

Network | Bullet

# ANO-L6082R

## 2MP IR Bullet Camera

## Key Features

- 2MP resolution, Up to 30fps(H.265/H.264)
- Color : 0.03Lux (F1.6, 1/30sec), B/W : 0Lux (IR LED On)
- 3.3~10.3mm(3.1x) motorized varifocal
- Day & Night (ICR), WDR (120dB)
- H.265, H.264, MJPEG, Multiple streaming supported
- Motion detection, Tampering, Virtual area(Intrusion/Enter/Exit), Virtual line(Crossing/Direction)
- Hallway view (90º/270º), LDC support, WiseStream II
- IP66

Design and specifications are subject to change without notice. The latest product information / specification can be found at HanwhaVision.com
Hanwha Vision is formerly known as Hanwha Techwin.

© Hanwha Vision CO., LTD. All rights reserved.

# ANO-L6082R

2MP IR Bullet Camera



## Specifications

### Video

| | | |
|---|---|---|
| **Imaging Device** | Size | 1/2.8" |
| | Type | CMOS |
| **Resolution** | | 1920x1080, 1280x960, 1280x720, 800x600, 800x448, 720x576, 720x480, 640x480, 640x360 |
| **Max. Framerate** | H.265/H.264 | 30fps/25fps(60Hz/50Hz) |
| | MJPEG | 10fps |
| **Min. Illumination (Lux)** | Color(1/30sec, 30IRE) | 0.03 |
| | BW(1/30sec, 30IRE) | 0.003 |

### Lens

| | | |
|---|---|---|
| **Focal Length (mm)** | | 3.3~10.3 |
| **Zoom Ratio** | Optical | 3.1x |
| **Max Aperture Ratio (F number)** | Wide | 1.6 |
| | Tele | 3.3 |
| **Angular Field of View** | Horizontal | 106°~30° |
| | Vertical | 55°~17° |
| | Diagonal | 127°~35° |
| **Min. Object Distance** | | 0.5m(1.64ft) |
| **Focus Control** | | Simple focus |
| **Lens Type** | | DC auto iris |

### Pan / Tilt / Rotate

| | | |
|---|---|---|
| **Pan / Tilt / Rotate Range** | Pan | 0°~360° |
| | Tilt | 0°~100° |
| | Rotate | 0°~360° |

### Operational

| | |
|---|---|
| **Day & Night** | Auto(ICR) |
| **Backlight Compensation** | BLC, WDR, SSDR |
| **Wide Dynamic Range (dB)** | 120 |

Design and specifications are subject to change without notice. The latest product information / specification can be found at HanwhaVision.com
Hanwha Vision is formerly known as Hanwha Techwin.

© Hanwha Vision CO., LTD. All rights reserved.

## Operational

| | | |
|---|---|---|
| **Digital Noise Reduction** | | SSNR |
| **Motion Detection** | Quantity | 4ea |
| | Shape | Rectangler zones |
| **Privacy Masking** | Quantity | 6ea |
| | Shape | Rectangular zones |
| **Gain Control** | | Low, Middle, High |
| **White Balance** | | ATW, AWC, Manual, Indoor, Outdoor |
| **LDC** | | Support |
| **Electronic Shutter** | Mode | Minimum, Maximum, Anti flicker |
| | Speed Range | 2~1/12,000sec |
| **Video Rotation** | | Flip, Mirror, Hallway view(90°/270°) |
| **Alarm Triggers** | | Analytics |
| **Alarm Events When Alarm Trigger Occurred** | | File upload(image): e-mail/FTP,<br>Notification: e-mail,<br>Recording: SD/SDHC/SDXC or NAS recording at event triggers |
| **Light Type** | | IR LED |
| **Light Viewable Length** | IR | 30m(98.43ft) |
| **IR Wavelength** | | 850nm |

## Analytics

| | | |
|---|---|---|
| **Analytics Events** | Normal | Motion detection, Tampering, Virtual area(Intrusion, Enter/Exit), Virtual line(Crossing, Direction) |

## Network

| | | |
|---|---|---|
| **Ethernet** | | RJ-45(10/100BASE-T) |
| **Video Compression** | | H.265: Main,<br>H.264: Main/High,MJPEG |
| **Smart Codec** | | WiseStream II |
| **Bitrate Control** | | H.265/H.264: CBR or VBR,<br>MJPEG: VBR |
| **Streaming** | Unicast | Up to 6 users |
| | Multicast | Support |
| | Multiple Streaming | Up to 3 profiles |
| **Protocol** | | IPv4, IPv6, TCP/IP, UDP/IP, RTP(UDP), RTP(TCP), RTCP, RTSP, NTP, HTTP, HTTPS, SSL/TLS, DHCP, FTP, SMTP, ICMP, IGMPv2, SNMPv1/v2c/v3(MIB-2), ARP, DNS, DDNS, QoS, UPnP, Bonjour |
| **Application Programming Interface** | ONVIF | S, G, T |
| | Others | SUNAPI(HTTP API) |
| **Direct Cloud Connection** | | Optional (needs gateway) |

Design and specifications are subject to change without notice. The latest product information / specification can be found at HanwhaVision.com
Hanwha Vision is formerly known as Hanwha Techwin.

© Hanwha Vision CO., LTD. All rights reserved.

## Security

| | |
|---|---|
| **OS / Firmware Protect** | Encrypted firmware |
| **User authentication** | Digest authentication, Prevent brute-force attack |
| **Network authentication** | IEEE 802.1X(EAP-TLS, EAP-LEAP, EAP-PEAP, MSCHAPv2) |
| **Secure Communication** | HTTPS, WSS(WebSocket Secure), SRTP |
| **Access Control** | IP-based access control |
| **Data Protect** | Encryption credentials, Encrypt compress for live recording file export |
| **Audit** | Access / System / Event Log management |
| **Device ID** | Device certificate(Hanwha Vision Root CA) |
| **Secure Storage** | SDcard partition encrypt(AES-256) |

## General

| | | |
|---|---|---|
| **Memory** | RAM | 512MB |
| | Flash | 256MB |
| **Edge Storage** | Micro SD/SDHC/SDXC | Max. 32GB x 1slot |

## Environmental & Electrical

| | | |
|---|---|---|
| **Operating Condition** | Temperature | -30°C~+55°C(-22°F~+131°F) |
| | Humidity | 0~95% RH(non-condensing) |
| | Others | Start up should be done at above -20°C |
| **Storage Condition** | Temperature | -30°C~+55°C(-22°F~+131°F) |
| | Humidity | 0~95% RH(non-condensing) |
| **Input Voltage** | | PoE(IEEE802.3af, Class3) |
| **Power Consumption** | PoE | Max. 7.0W, typical 5.0W |

## Mechanical

| | |
|---|---|
| **Color** | White |
| **Material** | Plastic |
| **RAL Code** | RAL9003 |
| **Product Dimensions** | ø78.0x262.0mm(ø3.07x10.31”) |
| **Product Weight** | 390g(0.86lb) |

## Certifications & Standards

| | |
|---|---|
| **EMC** | FCC 47 CFR 15 Subpart B Class A, ICES-3(A)/NMB-3(A), CE/UKCA - EN55032 Class A, EN 50130-4, EN 61000-3-2, EN 61000-3-3, VCCI CISPR 32 Class A, RCM AS-NZS CISPR 32 Class A, KS C 9832 Class A, KS C 9835 |
| **Safety** | UL 60950-1, CAN/CSA C22.2 NO. 60950-1, IEC 62471 |
| **Environment** | IEC/EN 63000, IEC 60529 IP66 |

Design and specifications are subject to change without notice. The latest product information / specification can be found at HanwhaVision.com
Hanwha Vision is formerly known as Hanwha Techwin.

© Hanwha Vision CO., LTD. All rights reserved.

## DORI (EN62676-4 standard)

| | | |
|---|---|---|
| **Detect (25PPM/ 8PPF)** | Wide | 28.9m(94.94ft) |
| | Tele | 143.3m(470.18ft) |
| **Observe (63PPM/ 19PPF)** | Wide | 11.6m(37.97ft) |
| | Tele | 57.3m(188.07ft) |
| **Recognize (125PPM/ 38PPF)** | Wide | 5.8m(18.99ft) |
| | Tele | 28.7m(94.04ft) |
| **Identify (250PPM/ 76PPF)** | Wide | 2.9m(9.49ft) |
| | Tele | 14.3m(47.02ft) |

Design and specifications are subject to change without notice. The latest product information / specification can be found at HanwhaVision.com
Hanwha Vision is formerly known as Hanwha Techwin.

© Hanwha Vision CO., LTD. All rights reserved.

# ANO-L6082R

2MP IR Bullet Camera



## CAD

**Unit:** mm [inch]

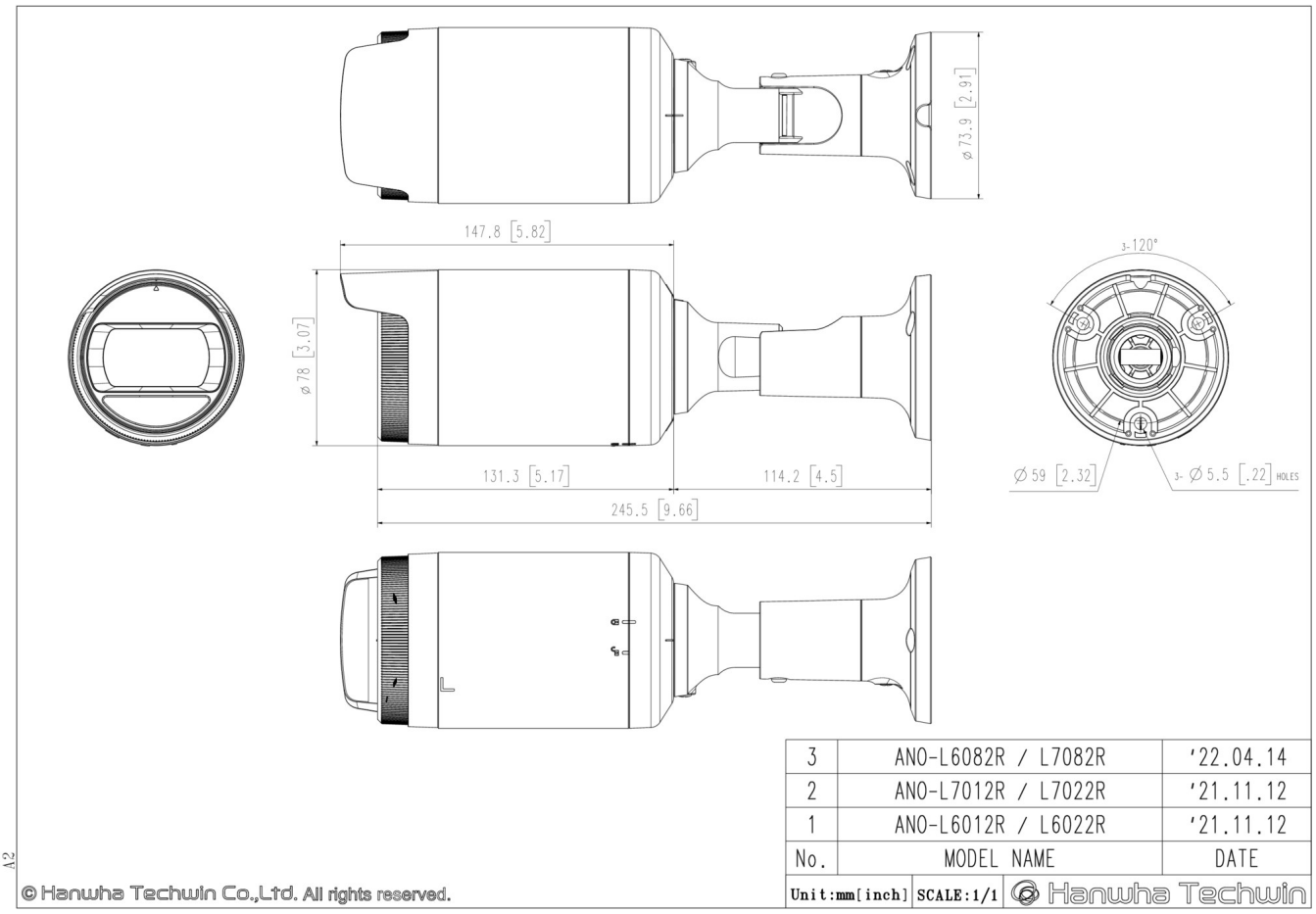


Design and specifications are subject to change without notice. The latest product information / specification can be found at HanwhaVision.com
Hanwha Vision is formerly known as Hanwha Techwin.

© Hanwha Vision CO., LTD. All rights reserved.