Thank you for giving UL the opportunity to partner with you.
Please note, Follow-Up Procedure Revisions or Report Revisions do not include Authorization Pages, Indices, Section General, and/or Appendices unless revisions were required or requested.

Should you have any questions, after reviewing the material, or need to report any inaccuracies, please reach out to your UL representative or find UL contact details for your local Customer Service Department at https://www.ul.com/about/locations.

Please find attached the related material

For your convenience, the below describes the related updates:

If there are illegible images in this package, legible images may be found online via myUL Portal.

E158873-volX1-Index
E158873-20190517A-CertificateofCompliance
E158873-A250-DescriptionUL
Figure-14-Total
E158873-A250-TestRecordUL

This material is provided on behalf of UL LLC (UL) or any authorized licensee of UL.

Times change, Trust Remains™

Index

Product Type	Model/Type Reference	Report Reference #	Status
Digital Video Recorder	SVR-430	E158873-A2-UL	
Video Presenter	UF-80, UF-80DX, UF-80ST	E158873-A4-UL	
Video Presenter	SVP-5300N	E158873-A5-UL	
Video Presenter	SDP-900DXAN, SDP-950DXAN, SDP-950STAN	E158873-A6-UL	
Video Presenter	SDP-850, SDP-850DX	E158873-A9-UL	
Digital Video Recorder	SVR-1650, SVR-1650E, SVR-1640, SVR-1640E, SVR-950, SVR-950E and SVR-1640A	E158873-A11-UL	
Video Presenter	SDP-6500DXA	E158873-A12-UL	
Video Presenter	UF-130DX	E158873-A14-UL	
Video Presenter	UF-130ST	E158873-A15-UL	
Network Video Recorder	SNR-6400, SNR-3200, SRN-3250, SRN-6450	E158873-A16-UL	
Digital Video Recorder.	SVR-480	E158873-A17-UL	Withdrawn
Video Presenter	SDP-860	E158873-A18-UL	
Digital Video Recorder.	SVR-1670	E158873-A19-UL	
UTP Power Supply Unit	SPU-400	E158873-A20-UL	Withdrawn
Digital Presenter	SDP-760	E158873-A44-UL	
Network Camera	SNP-5300H*, SNP-6201H* (* is Blank or N or P: N = NTSC, P=PAL)	E158873-A45-UL	
Network Camera	SND-7011*, SND-5011*, SND-5061*, SND-7061*, SNV-5010*, SNZ-5200* (* is blank or N or P: N = NTSC, P=PAL)	E158873-A46-UL	
Network Camera	SNP-5300*, SNP-6201* (* is blank or N or P: N = NTSC, P=PAL)	E158873-A47-UL	
Digital Color Camera	SCP-3371H*, SCP-2371H*, SCP-2271H*, SCP-2373H*, SCP-2273H* (* is blank or N or P: N = NTSC, P=PAL)	E158873-A48-UL	
Digital Color Camera	SCP-3371*, SCP-2371*, SCP-2271*, SCP-2373*, SCP-2273* (* is blank or N or P: N = NTSC, P=PAL)	E158873-A49-UL	
Network Camera	SND-7082*, SND-7082F*, SNV-7082* (* is blank or N or P: N = NTSC, P=PAL)	E158873-A50-UL	
Network Camera	SNB-7001*, SNB-5001*, SNB-3002* (* is blank or N or P: N = NTSC, P=PAL)	E158873-A51-UL	
Network Camera	SNO-7082R* (* is blank or N or P: N = NTSC, P=PAL)	E158873-A52-UL	
Network Camera	SNB-7002* (* is blank or N or P: N = NTSC, P=PAL)	E158873-A53-UL	

DIGITAL COLOR CAMERA	SCV-2010F*, SCD-1020R*, SCD-2080R*, SCD-2020R*, SCD-2010*, SCD-2010B*, SCD-2010F*, SCB-3020*, SCB-3021*, SCB-2010*, SCO-1020R* (* is blank or N or P: N=NTSC, P=PAL)	E158873-A54-UL	
Network Camera	SNB-6004*, SNB-6003*, SNB-5004*, SNB-5003*, SNB-7004*, SNB-6005* (* is blank or N or P: N = NTSC, P=PAL)	E158873-A55-UL	
Network Camera	SND-6084*, SND-6083*, SND-5084*, SND-5083*, SND-7084* (* is blank or N or P: N = NTSC, P=PAL)	E158873-A56-UL	
DIGITAL COLOR CAMERA	SCD-2022*, SCD-2022R*, SCD-2042R* (* is blank or N or P: N = NTSC, P=PAL)	E158873-A58-UL	
Digital Color Camera	SCB-2004*, SCB-2005* (* is blank or N or P: N = NTSC, P=PAL);	E158873-A59-UL	
Digital Color Camera	SCD-2082*, SCV-2082R*, SCV-3083*, SCD-3083* (* is blank or N or P: N = NTSC, P=PAL)	E158873-A60-UL	
Network Camera	SND-6084R*, SND-7084R*, SND-5084R* (* is blank or N or P: N = NTSC, P=PAL)	E158873-A61-UL	
NETWORK CAMERA	SNO-6084R*. SNO-7084R* (* is blank or N or P: N = NTSC, P=PAL)	E158873-A62-UL	
Network Camera	SNV-6084R*, SNV-6084*, SNV-5084*, SNV-7084*, SNV-7084R*, SNV-5084R*, SNV-6084T* (* is blank or N or P: N = NTSC, P=PAL)	E158873-A63-UL	
Digital Color Camera	SCO-2081R* (* is blank or N or P: N = NTSC, P=PAL)	E158873-A64-UL	
DIGITAL COLOR CAMERA	SCB-2004*D, SCB-2005*D (* is blank or N or P: N = NTSC, P=PAL)	E158873-A65-UL	
DIGITAL VIDEO RECORDER	SRD-1673D*, SRD-1654D*, SRD-854D*, SRD-852D*, SRD-1673*, SRD-1653*, SRD-873*, SRD-1640*, SRD-840*(* is blank or N or P, N=NTSC / P=PAL)	E158873-A66-UL	
Network Camera	SNP-6200RH*, SCP-2370RH* (* is blank or N or P: N=NTSC,P=PAL)	E158873-A67-UL	
Network Camera	SNV-6012M* (* is blank or N or P: N = NTSC, P=PAL)	E158873-A68-UL	
Network Camera	SNF-7010*, SNF-7010V*, SNF-7010VM* (* is blank or N or P: N = NTSC, P=PAL)	E158873-A69-UL	

Network Camera	SNO-6011R* (* is blank or N or P: N = NTSC, P=PAL)	E158873-A72-UL	
Network Camera	SND-6011R* (* is blank or N or P: N = NTSC, P=PAL)	E158873-A73-UL	
Digital Video Recorder	SRD-1680D*, SRD-880D* (* is blank or N or P : N=NTSC, P=PAL)	E158873-A74-UL	
DIGITAL COLOR CAMERA	SCZ-2373*, SCZ-2273* (* is blank or N or P: N = NTSC, P=PAL)	E158873-A75-UL	
NETWORK CAMERA	SCO-6081R* (* is blank or N or P: N = NTSC, P=PAL)	E158873-A76-UL	
DIGITAL COLOR CAMERA	SCV-6081R* and SCD-6081R* (* is blank or N or P: N = NTSC, P=PAL)	E158873-A77-UL	
NETWORK VIDEO RECORDER	SRN-4000	E158873-A78-UL	
DIGITAL COLOR CAMERA	SCD-6021* (* is blank or N or P: N = NTSC, P=PAL)	E158873-A81-UL	
NETWORK CAMERA	SNV-6013* (* is blank or N or P: N = NTSC, P=PAL)	E158873-A83-UL	
NETWORK CAMERA	SNB-6010*, SNB-6010A*, SNB-6011*, SNB-6010B*, SNB-6011B* (* is blank or N or P: N = NTSC, P=PAL)	E158873-A85-UL	
NETWORK CAMERA	SNP-6320H*, SNP-5430H* (* is blank or N or P: N = NTSC, P=PAL)	E158873-A86-UL	
NETWORK CAMERA	SNP-6320*, SNP-5430* (* is blank or N or P: N = NTSC, P=PAL)	E158873-A87-UL	
Network Video Recorder	SRN-472S, XRN-810S* (* is blank or N or P: N = NTSC, P=PAL)	E158873-A88-UL	
Digital Video Recorder	SRD-1676D*, SRD-1656D*, SRD-876D* (* is blank or N or P, N=NTSC/ P=PAL)	E158873-A89-UL	
DIGITAL COLOR CAMERA	SCB-5000* (* is blank or N or P: N = NTSC, P=PAL)	E158873-A90-UL	
DIGITAL COLOR CAMERA	SCB-5000*D (* is blank or N or P: N = NTSC, P=PAL)	E158873-A91-UL	
DIGITAL COLOR CAMERA	SCD-5080* (* is blank or N or P: N = NTSC, P=PAL)	E158873-A92-UL	
DIGITAL COLOR CAMERA	SCB-5003*, SCB-5005*, HCB-6001* (* is blank or N or P: N = NTSC, P=PAL)	E158873-A94-UL	
DIGITAL COLOR CAMERA	SCV-5082* (* is blank or N or P: N = NTSC, P=PAL)	E158873-A95-UL	
DIGITAL COLOR CAMERA	SCD-5083*, SCD-5083R*, SCD-5082*, SCD-5083B*, SCD-5081R* (* is blank or N or P: N = NTSC, P=PAL)	E158873-A96-UL	
DIGITAL COLOR CAMERA	SCV-5083* (* is blank or N or P: N = NTSC, P=PAL)	E158873-A97-UL	

	SCV-5083R* (* is blank or N or P: N = NTSC, P=PAL) SCV-5081R* (* is blank or N or P: N = NTSC, P=PAL)		
NETWORK CAMERA	SNF-8010VM*, SNF-8010* (* is blank or N or P: N = NTSC, P=PAL)	E158873-A98-UL	
DIGITAL COLOR CAMERA	SCD-5030*, SCD-5020* (* is blank or N or P: N = NTSC, P=PAL)	E158873-A99-UL	
NETWORK CAMERA	SNO-5084R* (* is blank or N or P: N = NTSC, P=PAL)	E158873-A100-UL	
DIGITAL COLOR CAMERA	SCO-5083R*, SCO-5081R* (* is blank or N or P: N = NTSC, P=PAL)	E158873-A101-UL	
NETWORK CAMERA	SNP-6321*, SNP-L6233* (* is blank or N or P: N = NTSC, P=PAL)	E158873-A102-UL	
NETWORK CAMERA	SNP-6321H*, SNP-L6233H* (* is blank or N or P: N = NTSC, P=PAL)	E158873-A103-UL	
DIGITAL COLOR CAMERA	SCV-5085* (* is blank or N or P: N = NTSC, P=PAL)	E158873-A104-UL	
NETWORK CAMERA	SNB-8000* (* is blank or N or P: N = NTSC, P=PAL)	E158873-A105-UL	
NETWORK CAMERA	SNV-8080* (* is blank or N or P: N = NTSC, P=PAL)	E158873-A106-UL	
NETWORK CAMERA	SNZ-6320	E158873-A107-UL	
NETWORK CAMERA	SNP-6320RH*, SNP-L6233RH* (* is blank or N or P: N=NTSC,P=PAL)	E158873-A108-UL	
NETWORK CAMERA	SNP-5321H*, SNP-L5233H* (* is blank or N or P: N = NTSC, P=PAL)	E158873-A109-UL	
NETWORK CAMERA	SNP-5321*, SNP-L5233* (* is blank or N: NTSC or P:PAL)	E158873-A110-UL	
NETWORK CAMERA	SND-L6013R*, SND-L6013*, SND-L6012*, SND-L5013* (* is blank or N or P: N:NTSC/ P:PAL)	E158873-A111-UL	
NETWORK CAMERA	SNO-L6083R*, SNO-L5083R* (* is blank or N or P: N = NTSC, P=PAL)	E158873-A113-UL	
Network Video Recorder	SRN-1673S*(* is blank or N or P: N = NTSC, P=PAL)	E158873-A115-UL	
NETWORK CAMERA	SNO-L6013R* (* is blank or N or P: N = NTSC, P=PAL)	E158873-A118-UL	
NETWORK CAMERA	SND-L6083R*, SND-L5083R* (* is blank or N or P: N = NTSC, P=PAL)	E158873-A119-UL	
Network Video Recorder	SRN-873S* (* is blank or N or P: N = NTSC, P=PAL)	E158873-A120-UL	

NETWORK CAMERA	SNV-L6083R*, SNV-L5083R* (* is blank or N or P: N = NTSC, P=PAL)	E158873-A121-UL	
NETWORK CAMERA	SNB-9000* (* is blank or N or P: N = NTSC, P=PAL)	E158873-A122-UL	
Optical PTZ Accessary	SBP-301HF	E158873-A125-UL	
Optical PTZ Accessary	SBP-300HF	E158873-A126-UL	
NETWORK CAMERA	SNV-8081R* (* is Blank or N or P: N = NTSC, P=PAL)	E158873-A127-UL	
NETWORK CAMERA	SNO-8081R* (* is blank or N or P: N = NTSC, P=PAL)	E158873-A128-UL	
NETWORK CAMERA	SNV-6085R* (* is blank or N or P: N = NTSC, P=PAL) SNV-6085* (* is blank or N or P: N = NTSC, P=PAL)	E158873-A129-UL	
DIGITAL COLOR CAMERA	SCB-6003* (* is blank or N or P: N = NTSC, P=PAL)	E158873-A130-UL	
DIGITAL COLOR CAMERA	SCO-6023R* (* is blank or N or P: N = NTSC, P=PAL)	E158873-A132-UL	
DIGITAL COLOR CAMERA	SCV-6083R* (* is blank or N or P: N = NTSC, P=PAL)	E158873-A133-UL	
DIGITAL COLOR CAMERA	SCV-6023R* (* is blank or N or P: N = NTSC, P=PAL)	E158873-A135-UL	
DIGITAL COLOR CAMERA	SCD-6023R*, SCD-6013* (* is blank or N or P: N = NTSC, P=PAL)	E158873-A136-UL	
DIGITAL COLOR CAMERA	SCD-6083R* (* is blank or N or P: N = NTSC, P=PAL)	E158873-A137-UL	
DIGITAL COLOR CAMERA	SCO-6083R*(* is blank or N or P: N = NTSC, P=PAL)	E158873-A138-UL	
NETWORK CAMERA	SNV-L6014RM*, SNV-L6013R* (* is blank or N or P: N = NTSC, P=PAL)	E158873-A139-UL	
DIGITAL COLOR CAMERA	PNO-9080R* (* is blank or N or P: N = NTSC, P=PAL)	E158873-A140-UL	
NETWORK CAMERA	PNV-9080R* (* is blank or N or P: N = NTSC, P=PAL)	E158873-A141-UL	
NETWORK CAMERA	PND-9080R* (* is blank or N or P: N = NTSC, P=PAL)	E158873-A142-UL	
Digital Video Recorder	SRD-1685*, SRD-894*, HRD-842* (* is blank or N or P, N=NTSC/ P=PAL)	E158873-A143-UL	
Digital Video Recorder	SRD-1694*, HRD-1642* (* is blank or N or P, N=NTSC/ P=PAL)	E158873-A144-UL	
Network Video Recorder (NVR)	XRN-2011*, XRN-2010*, XRN-3010*, XRN-1610* (* is blank or N or P: N=NTSC, P=PAL) XRN-2010P/DM, XRN-3010P/DM, XRN-3010A, XRN-2011A, XRN-2010A, XRN-1610A	E158873-A146-UL	
NETWORK CAMERA	QNO-7030R*, QNO-7020R*, QNO-7010R*, QNO-6030R*,	E158873-A147-UL	

	QNO-6020R*, QNO-6010R*, QNO-6070R*, QNO-7080R*, QNO-6071R* (* is blank or N or P: N = NTSC, P=PAL)		
NETWORK CAMERA	QND-7030R*, QND-7020R*, QND-7010R*, QND-6030R*, QND-6020R*, QND-6010R*, QND-6070R*, QND-7080R* (* is blank or N or P: N = NTSC, P=PAL)	E158873-A148-UL	
NETWORK CAMERA	QNV-7030R*, QNV-7020R*, QNV-7010R*, QNV-6030R*, QNV-6020R*, QNV-6010R*, QNV-6070R*, QNV-7080R* (* is blank or N or P: N = NTSC, P=PAL)	E158873-A149-UL	
Network Video Recorder	XRN-1610S* (* is blank or N or P: N=NTSC, P=PAL) XRN-1610SP/DM, XRN-1610SA	E158873-A150-UL	
NETWORK CAMERA	PNF-9010RV*, PNF-9010R*, PNF-9010RVM* (* is blank or N or P: N = NTSC, P=PAL)	E158873-A151-UL	
NETWORK CAMERA	PNM-9020V* (* is blank or N or P: N = NTSC, P=PAL)	E158873-A152-UL	
Network Video Recorder	PRN-4011* (* is blank or N or P: N=NTSC, P=PAL)	E158873-A153-UL	
DIGITAL COLOR CAMERA	HCP-6320*, HCP-6320A*, HCP-6230* (* is blank or N or P: N = NTSC, P=PAL)	E158873-A154-UL	
DIGITAL COLOR CAMERA	HCP-6320H*, HCP-6320HA*, HCP-6230H* (* is blank or N or P: N = NTSC, P=PAL)	E158873-A155-UL	
NETWORK CAMERA	PNP-9200RH*, XNP-6370RH*, XNP-6330RH* (* is blank or N or P: N=NT, P=PAL)	E158873-A156-UL	
NETWORK CAMERA	XNB-8000*, XNB-6000* (* is blank or N or P: N = NTSC, P=PAL)	E158873-A157-UL	
NETWORK CAMERA	XNO-8080R*, XNO-6080R*, XNO-6120R* (* is blank or N or P: N = NTSC, P=PAL)	E158873-A158-UL	
NETWORK CAMERA	XNV-8040R*, XNV-8030R*, XNV-8020R*, XNV-6020*, XNV-6010*, XNV-6020R* (* is blank or N or P: N = NTSC, P=PAL)	E158873-A159-UL	
NETWORK CAMERA	XND-8040R*, XND-8030R*, XND-8020R*, XND-6020*, XND-6010*, XND-6020R* (* is blank or N or P: N = NTSC, P=PAL)	E158873-A160-UL	
NETWORK CAMERA	XNV-8080R*, XNV-6080R*, XNV-6080*, XNV-6120R*, XNV-6120* (* is blank or N or P: N = NTSC, P=PAL) , XNV-8080RS, XNV-6080RS, XNV-6120RS,	E158873-A161-UL	

	XNV-6120RSA, XNV-6080RSA, XNV-8080RSA		
NETWORK CAMERA	XND-8080RV*, XND-8080R*, XND-6080RV*, XND-6080R*, XND-6080V*, XND-6080* (* is blank or N or P: N = NTSC, P=PAL)	E158873-A162-UL	
AHD Multi Directional Camera	HCM-9020VQ* (is blank or N or P: N = NTSC, P=PAL)	E158873-A163-UL	
NETWORK CAMERA	XNO-8020R*, XNO-8030R*, XNO-8040R*, XNO-6010R*, XNO-6020R* (* is blank or N or P: N = NTSC, P=PAL)	E158873-A164-UL	
NETWORK CAMERA	XNV-6011* (* is blank or N or P: N = NTSC, P=PAL)	E158873-A165-UL	
DIGITAL COLOR CAMERA	HCD-6080R*, HCD-6070R*, SCD-6085R* (* is blank or N or P: N = NTSC, P=PAL)	E158873-A167-UL	
DIGITAL COLOR CAMERA	HCV-6080R*, HCV-6070R*, SCV-6085R* (* is blank or N or P: N = NTSC, P=PAL)	E158873-A168-UL	
NETWORK CAMERA	XNP-6120H* (* is blank or N or P: N = NTSC, P=PAL)	E158873-A169-UL	
NETWORK CAMERA	XND-8020F*, XND-6011F* (* is blank or N or P: N = NTSC, P=PAL)	E158873-A170-UL	
NETWORK CAMERA	PNM-9080VQ* (* is blank or N or P: N = NTSC, P = PAL)	E158873-A172-UL	
Network Storage	SRB-160S	E158873-A173-UL	
NETWORK CAMERA	TNB-6030* (* is blank or N or P: N = NTSC, P = PAL)	E158873-A174-UL	
NETWORK CAMERA	PNM-9081VQ* (* is blank or N or P: N = NTSC, P = PAL)	E158873-A176-UL	
NETWORK CAMERA	XNO-6085R* (* is blank or N or P: N = NTSC, P=PAL)	E158873-A177-UL	
NETWORK CAMERA	XNB-6005* (* is blank or N or P: N = NTSC, P=PAL)	E158873-A178-UL	
NETWORK VIDEO RECORDER	SNR-D5401N	E158873-A179-UL	
NETWORK CAMERA	XND-6085*, XND-6085V* (* is blank or N or P: N = NTSC, P=PAL)	E158873-A180-UL	
NETWORK CAMERA	XNV-6085* (* is blank or N or P: N = NTSC, P=PAL)	E158873-A181-UL	
NETWORK CAMERA	XNP-6040H* (* is blank or N or P: N = NTSC, P=PAL)	E158873-A182-UL	
NETWORK VIDEO DECODER	SPD-150* (* is blank or N or P: N = NTSC, P=PAL), SPD-151	E158873-A184-UL	
DIGITAL COLOR CAMERA	HCB-6000*, HCB-7000*, SCB-6005* (* is blank or N or P: N = NTSC, P=PAL)	E158873-A185-UL	
DIGITAL COLOR CAMERA	HCZ-6320*, HCZ-6321* (* is blank or N or P: N = NTSC, P=PAL)	E158873-A186-UL	

NETWORK CAMERA	XNF-8010RVM*, XNF-8010RV*, XNF-8010R*, XNF-8010RW, XNF-8010RVMNB (* is blank or N or P: N = NTSC, P=PAL)	E158873-A187-UL	
DIGITAL COLOR CAMERA	HCO-6070R*, HCO-6080R* (* is blank or N or P: N = NTSC, P=PAL)	E158873-A188-UL	
NETWORK CAMERA	XNB-6001* (* is blank or N or P: N = NTSC, P=PAL)	E158873-A189-UL	
DIGITAL COLOR CAMERA	HCO-7070R* (* is blank or N or P: N = NTSC, P=PAL)	E158873-A190-UL	
LENS MODULE	SLA-T2480*, SLA-T2480V*, SLA-T4680*, SLA-T4680V*, SLA-T4680D, SLA-T4680DW, SLA-T4680DS, SLA-T2415, SLA-T2815B, SLA-T2480A, SLA-T2480VA, SLA-T4680A, SLA-T4680VA (* is blank or N or P: N = NTSC, P=PAL)	E158873-A191-UL	
DIGITAL COLOR CAMERA	HCD-7070R* (* is blank or N or P: N = NTSC, P=PAL)	E158873-A192-UL	
DIGITAL COLOR CAMERA	HCV-7070R* (* is blank or N or P: N = NTSC, P=PAL)	E158873-A193-UL	
NETWORK VIDEO RECORDER	TRM-1610S	E158873-A194-UL	
LENS MODULE	SLA-T1080F*, SLA-T1080FA (* is blank or N or P: N = NTSC, P=PAL)	E158873-A195-UL	
NETWORK SWITCH	SPN-10080P, SPN-10080PM	E158873-A196-UL	
ANALOG CAMERA	HCV-7010R*, HCV-7020R*, HCV-7030R* (* is blank or N or P: N = NTSC, P=PAL)	E158873-A197-UL	
DIGITAL COLOR CAMERA	HCD-7010R*, HCD-7020R*, HCD-7030R* (* is blank or N or P: N = NTSC, P=PAL)	E158873-A198-UL	
DIGITAL COLOR CAMERA	HCO-7010R*, HCO-7020R* , HCO-7030R* (* is blank or N or P: N = NTSC, P=PAL)	E158873-A199-UL	
NETWORK CAMERA	XNP-6320, QNP-6230, XNP-6321	E158873-A200-UL	
NETWORK CAMERA	XNP-6320H, XNP-6320HS, QNP-6230H, XNP-6321H	E158873-A201-UL	
NETWORK THERMAL CAMERA	TNO-4050T, TNO-4030T, TNO-4040T	E158873-A202-UL	
NETWORK THERMAL CAMERA	TNO-4051T, TNO-4041T	E158873-A204-UL	
NETWORK CAMERA	XNV-6013M	E158873-A205-UL	
NETWORK CAMERA	XNV-6012M, XNV-6012	E158873-A206-UL	
NETWORK CAMERA	XNV-6022R, XNV-6022RM	E158873-A207-UL	
NETWORK CAMERA	LNO-6070R, LNO-6071R	E158873-A208-UL	
NETWORK CAMERA	LNO-6030R, LNO-6020R, LNO-6010R, LNO-6031R, LNO-	E158873-A209-UL	

	6021R, LNO-6011R, LNO-6011RW		
NETWORK CAMERA	LNV-6070R, LNV-6071R	E158873-A210-UL	
NETWORK CAMERA	LND-6070R, LND-6071R	E158873-A213-UL	
NETWORK CAMERA	LNV-6030R, LNV-6020R, LNV-6010R, LNV-6031R, LNV-6021R, LNV-6011R	E158873-A214-UL	
NETWORK CAMERA	LND-6030R, LND-6020R, LND-6010R, LND-6031R, LND-6021R, LND-6011R.	E158873-A215-UL	
NETWORK CAMERA	XNV-L6080R, XNV-L6080	E158873-A216-UL	
NETWORK CAMERA	XND-L6080RV, XND-L6080R, XND-L6080V	E158873-A217-UL	
NETWORK CAMERA	XNO-L6080R	E158873-A218-UL	
NETWORK CAMERA	PNM-7000VD	E158873-A220-UL	
NETWORK VIDEO ENCODER	SPE-410, SPE-410A* (* is Blank or N or P, N = NTSC, P = PAL)	E158873-A222-UL	
NETWORK VIDEO ENCODER	SPE-1610, SPE-1610A* (* is Blank or N or P, N = NTSC, P = PAL), NVE3016	E158873-A223-UL	
NETWORK POSITIONING CAMERA	TNU-6320, TNU-6321	E158873-A224-UL	
Network Video Recorder	QRN-1610S, QRN-1620S, LRN-1610S	E158873-A225-UL	
NETWORK CAMERA	QNE-7080RV, QNE-6080RV	E158873-A226-UL	
NETWORK CAMERA	PNM-9000VQ	E158873-A227-UL	
Network Camera	XNP-6550RH, XNP-6320RH, XNP-6250RH, QNP-6230RH	E158873-A229-UL	
NETWORK CAMERA	PNM-9320VQP, PNM-9321VQP.	E158873-A230-UL	
NETWORK CAMERA	XNZ-6320	E158873-A231-UL	
NETWORK ENCODER	SPE-110N, SPE-110A* (* is Blank or N or P, N = NTSC, P = PAL)	E158873-A232-UL	
THERMAL POSITIONING CAMERA	TNU-4041T, TNU-4051T	E158873-A233-UL	
NETWORK CAMERA	PNM-9030V	E158873-A234-UL	
NETWORK CAMERA	TNV-7010RC	E158873-A235-UL	
NETWORK CAMERA	XND-8081VZ, XND-8081FZ, XND-6081VZ, XND-6081FZ	E158873-A236-UL	
DIGITAL COLOR CAMERA	HCF-8010V	E158873-A239-UL	
ANALOG CAMERA	HCO-6020R	E158873-A241-UL	
NETWORK CAMERA	XNV-6081, XNV-6081R, XNV-8081R	E158873-A242-UL	
NETWORK VIDEO RECORDER	TRM-810S, TRM-410S	E158873-A243-UL	
ANALOG CAMERA	HCD-6020R, HCD-6010	E158873-A244-UL	

NETWORK CAMERA	XND-6081V, XND-6081F, XND-6081RV, XND-6081RF, XND-8081RV, XND-8081RF	E158873-A245-UL	
NETWORK CAMERA	XND-L6080	E158873-A246-UL	
NETWORK CAMERA	TNO-6010M	E158873-A247-UL	
ANALOG CAMERA	SCO-6085R	E158873-A248-UL	
NETWORK CAMERA	PNM-9000VD, PNM-7002VD	E158873-A249-UL	
NETWORK CAMERA	QND-6083R, QND-6082R, QND-6073R, QND-6072R, QND-6032R, QND-6022R, QND-6012R, QND-6012R1, QND-6022R1, QND-6032R1, QND-6072R1, QND-6082R1	E158873-A250-UL	
NETWORK CAMERA	QNE-8021R, QNE-8011R	E158873-A251-UL	
NETWORK CAMERA	QND-8021, QND-8011	E158873-A252-UL	
NETWORK CAMERA	QNO-8080R, QNO-8010R, QNO-8020R, QNO-8030R	E158873-A253-UL	
NETWORK CAMERA	QND-6021, QND-6011	E158873-A254-UL	
NETWORK CAMERA	QNO-6083R, QNO-6082R, QNO-6012R, QNO-6022R, QNO-6032R, QNO-6072R, QNO-6073R, QNO-6012R1, QNO-6022R1, QNO-6032R1, QNO-6072R1, QNO-6082R1	E158873-A255-UL	
NETWORK CAMERA	QNV-6083R, QNV-6082R, QNV-6073R, QNV-6072R, QNV-6012R, QNV-6022R, QNV-6032R, QNV-6012RA, QNV-6012R1, QNV-6022R1, QNV-6032R1, QNV-6072R1, QNV-6082R1	E158873-A256-UL	
NETWORK CAMERA	QNV-8080R, QNV-8010R, QNV-8020R, QNV-8030R	E158873-A257-UL	
NETWORK CAMERA	QND-8080R, QND-8010R, QND-8020R, QND-8030R	E158873-A258-UL	
NETWORK CAMERA	QNF-8010	E158873-A259-UL	
NETWORK CAMERA	LNV-6012R, LNV-6022R, LNV-6032R	E158873-A260-UL	
NETWORK CAMERA	LNV-6072R	E158873-A261-UL	
NETWORK CAMERA	LND-6012R, LND-6022R, LND-6032R	E158873-A262-UL	
NETWORK CAMERA	LND-6072R	E158873-A263-UL	
NETWORK CAMERA	QNV-6024RM, QNV-6023R	E158873-A264-UL	
NETWORK CAMERA	LNO-6012R, LNO-6022R, LNO-6032R	E158873-A265-UL	
NETWORK CAMERA	LNO-6072R	E158873-A266-UL	
Digital Video Recorder	HRX-1621* (* is Blank or N or P : P=PAL, N=NTSC)	E158873-A267-UL	
Digital Video Recorder	HRX-821* (* is Blank or N or P : P=PAL, N=NTSC)	E158873-A268-UL	
NETWORK THERMAL CAMERA	TNO-3010T, TNO-3020T, TNO-3030T	E158873-A269-UL	
NETWORK CAMERA	PNM-9084QZ	E158873-A270-UL	

NETWORK CAMERA	XNP-6371RH	E158873-A275-UL	
NETWORK CAMERA	XNZ-L6320	E158873-A276-UL	
NETWORK CAMERA	PNM-9084RQZ*, PNM-9085RQZ* (* is Blank or N or P : P=PAL, N=NTSC)	E158873-A6001-UL	
NETWORK VIDEO RECORDER	WRN-1610S	E158873-A6002-UL	
NETWORK VIDEO RECORDER	WRN-810S* (* is Blank or N or P : P=PAL, N=NTSC)	E158873-A6003-UL	
NETWORK CAMERA	PNB-A9001, PNB-A9001LP, PNB-A9001OP	E158873-A6005-UL	
NETWORK CAMERA	TNB-9000	E158873-A6006-UL	
NETWORK CAMERA	PNO-A9081R, PNO-A9081RLP, PNO-A9081ROP	E158873-A6007-UL	
NETWORK CAMERA	PNV-A9081R, PNV-A9081RLP, PNV-A9081ROP	E158873-A6008-UL	
NETWORK CAMERA	PND-A9081RF	E158873-A6009-UL	
NETWORK CAMERA	QNB-8002	E158873-A6010-UL	
NETWORK CAMERA	QNB-6002	E158873-A6011-UL	
NETWORK CAMERA	PND-A9081RV	E158873-A6012-UL	
NETWORK CAMERA	QNF-9010	E158873-A6013-UL	
NETWORK CAMERA	XNV-8081RE, XNV-6081RE, XND-8081REV, XND-6081REV	E158873-A6014-UL	
NETWORK CAMERA	XNB-9002, XNB-8002	E158873-A6022-UL	
NETWORK CAMERA	XNV-9082R, XNV-8082R	E158873-A6023-UL	
NETWORK CAMERA	XNO-9082R, XNO-8082R	E158873-A6024-UL	
NETWORK CAMERA	XND-9082RV, XND-8082RV, XND-9082RF, XND-8082RF	E158873-A6025-UL	

CERTIFICATE OF COMPLIANCE

Certificate Number	UL-CA-L158873-28X1A250-71509102-2
Report Reference	E158873-20190517
Date	6-Sep-2021
Issued to:	Hanwha Techwin Co Ltd 6, Pangyo-ro 319beon-gil, Bundang-gu Seongnam-si, Gyeonggi-do Republic of Korea 13488
This is to certify that representative samples of	NWGQ7 - Information Technology Equipment Including Electrical Business Equipment Certified for Canada See Addendum Page for Product Designation(s).
	Have been investigated by UL in accordance with the Standard(s) indicated on this Certificate.
Standard(s) for Safety:	CSA C22.2 No. 60950-1 - 2nd Ed. - Issue Date: 2007-03-27 - Revision Date: 2014-10-01
Additional Information:	See the UL Online Certifications Directory at https://iq.ulprospector.com for additional information

This Certificate of Compliance does not provide authorization to apply the UL Mark. Only the UL Follow-Up Services Procedure provides authorization to apply the UL Mark.

Only those products bearing the UL Mark should be considered as being UL Certified and covered under UL's Follow-Up Services.

Look for the UL Certification Mark on the product.

Bruce Mahrenholz, Director North American Certification Program

UL LLC

Any information and documentation involving UL Mark services are provided on behalf of UL LLC (UL) or any authorized licensee of UL. For questions, please contact a local UL Customer Service Representative at http://ul.com/aboutul/locations/

CERTIFICATE OF COMPLIANCE

Certificate Number UL-CA-L158873-28X1A250-71509102-2
Report Reference E158873-20190517
Date 6-Sep-2021

This is to certify that representative samples of the product as specified on this certificate were tested according to the current UL requirements

Model	Category Description
QND-6012R	NETWORK CAMERA
QND-6012R1	NETWORK CAMERA
QND-6022R	NETWORK CAMERA
QND-6022R1	NETWORK CAMERA
QND-6032R	NETWORK CAMERA
QND-6032R1	NETWORK CAMERA
QND-6072R	NETWORK CAMERA
QND-6072R1	NETWORK CAMERA
QND-6073R	NETWORK CAMERA
QND-6082R	NETWORK CAMERA
QND-6082R1	NETWORK CAMERA
QND-6083R	NETWORK CAMERA

Bruce Mahrenholz, Director North American Certification Program

UL LLC

Any information and documentation involving UL Mark services are provided on behalf of UL LLC (UL) or any authorized licensee of UL. For questions, please contact a local UL Customer Service Representative at http://ul.com/aboutul/locations/

CERTIFICATE OF COMPLIANCE

Certificate Number	UL-US-L158873-26X1A250-71509102-2
Report Reference	E158873-20190517
Date	6-Sep-2021
Issued to:	Hanwha Techwin Co Ltd 6, Pangyo-ro 319beon-gil, Bundang-gu Seongnam-si, Gyeonggi-do Republic of Korea 13488
This is to certify that representative samples of	NWGQ - Information Technology Equipment Including Electrical Business Equipment See Addendum Page for Product Designation(s).
	Have been investigated by UL in accordance with the Standard(s) indicated on this Certificate.
Standard(s) for Safety:	UL 60950-1, 2nd Ed., Issue Date: 2007-03-27, Revision Date: 2019-05-09
Additional Information:	See the UL Online Certifications Directory at https://iq.ulprospector.com for additional information

This Certificate of Compliance does not provide authorization to apply the UL Mark. Only the UL Follow-Up Services Procedure provides authorization to apply the UL Mark.

Only those products bearing the UL Mark should be considered as being UL Certified and covered under UL's Follow-Up Services.

Look for the UL Certification Mark on the product.

Bruce Mahrenholz, Director North American Certification Program

UL LLC

Any information and documentation involving UL Mark services are provided on behalf of UL LLC (UL) or any authorized licensee of UL. For questions, please contact a local UL Customer Service Representative at http://ul.com/aboutul/locations/

CERTIFICATE OF COMPLIANCE

Certificate Number UL-US-L158873-26X1A250-71509102-2
Report Reference E158873-20190517
Date 6-Sep-2021

This is to certify that representative samples of the product as specified on this certificate were tested according to the current UL requirements

Model	Category Description
QND-6012R	NETWORK CAMERA
QND-6012R1	NETWORK CAMERA
QND-6022R	NETWORK CAMERA
QND-6022R1	NETWORK CAMERA
QND-6032R	NETWORK CAMERA
QND-6032R1	NETWORK CAMERA
QND-6072R	NETWORK CAMERA
QND-6072R1	NETWORK CAMERA
QND-6073R	NETWORK CAMERA
QND-6082R	NETWORK CAMERA
QND-6082R1	NETWORK CAMERA
QND-6083R	NETWORK CAMERA

Bruce Mahrenholz, Director North American Certification Program

UL LLC

Any information and documentation involving UL Mark services are provided on behalf of UL LLC (UL) or any authorized licensee of UL. For questions, please contact a local UL Customer Service Representative at http://ul.com/aboutul/locations/

UL TEST REPORT AND PROCEDURE

Standard:	UL 60950-1, 2nd Edition, 2019-05-09 (Information Technology Equipment - Safety - Part 1: General Requirements) CAN/CSA C22.2 No. 60950-1-07, 2nd Edition, 2014-10 (Information Technology Equipment - Safety - Part 1: General Requirements)
Certification Type:	Listing
CCN:	NWGQ, NWGQ7 (Information Technology Equipment Including Electrical Business Equipment)
Complementary CCN:	N/A
Product:	NETWORK CAMERA
Model:	QND-6083R, QND-6082R, QND-6073R, QND-6072R, QND-6032R, QND-6022R, QND-6012R, QND-6012R1, QND-6022R1, QND-6032R1, QND-6072R1, QND-6082R1
Rating:	PoE(48 Vdc), 0.16A or 12 Vdc, 0.55A (for QND-6083R, QND-6082R, QND-6073R, QND-6072R, QND-6072R1, QND-6082R1) PoE(48 Vdc), 0.16A or 12 Vdc, 0.54A (for QND-6032R, QND-6022R, QND-6012R, QND-6012R1, QND-6022R1, QND-6032R1)
Applicant Name and Address:	HANWHA TECHWIN CO LTD 6, PANGYO-RO 319BEON-GIL, BUNDANG-GU SEONGNAM-SI KOREA, REPUBLIC OF

This is to certify that representative samples of the products covered by this Test Report have been investigated in accordance with the above referenced Standards. The products have been found to comply with the requirements covering the category and the products are judged to be eligible for Follow-Up Service under the indicated Test Procedure. The manufacturer is authorized to use the UL Mark on such products which comply with this Test Report and any other applicable requirements of UL LLC ('UL') in accordance with the Follow-Up Service Agreement. Only those products which properly bear the UL Mark are considered as being covered by UL's Follow-Up Service under the indicated Test Procedure.

The applicant is authorized to reproduce the referenced Test Report provided it is reproduced in its entirety.

UL authorizes the applicant to reproduce the latest pages of the referenced Test Report consisting of the first page of the Specific Technical Criteria through to the end of the Conditions of Acceptability.

Any information and documentation involving UL Mark services are provided on behalf of UL LLC (UL) or any authorized licensee of UL.

Prepared By: Lawrence Lee / Project Handler Reviewed By: SeulKi Park / Reviewer

Supporting Documentation

The following documents located at the beginning of this Procedure supplement the requirements of this Test Report:

A. Authorization - The Authorization page may include additional Factory Identification Code markings.

B. Generic Inspection Instructions -

i. Part AC details important information which may be applicable to products covered by this Procedure. Products described in this Test Report must comply with any applicable items listed unless otherwise stated in the body of this Test Report.

ii. Part AE details any requirements which may be applicable to all products covered by this Procedure. Products described in this Test Report must comply with any applicable items listed unless otherwise stated in the body of each Test Report.

iii. Part AF details the requirements for the UL Certification Mark which is not controlled by the technical standard used to investigate these products. Products are permitted to bear only the Certification Mark(s) corresponding to the countries for which it is certified, as indicated in each Test Report.

Product Description

A NETWORK CAMERA intended for indoor use.

Electronic components were mounted on PWB, housed in plastic and metal enclosure supplied by 12 Vdc or PoE. (Supplied by SELV, LPS)

Model Differences

- Basic model is QND-6083R.

- Model QND-6082R is identical to basic model QND-6083R except for without audio out.

- Model QND-6073R is identical to basic model QND-6083R except for with IRIS without Lens Zoom/focus, Lens switch, Len Automatic variable type.

- Model QND-6072R is identical to basic model QND-6083R except for with IRIS without Lens Zoom/focus, Lens switch, Len Automatic variable type, audio out.

- Model QND-6032R is identical to basic model QND-6083R except for PoE(48Vdc),0.16A or 12Vdc , 0.54A with IR LED 2ea, focallength 6.0mm, without Lens Zoom/focus, Lens switch, Len Automatic variable type.

- Model QND-6022R is identical to basic model QND-6083R except for PoE(48Vdc),0.16A or 12Vdc , 0.54A with IR LED 2ea, focallength 3.6mm, without Lens Zoom/focus, Lens switch, Len Automatic variable type.

- Model QND-6012R is identical to basic model QND-6083R except for PoE(48Vdc),0.16A or 12Vdc , 0.54A with IR LED 4ea, MIC, focallength 2.8mm, without Lens Zoom/focus, Lens switch, Len Automatic variable type.

- Model QND-6012R1, QND-6022R1, QND-6032R1, QND-6072R1, QND-6082R1 are identical to basic model QND-6083R except for model designation and without Audio function.

Test Item Particulars

Mass of equipment (kg)	0.48
Equipment mobility	Fixed
Connection to the mains	N/A
Operating condition	continuous
Access location	operator accessible
Over voltage category (OVC)	OVC I
Mains supply tolerance (%) or absolute mains supply values	No direct connection

Tested for IT power systems	No
IT testing, phase-phase voltage (V)	N/A
Class of equipment	Class III (supplied by SELV)
Considered current rating of protective device as part of the building installation (A)	N/A
Pollution degree (PD)	PD 2
IP protection class	IP X0
Altitude of operation (m)	less than 2000 meters
Altitude of test laboratory (m)	less than 2000 meters

Technical Considerations

- The product was submitted and evaluated for use at the maximum ambient temperature (Tma) permitted by the manufacturer's specification of : 55 °C
- The product was investigated to the following additional standards : IEC 62471
- The following are available from the Applicant upon request : Installation (Safety) Instructions / Manual

Additional Information

Original (4788960251)
- Maximum normal load: Continuous operation with IR LED on.

4789542632
- Change Transparent Dome Cover Enclosure (Plastic) type S-2000V+(f1) made by Mitsubishi Engineering Plastic Corp

4790055921
- Add model name; QND-6012R1, QND-6022R1, QND-6032R1, QND-6072R1, QND-6082R1.

Additional Standards

The product fulfills the requirements of: N/A

Markings and Instructions

Clause Title	Marking or Instruction Details
Power rating - Ratings	Ratings (voltage, frequency/dc, current)
Power rating - Company identification	Listee's or Recognized companys name, Trade Name, Trademark or File Number
Power rating - Model	Model Number
Manual -1	This product is intended to be supplied by a Listed Power Supply Unit marked "Class 2" or "LPS" and rated from 12 Vdc, 0.55A(12 Vdc, 0.54A) or PoE(48V), 0.16A.

Manual -2	The wired LAN hub providing power over the Ethernet (PoE) in accordance with IEEE 802-3af shall be a UL Listed device with the output evaluated as a Limited Power Source as defined in UL60950-1.
Manual -3	ITE is to be connected only to PoE networks without routing to the outside plant. Unit is intended for installation in a Network Environment 0 as defined in IEC TR 62102. As such, associated Ethernet wiring shall be limited to inside the building.
Special Instructions to UL Representative N/A	

BD1.0	**TABLE: Production-Line Testing Requirements**					
BD1.1	**Electric Strength Test Special Constructions – Refer to Generic Inspection Instructions, Part AC for further information.**					
Model	Component	Removable parts	Test probe location	Test V rms	Test V dc	Test Time, s
N/A	N/A	N/A	N/A	N/A	N/A	N/A
BD1.2	**Earthing Continuity Test Exemptions – This test is not required for the following models:**					
	All models					
BD1.3	**Electric Strength Test Exemptions – This test is not required for the following models:**					
	All models					
BD1.4	**Electric Strength Test Component Exemptions – The following solid-state components may be disconnected from the remainder of the circuitry during the performance of this test:**					
	All models					

BE1.0	**Sample and Test Specifics for Follow-Up Tests at UL**				
Model	Component	Material	Test	Sample (s)	Test Specifics
-	-	-	-	-	-

1.5.1	TABLE: List of critical components					Pass
Object / part No.	Manufacturer/ trademark	Type / model	Technical data	Product Category CCN(s)	Mark(s) of conformity	Supplement ID
Transparent Dome Cover Window (Plastic)	MitsubishiEngineering Plastic Corp	S-2000V+(f1)	Min. 1.5 mm thickness, rated Min. V-2, 115 deg. C.	QMFZ2	USR (E41179)	
External Enclosure (Plastic)	LOTTE CHEMICAL CORPORATION	NH-1035(+)	Min. 1.5 mm thick, rated V-0, 80 deg.C	QMFZ2/8	UL/cUL (E115797)	
External Enclosure (Metal)	Interchangeable	Interchangeable	Aluminium, Min. 2.5 mm thickness. See enclosure for dimension	-	-	
Transformer(T301)	SHENZHEN GROUP-TEK ELECTRONICS TECHNOLOGY CO LTD	PDT2433ASR	130 deg.C, see enclosure for more detail.	-	-	
Fuse (F401)	SEMITEL ELECTRONICS CO LTD	S6125S	125 V, 1.5 A	JDYX2/8	UL/cUL(E338954)	
IR LED (4EA, LD1 to, LD4For modelsQND-6083R, QND-6082R, QND-6073R, QND-6072R, QND-6012R)	LITEON OPTOELECTRONICS	LTE-R38386A-S-SS	IE : 500mW/sr, Vf : Max. 2.5V	-	-	
IR LED (2EA, LD1, LD2 For models QND-6032R, QND-6022R)	LITEON OPTOELECTRONICS	LTE-R38386A-S-SS	IE : 500mW/sr, Vf : Max. 2.5V	-	-	
Opto-coupler(2EA, LS1,LS301)	LITE-ON TECHNOLOGY CORP	LTV-356T(%)(c)	Isolation Voltage: 3750VrmsMax. Operation Temperature: 110 deg.C	FPQU2/8	UL/cUL(E113898)	

Thermal Pad	KOMOTECH CO LTD	KGP-1	Min. 0.2 mm thickness, rated V-0, 150 deg.C	QMFZ2/8	UL/cUL(E245303)	
Cable	Interchangeable	Interchangeable	FEP, PTFE, PVC, TFE, neoprene, polyimide or marked VW-1; Min. 30 V, 80 deg.C	AVLV2	UL	
Internal Wiring (Secondary)	Interchangeable	Interchangeable	FEP, PTFE, PVC, TFE, neoprene, polyimide or marked VW-1; Min. 30 V, 80 deg.C	AVLV2	UL	
Lithium Battery (BAT1101)	SEIKO INSTRUMENTS INC MICRO-ENERGY DIV	ML414H	Lithium(Coin), Rechargeable, Max charging voltage:3.4Vdc, Maximum charging current:300mA	BBCV2	UL(MH15628)	
FPWB	ACCU TECH	20861	Min. VW-160 V, 105 deg. C.	AVLV2	UL (E479379)	
PWB	Interchangeable	Interchangeable	Min. V-0, 130 deg.C	ZPMV2	UL	
Label	Interchangeable	Interchangeable	Min.55 deg. C if max. surface temperature not specified.	PGDQ2 or PGJI2	UL	

Enclosures

Type	Supplement Id	Description
Photographs	03-01	Overall -1
Photographs	03-02	Overall -2
Photographs	03-03	Internal -1
Photographs	03-04	Internal -2
Photographs	03-05	LED board (Top)
Photographs	03-06	LED board (Bottom)
Manuals	06-01	Manual - QND-6073R / 6083R
Manuals	06-02	Manual - QND-6082R / 6072R / 6032R / 6022R / 6012R
Miscellaneous	07-01	Enclosure dimension
Miscellaneous	07-02	Transformer (T301) spec by SHENZHEN GROUP TEK ELECTRONICS TECHNOLOGY CO LTD
Miscellaneous	07-04	Label (representative)
Miscellaneous	07-05	Dual language safety labeling CRD
Miscellaneous	07-06	LED report (4ea) - QND-6083R/6082R/6073R/6072R/6012R
Miscellaneous	07-08	LED report (2ea) - QND-6032R/6022R

WISENET

NETWORK CAMERA

User Manual

QND-6073R/QND-6083R
QNO-6073R/QNO-6083R
QNV-6073R/QNV-6083R

CE

Network Camera

User Manual

Copyright

©2019 Hanwha Techwin Co., Ltd. All rights reserved.

Trademark

Each of trademarks herein is registered. The name of this product and other trademarks mentioned in this manual are the registered trademark of their respective company.

Restriction

Copyright of this document is reserved. Under no circumstances, this document shall be reproduced, distributed or changed, partially or wholly, without formal authorization.

Disclaimer

Hanwha Techwin makes the best to verify the integrity and correctness of the contents in this document, but no formal guarantee shall be provided. Use of this document and the subsequent results shall be entirely on the user's own responsibility. Hanwha Techwin reserves the right to change the contents of this document without prior notice.

✧ Design and specifications are subject to change without prior notice.

✧ The initial administrator ID is "admin" and the password should be set when logging in for the first time.
Please change your password every three months to safely protect personal information and to prevent the damage of the information theft.
Please, take note that it's a user's responsibility for the security and any other problems caused by mismanaging a password.

IMPORTANT SAFETY INSTRUCTIONS

1. Read these instructions.
2. Keep these instructions.
3. Heed all warnings.
4. Follow all instructions.
5. Do not use this apparatus near water.
6. Clean the contaminated area on the product surface with a soft, dry cloth or a damp cloth.
   (Do not use a detergent or cosmetic products that contain alcohol, solvents or surfactants or oil constituents as they may deform or cause damage to the product.)
7. Do not block any ventilation openings, Install in accordance with the manufacturer's instructions.
8. Do not install near any heat sources such as radiators, heat registers, stoves, or other apparatus (including amplifiers) that produce heat.
9. Do not defeat the safety purpose of the polarized or grounding-type plug. A polarized plug has two blades with one wider than the other. A grounding type plug has two blades and a third grounding prong. The wide blade or the third prong are provided for your safety. If the provided plug does not fit into your outlet, consult an electrician for replacement of the obsolete outlet.
10. Protect the power cord from being walked on or pinched particularly at plugs, convenience receptacles, and the point where they exit from the apparatus.
11. Only use attachments/ accessories specified by the manufacturer.
12. Use only with the cart, stand, tripod, bracket, or table specified by the manufacturer, or sold with the apparatus. When a cart is used, use caution when moving the cart/ apparatus combination to avoid injury from tip-over.

13. Unplug this apparatus during lighting storms or when unused for long periods of time.
14. Refer all servicing to qualified service personnel. Servicing is required when the apparatus has been damaged in any way, such as power-supply cord or plug is damaged, liquid has been spilled or objects have fallen into the apparatus, the apparatus has been exposed to rain or moisture, does not operate normally, or has been dropped.
15. This product is intended to be a Listed Power Supply Unit marked "Class2" or "LPS" and rated from 12Vdc, 0.55A or PoE(48V), 0.16A. (QND-6073R/6083R, QNV-6073R/6083R)
16. This product is intended to be a Listed Power Supply Unit marked "Class2" or "LPS" and rated from 12Vdc, 0.55A or PoE(48V), 0.16A. (QNO-6073R/6083R)
17. This product is intended to be supplied by isolation power.
18. If you use excessive force when installing the product, the camera may be damaged and malfunction.
    If you forcibly install the product using non-compliant tools, the product may be damaged.
19. Do not install the product in a place where chemical substances or oil mist exists or may be generated. As edible oils such as soybean oil may damage or warp the product, do not install the product in the kitchen or near the kitchen table.
    This may cause damage to the product.
20. When installing the product, be careful not to allow the surface of the product to be stained with chemical substance.
    Some chemical solvents such as cleaner or adhesives may cause serious damage to the product's surface.
21. If you install/disassemble the product in a manner that has not been recommended, the production functions/ performance may not be guaranteed.
    Install the product by referring to "Installation & connection" in the user manual.
22. Installing or using the product in water can cause serious damage to the product.
23. Although a rapid change in temperature could cause frost inside the dome, there will be no problem with the video.

WARNING

TO REDUCE THE RISK OF FIRE OR ELECTRIC SHOCK, DO NOT EXPOSE THIS PRODUCT TO RAIN OR MOISTURE. DO NOT INSERT ANY METALLIC OBJECT THROUGH THE VENTILATION GRILLS OR OTHER OPENNINGS ON THE EQUIPMENT.

Apparatus shall not be exposed to dripping or splashing and that no objects filled with liquids, such as vases, shall be placed on the apparatus.

To prevent injury, this apparatus must be securely attached to the Wall/ceiling in accordance with the installation instructions.

CAUTION

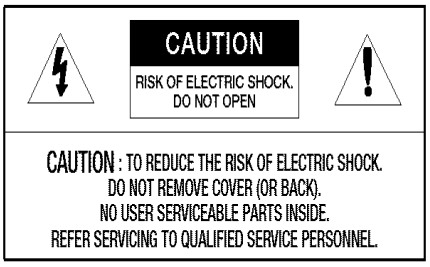

EXPLANATION OF GRAPHICAL SYMBOLS

The lightning flash with arrowhead symbol, within an equilateral triangle, is intended to alert the user to the presence of "dangerous voltage" within the product's enclosure that may be of sufficient magnitude to constitute a risk of electric shock to persons.

The exclamation point within an equilateral triangle is intended to alert the user to the presence of important operating and maintenance (servicing) instructions in the literature accompanying the product.

overview

Class I construction

An apparatus with CLASS I construction shall be connected to a MAINS socket outlet with a protective earthing connection.

Battery

Batteries(battery pack or batteries installed) shall not be exposed to excessive heat such as sunshine, fire or the like.

The battery cannot be replaced.

Disconnection Device

Disconnect the main plug from the apparatus, if it's defected. And please call a repair man in your location.

When used outside of the U.S., it may be used HAR code with fittings of an approved agency is employed.

CAUTION

RISK OF EXPLOSION IF BATTERY IS REPLACED BY AN INCORRECT TYPE.
DISPOSE OF USED BATTERIES ACCORDING TO THE INSTRUCTIONS.

ATTENTION

IL Y A RISQUE D'EXPLOSION SI LA BATTERIE EST REMPLACÉE PAR UNE BATTERIE DE TYPE INCORRECT.
METTRE AU REBUT LES BATTERIES USAGÉES CONFORMÉMENT AUX INSTRUCTIONS.

These servicing instructions are for use by qualified service personnel only.
To reduce the risk of electric shock do not perform any servicing other than that contained in the operating instructions unless you are qualified to do so.

Please use the input power with just one camera and other devices must not be connected.

The ITE is to be connected only to PoE networks without routing to the outside plant.

The wired LAN hub providing power over the Ethernet (PoE) in accordance with IEEE 802-3af shall be a UL Listed device with the output evaluated as a Limited Power Source as defined in UL60950-1.

Unit is intended for installation in a Network Environment 0 as defined in IEC TR 62102. As such, associated Ethernet wiring shall be limited to inside the building.

Please read the following recommended safety precautions carefully.

- Do not place this apparatus on an uneven surface.
- Do not install on a surface where it is exposed to direct sunlight, near heating equipment or heavy cold area.
- Do not place this apparatus near conductive material.
- Do not attempt to service this apparatus yourself.
- Do not place a glass of water on the product.
- Do not install near any magnetic sources.
- Do not block any ventilation openings.
- Do not place heavy items on the product.
- Please wear protective gloves when installing/removing the camera.
  The high temperature of the product surface may cause a burn.

User's Manual is a guidance book for how to use the products.

The meaning of the symbols are shown below.

- Reference : In case of providing information for helping of product's usages
- Notice : If there's any possibility to occur any damages for the goods and human caused by not following the instruction

※ Please read this manual for the safety before using of goods and keep it in the safe place.

WARNING

To Prevent damage which may caused by IR LED, don't stare at operating lamp.

For below models only.

QND-6073R/QND-6083R

QNO-6073R/QNO-6083R

QNV-6073R/QNV-6083R

Risk Group 1
WARNING IR emitted from this product. **Do not stare at operating lamp.**
Product tested against IEC 62471

CONTENTS

OVERVIEW 3

3 Important Safety Instructions
6 Product Features
6 Recommended PC Specifications
6 Recommended Micro SD/SDHC/SDXC Memory Card Specifications
6 NAS recommended specs
7 What's Included
8 At a Glance (QND-6073R/QND-6083R)
10 At a Glance (QNO-6073R/QNO-6083R)
12 At a Glance (QNV-6073R/QNV-6083R)

INSTALLATION & CONNECTION 14

14 Installation (QND-6073R/QND-6083R)
15 Installation (QNO-6073R/QNO-6083R)
16 Installation (QNV-6073R/QNV-6083R)
19 Inserting/Removing a Micro SD Memory Card
21 Powering and networking

NETWORK CONNECTION AND SETUP 25

25 Connecting the Camera Directly to Local Area Networking
25 Connecting the Camera Directly to a DHCP Based DSL/Cable Modem
26 Buttons used in IP Installer
26 Static IP Setup
28 Dynamic IP Setup
28 Port Range Forward (Port Mapping) Setup
29 Connecting to the Camera from a Shared Local PC
29 Connecting to the Camera from a Remote PC via the Internet

WEB VIEWER 30

30 Connecting to the Camera
31 Password setting
31 Login
31 Camera Web Viewer Setup

APPENDIX 32

32 Specification
34 Product Overview
36 Troubleshooting
37 Open Source Announcement

overview

PRODUCT FEATURES

- **Dustproof/Waterproof (IP66) (QNO-6073R/QNO-6083R/QNV-6073R/QNV-6083R)**
  The dustproof and waterproof design makes you feel at ease when installing the product outdoors or exposing it to rain.
- **IR mode**
  If the IR indicator turns on, the product switches to the IR mode for preventing an object from being too bright, which helps you identify the object in near distance.
- **Supports 2 megapixel resolution videos**
- **Multi-Streaming**
  This network camera can display videos in different resolutions and qualities simultaneously using different CODECs.
- **Web Browser-based Monitoring**
  Using the Internet web browser to display the image in a local network environment.
- **Alarm**
  When an event occurs, video is either sent to the email address registered by the user, sent to the FTP server, saved in a Micro SD card or NAS, or a signal is sent to the alert output terminal.
- **Tampering Detection**
  Detects tempering attempts on video monitoring.
- **Defocus detection function**
  Detects the defocus phenomenon of the camera lens.
- **Motion Detection**
  Detects motion from the camera's video input.
- **Auto Detection of Disconnected Network**
  Detects network disconnection before triggering an event.
- **ONVIF Compliance**
  This product supports ONVIF Profile S&G.
  For more information, refer to www.onvif.org.

Driving network video through global standardization

RECOMMENDED PC SPECIFICATIONS

- CPU : Intel(R) Core(TM) i7 3.4 GHz or higher
- RAM : 8G or higher
- Supported OS : Windows 7, 8.1, 10, Mac OS X 10.12, 10.13, 10.14
- Recommended browser : Google Chrome
- Supported browsers : MS Explore11, MS Edge, Mozilla Firefox(Window 64bit only), Apple Safari(Mac OS X only)
- VGA : PCIe 256MB GDDR3 video graphics card or higher

※ Please see the appendix for detailed information on verified OS and browsers.

RECOMMENDED MICRO SD/SDHC/SDXC MEMORY CARD SPECIFICATIONS

- Recommended capacity : 16GB ~ 128GB(MLC type)
- Recommended Manufacturers : SanDisk, Transcend
- Product Type : High endurance
- The compatibility varies depending on the card manufacturers and types.

NAS RECOMMENDED SPECS

- Recommended capacity : 200GB or higher is recommended.
- Simultaneous access : One unit of NAS can accept a maximum of sixteen camera accesses.
- For this camera, you are recommended to use a NAS with the following manufacturer's specs.

Recommended products	Available sizes
QNAP NAS	A maximum of 16 cameras can access simultaneously.
Synology NAS	A maximum of 16 cameras can access simultaneously.

- When you use Netgear's NAS equipment, do not allocate the capacity for use.
- If you use NAS equipment for purposes other than video saving, the number of accessible cameras may be reduced.

WHAT'S INCLUDED

Please check if your camera and accessories are all included in the product package.
(As for each sales country, accessories are not the same.)

Appearance	Item Name	Quantity	Description	Model Name
	Camera	1		QND-6073R/ QND-6083R
		1		QNO-6073R/ QNO-6083R
		1		QNV-6073R/ QNV-6083R
	Instruction book, Installer S/W CD	1		QND-6073R/ QND-6083R/ QNO-6073R/ QNO-6083R/ QNV-6073R/ QNV-6083R
	Quick Guide	1		QND-6073R/ QND-6083R/ QNO-6073R/ QNO-6083R/ QNV-6073R/ QNV-6083R
	Warranty card (Optional)	1		QND-6073R/ QND-6083R/ QNO-6073R/ QNO-6083R/ QNV-6073R/ QNV-6083R
	Template	1	Product installation guide	QND-6073R/ QND-6083R/ QNO-6073R/ QNO-6083R/ QNV-6073R/ QNV-6083R

Appearance	Item Name	Quantity	Description	Model Name
	Power Terminal Block	1	Plugged in the power plug	QND-6073R/ QND-6083R/ QNV-6073R/ QNV-6083R
	L Wrench	1	Used to control the direction of the camera	QNO-6073R/ QNO-6083R
	L Wrench (star-shaped)	1	Used to remove and replace the dome cover	QNV-6073R/ QNV-6083R
	Card-type moisture absorbent	3	Attached when installed.	QNO-6073R/ QNO-6083R
		1		QNV-6073R/ QNV-6083R
	Audio/alarm cable	1	Used to connect with the audio and alarm port	QND-6073R/ QND-6083R
	Audio/alarm cable	1	Used to connect with the audio and alarm port	QNV-6073R/ QNV-6083R
	RJ45 waterproof accessory	1	Used to install in humid places	QNO-6073R/ QNO-6083R
	Sunshield	1	It protects the camera from the direct sunlight.	QNO-6073R/ QNO-6083R
	Sunshield Hold	1	It fixes the sunshield with the camera.	QNO-6073R/ QNO-6083R

overview

Appearance	Item Name	Quantity	Description	Model Name
	Power Cable	1	Used to plug into the power port	QNV-6073R/ QNV-6083R
	Cap Installer	1	Used when connecting RJ45 cable	QNV-6073R/ QNV-6083R
	Cable for the testing monitor	1	Used to test the camera connection to a portable display device	QND-6073R/ QND-6083R/ QNO-6073R/ QNO-6083R/ QNV-6073R/ QNV-6083R
	Cable bush	1	Used to connect the LAN cable	QNV-6073R/ QNV-6083R

Optional Accessories for Installation

For your easier installation, you can purchase appropriate optional accessories available.

Model name	Hanging Mount	Back Box	Pole Mount	All
QNV-6073R/6083R	SBP-301HMW2	SBV-136BW		SBP-300LMW (Parapet Mount)
QND-6073R/6083R	SBP-122HMW			SBP-300CMW (Ceiling Mount)
QNO-6073R/6083R		SBO-100B1	SBP-302PM	SBP-300WMW1 (Wall Mount)
				SBP-300NBW (Instalation Box)
				SBP-300PMW (Pole Mount)
				SBP-300KMW (Corner Mount)

AT A GLANCE (QND-6073R/QND-6083R)

Appearance

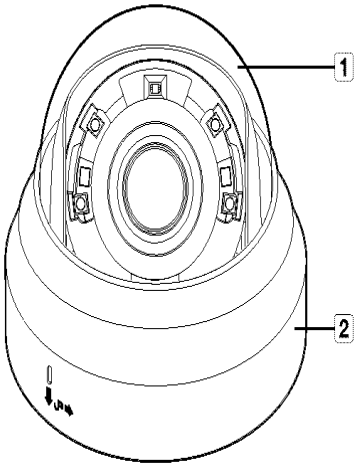

Item	Description
1 Dome cover	Case cover used to protect the lens and the main unit.
2 Camera Case	Housing part that covers the camera body.

Components

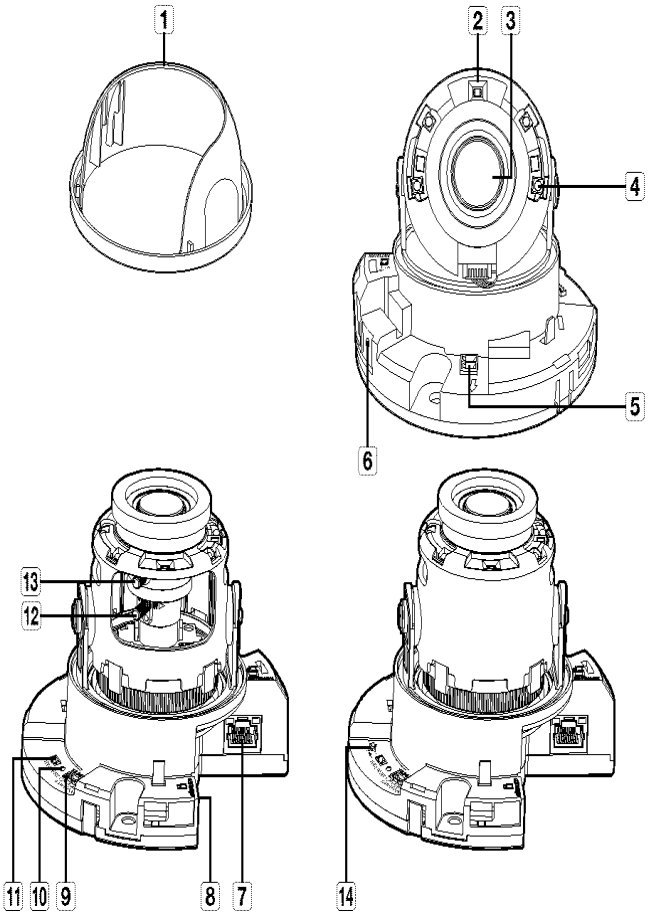

<QND-6073R> <QND-6083R>

Item	Description
1 Inside cover	Protective cover for the main body.
2 Illumination Sensor	Detects incoming light to control the IR LED.
3 Lens	Lens for the camera.

Item	Description	
4 IR LED	These infrared LED's are controlled by the illumination sensor.	
5 Power Port	Port for power terminal block.	
6 Microphone hole	Microphone is embedded.	
7 Network Port	Used to connect the PoE or Ethernet cable for network connection.	
8 Micro SD Memory Card Compartment	Compartment for the Micro SD memory card.	
9 Alarm I/O port / Audio Out port	ARM-IN	Used to connect the alarm input sensor or external day/night sensor.
	ARM-OUT	Used to connect the alarm output signal.
	GND	These are common ports to connect alarm input/output signals.
	AUDIO OUT	Used to connect to speakers.
10 Reset Button	The button restores all camera settings to the factory default. Press and hold for about 5 seconds to reboot the system. If you reset the camera, the network settings will be adjusted so that DHCP can be enabled. If there is no DHCP server in the network, you must run the IP Installer program to change the basic network settings such as IP address, Subnet mask, Gateway, etc., before you can connect to the network.	
11 Test Monitor Out	Output port for test monitoring the video output. Use the test monitor cable to connect to a mobile display and check the test video.	
12 Zoom control lever (QND-6073R)	T	Zoom in (Tele)
	W	Zoom out (Wide)
	Release the lever and move it to left or right to zoom the lens in or out. Turn the lever clockwise to fix the adjusted position to prevent it from being moved.	
13 Focus control lever (QND-6073R)	N	Focusing on a near object (Near)
	F	Focusing on a far object (Far)
	Release the lever and move it to left or right to adjust the lens focus. Turn the lever clockwise to fix the adjusted position to prevent it from being moved.	
14 Zoom/Focus Control Button (QND-6083R)	T	Zoom in (Tele)
	W	Zoom out (Wide)
	N	Focusing on a near object (Near)
	F	Focusing on a far object (Far)
	Focus Control	Press this button for automatic focus control.

overview

AT A GLANCE (QNO-6073R/QNO-6083R)

Appearance

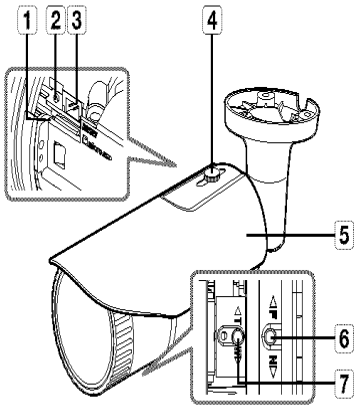

<QNO-6073R>

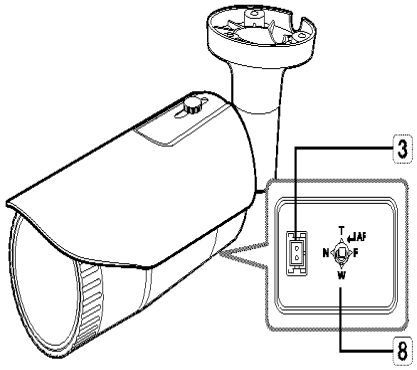

<QNO-6083R>

Item	Description	
1 Micro SD card slot	(Internal space of the product) This is a slot in which you can insert a Micro SD card.	
2 Reset button	The button restores all camera settings to the factory default. Press and hold for about 5 seconds to reboot the system. If you reset the camera, the network settings will be adjusted so that DHCP can be enabled. If there is no DHCP server in the network, you must run the IP Installer program to change the basic network settings such as IP address, Subnet mask, Gateway, etc., before you can connect to the network.	
3 Test Monitor Out	Output port for test monitoring the video output. Use the test monitor cable to connect to a mobile display and check the test video.	
4 Sunshield Hold	It fixes the sunshield with the camera.	
5 Sunshield	It protects the camera from the direct sunlight.	
6 Focus control lever (QNO-6073R)	N	Focusing on a near object (Near)
	F	Focusing on a far object (Far)
	Release the lever and move it to left or right to adjust the lens focus. Turn the lever clockwise to fix the adjusted position to prevent it from being moved.	
7 Zoom control lever (QNO-6073R)	T	Zoom in (Tele)
	W	Zoom out (Wide)
	Release the lever and move it to left or right to zoom the lens in or out. Turn the lever clockwise to fix the adjusted position to prevent it from being moved.	
8 Zoom/Focus Control Button (QNO-6083R)	T	Zoom in (Tele)
	W	Zoom out (Wide)
	N	Focusing on a near object (Near)
	F	Focusing on a far object (Far)
	Focus Control	Press this button for automatic focus control.

Components

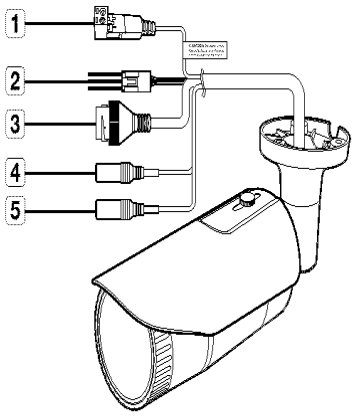

Item	Description	
1 Power Port	Used to plug the power cable.	
2 Alarm I/O Port	ARM-OUT	Used to connect the alarm output signal.
	GND	These are common ports to connect alarm input/output signals.
	ARM-IN	Used to connect the alarm input sensor or external day/night sensor.
3 Network Port	Used to connect the PoE or Ethernet cable for network connection.	
4 Audio In Jack	Used to connect to a microphone.	
5 Audio Out Jack	Used to connect to speakers.	

overview

AT A GLANCE (QNV-6073R/QNV-6083R)

Appearance

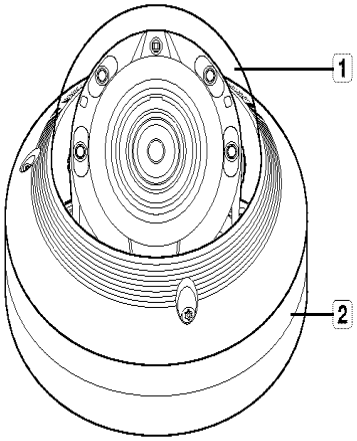

Item	Description
1 Dome cover	Case cover used to protect the lens and the main unit.
2 Camera Case	Housing part that covers the camera body.

Components

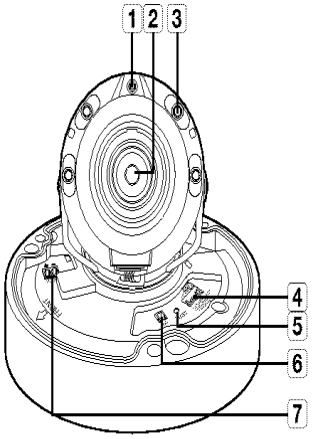

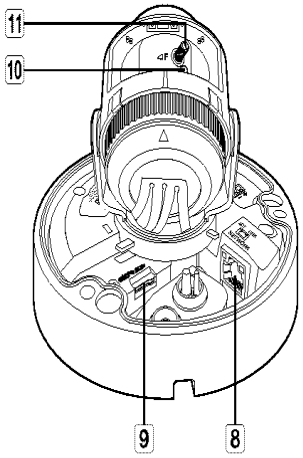

<QNV-6073R>

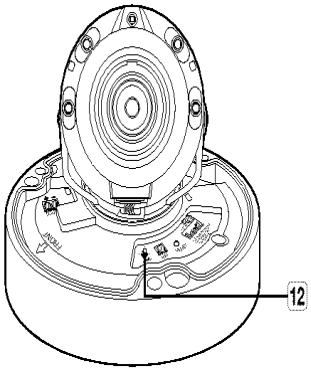

<QNV-6083R>

Item	Description	
1 Illumination Sensor	Detects incoming light to control the IR LED.	
2 Lens	Lens for the camera.	
3 IR LED	These infrared LED's are controlled by the illumination sensor.	
4 Alarm I/O port / Audio I/O port	ARM-IN	Used to connect the alarm input sensor or external day/night sensor.
	ARM-OUT	Used to connect the alarm output signal.
	GND	These are common ports to connect alarm input/output signals.
	AUDIO IN	Used to connect to a microphone.
	AUDIO OUT	Used to connect to speakers.
5 Reset button	The button restores all camera settings to the factory default. Press and hold for about 5 seconds to reboot the system. If you reset the camera, the network settings will be adjusted so that DHCP can be enabled. If there is no DHCP server in the network, you must run the IP Installer program to change the basic network settings such as IP address, Subnet mask, Gateway, etc., before you can connect to the network.	
6 Test Monitor Out	Output port for test monitoring the video output. Use the test monitor cable to connect to a mobile display and check the test video.	
7 Power Port	Port for power terminal block.	
8 Network Port	Used to connect the PoE or Ethernet cable for network connection.	
9 Micro SD Memory Card Compartment	Compartment for the Micro SD memory card.	
10 Zoom control lever (QNV-6073R)	T	Zoom in (Tele)
	W	Zoom out (Wide)
	Release the lever and move it to left or right to zoom the lens in or out. Turn the lever clockwise to fix the adjusted position to prevent it from being moved.	

Item	Description	
11 Focus control lever (QNV-6073R)	N	Focusing on a near object (Near)
	F	Focusing on a far object (Far)
	Release the lever and move it to left or right to adjust the lens focus. Turn the lever clockwise to fix the adjusted position to prevent it from being moved.	
12 Zoom/Focus Control Button (QNV-6083R)	T	Zoom in (Tele)
	W	Zoom out (Wide)
	N	Focusing on a near object (Near)
	F	Focusing on a far object (Far)
	Focus Control	Press this button for automatic focus control.

installation & connection

INSTALLATION (QND-6073R/QND-6083R)

Precautions before installation

Ensure you read out the following instructions before installing the camera:

- It must be installed on the area (ceiling or wall) that can withstand 5 times the weight of the camera including the installation bracket.
- Stuck-in or peeled-off cables can cause damage to the product or a fire.
- For safety purposes, keep anyone else away from the installation site.
  And put aside personal belongings from the site, just in case.
- For the manual variable focal lens camera, features such as focus and zoom should be adjusted before installation.
  When adjusting these, be sure to prevent foreign substances from becoming attached.

Disassembling

1. Use one hand to hold the camera's bottom part and turn the cover counterclockwise with another hand to separate it.

※ Do not touch the transparent part of the dome cover once the protective film is removed.

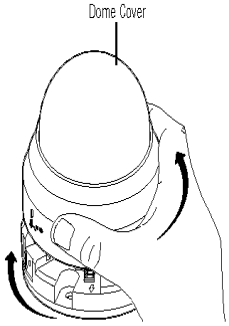

2. Lift up the inner cover to separate it.

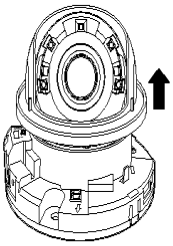

Installation

1. Consider the direction to be monitored, attach the template, and drill holes by following the template.

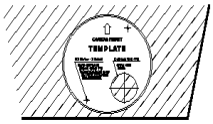

2. Using 2 tapping screws, fix the camera at 2 holes drilled with a template.
   ※ Set the < ⇧ > mark imprinted on the camera to face the direction of camera monitoring.
3. Connect the camera internal terminal with the corresponding cable.
4. Adjust the lens in a desired direction by referring to the "**Adjusting the monitoring direction for the camera**" section. (page 19)

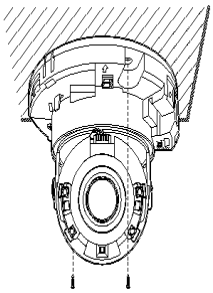

※ For the manual variable focal lens camera, features such as focus and zoom should be adjusted before installation.
When adjusting these, be sure to prevent foreign substances from becoming attached.

5. Please connect the inner cover to the main body.
6. While grabbing the bottom side of the camera with your hand, please grab and push its cover with the other hand to align the two arrow signs, as shown in the figure.

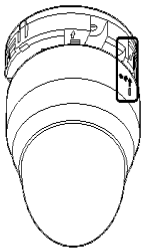

※ To assemble the dome cover, make the arrows match each other and press the cover firmly.
If the dome cover is rotated during assembly or is assembled incorrectly, diffused reflection may occur or the lens section may rotate, which will cause the shooting range to be changed.

※ Make sure that the dome cover is correctly connected to the bottom part as shown in the figure.
If the snap-fit is not connected correctly, the dome cover may fall, which may cause injury.

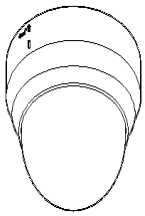

INSTALLATION (QNO-6073R/QNO-6083R)

※ This camera is waterproof and in compliance with the IP66 spec, but the jack connected to the external cable is not. You are recommended to install this product below the edge of eaves to prevent the cable from being externally exposed.

Precautions before installation

Ensure you read out the following instructions before installing the camera:

- It must be installed on the area (ceiling or wall) that can withstand 5 times the weight of the camera including the installation bracket.
- Stuck-in or peeled-off cables can cause damage to the product or a fire.
- For safety purposes, keep anyone else away from the installation site.
  And put aside personal belongings from the site, just in case.
- For the manual variable focal lens camera, features such as focus and zoom should be adjusted before installation.
  When adjusting these, be sure to prevent foreign substances from becoming attached.

Installation

1. Consider the direction to be monitored, attach the template, and drill holes by following the template.

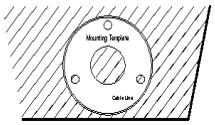

2. Insert and fasten 3 tapping screws into 3 holes to secure the camera.
3. Connect the appropriate cables with camera terminals.

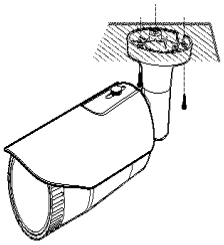

4. Adjust the camera direction using the L wrench provided.

※ When you adjust the camera position using a bracket, please loosen the bracket screw, adjust the camera, and tighten it. If you attempt to adjust it forcibly while the screw is tight, it may result in a scratch or other problems.

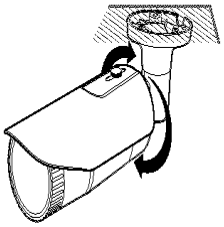

How to connect the RJ45 waterproof cable to a LAN cable

1. Insert it through the arrow direction.

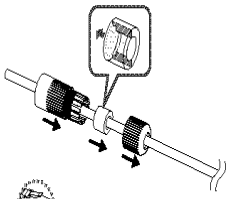

2. Connect the LAN connector (male) to the cable.

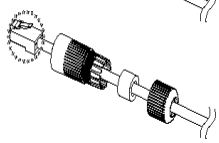

3. Connect the RJ45 modular jack (female) to the RJ45 connector (male).

※ Please, keep each of the parts separated.

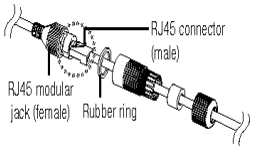

4. Assemble by rotating the RJ45 modular jack (female) and the RJ45 protection cover clockwise (Follow the arrow).

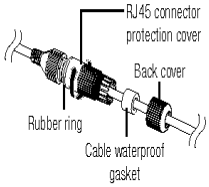

5. Assemble by rotating RJ45 protection cover and back cover clockwise (Follow the arrow).
   When the back cover is assembled, the cable waterproof gasket is tightly attached to the cable to make it waterproof.

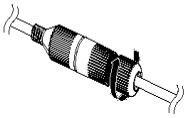

※ You must fully assemble it to rotate the back cover up to the end of the screw thread of the RJ45 connector.

installation & connection

Outdoor installation

When you install it outside of the building, please waterproof it with waterproof butyl rubber tape (can be purchased in stores) so that water does not leak from the gap of the cable connected to the outside.

1. Connect the power, I/O, AUDIO, and LAN cables.
2. Wrap the black cable jacket (Area A) and the cable connection area with waterproof (butyl rubber) tape so that more than half of the butyl rubber tape is overlapped.

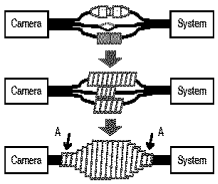

※ If the cable jacket is not waterproofed properly, then it can directly cause leakage. Make sure to protect the cable with a dense layer of taping.

※ Waterproof butyl tape is made of butyl rubber that can be stretched to twice its normal length.

To adjust the zoom factor or focus (QNO-6073R)

1. Loosen the front cover as shown.
2. Loosen the zoom/focus lever slightly.
3. Position the zoom/focus lever to WIDE (NEAR) or TELE (FAR) as appropriate.
4. Then, tighten the zoom/focus lever to fix the adjusted position.
5. Turn the front cover to tighten it.

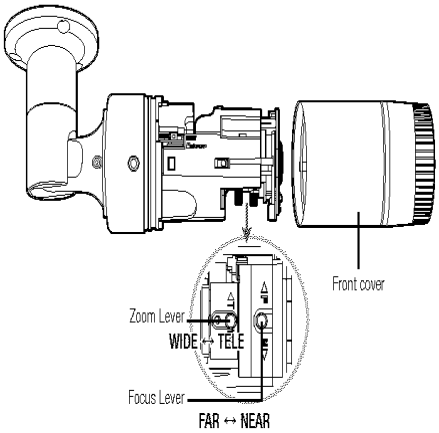

※ To ensure seamless waterproofing, tighten up the front cover by turning it to the end.
When combining the front cover, please combine the main body and the front cover so that the LOCK indicator is interlocked.

※ Use the lever to adjust the zoom factor or focus, and turn the lever clockwise to fix it.

※ Before you can adjust the zoom factor/focus of the lens, loosen and remove the front cover.

INSTALLATION (QNV-6073R/QNV-6083R)

※ This camera is waterproof and in compliance with the IP66 spec, but the jack connected to the external cable is not. You are recommended to install this product below the edge of eaves to prevent the cable from being externally exposed.

Precautions before installation

Ensure you read out the following instructions before installing the camera:

- It must be installed on the area (ceiling or wall) that can withstand 5 times the weight of the camera including the installation bracket.
- Stuck-in or peeled-off cables can cause damage to the product or a fire.
- For safety purposes, keep anyone else away from the installation site.
  And put aside personal belongings from the site, just in case.
- For the manual variable focal lens camera, features such as focus and zoom should be adjusted before installation.
  When adjusting these, be sure to prevent foreign substances from becoming attached.

Disassembling

1. Using the L wrench provided, turn the 3 fastening bolts on the dome cover counter clockwise to remove the cover.

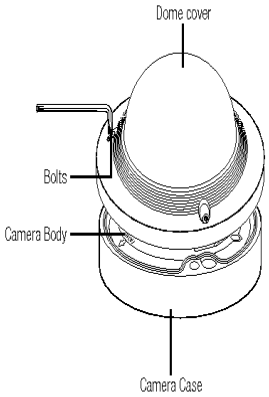

Installation

1. Using the template provided as an accessory, drill holes for installation screws (at least 55mm deep with a diameter of 6mm).
2. Align the installation holes of the camera, and then insert and fasten tapping screws (M4.5 x L50).
3. Connect and arrange the necessary cables lest that they should be damaged or twisted while installing the camera.
4. Adjust the lens in a desired direction by referring to the "**Adjusting the monitoring direction for the camera**" section. (page 19)
5. Close the dome cover.
   - Securely fasten the fastening bolt using an L wrench to prevent water from leaking.

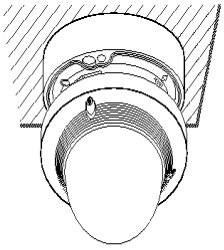

Connecting the LAN cable

1. Remove the dome cover and the case.
2. Pull out the Cable bush on the bottom as shown in the figure.

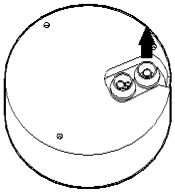

- Use an appropriate cable bush for the LAN cable to be connected.
  - Basic camera : Use the cable with a diameter of Ø5~6.5.

3. Pull off the extruded part of the 1-hole bush provided.
4. Use the Cap installer to pass through the LAN cable.

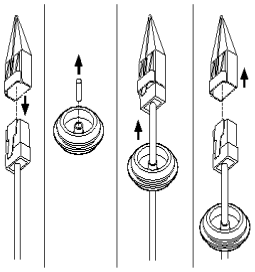

5. Route the LAN cable through the hole created after removing the cable bush in Step 2, and then connect it to the ethernet terminal.
6. Insert the bush of the LAN cable into the hole.

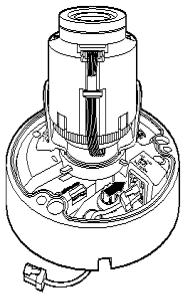

Connecting the audio/alarm cable and power cable

1. Remove the dome cover and the case.
2. Pull out the Cable bush on the bottom as shown in the figure.

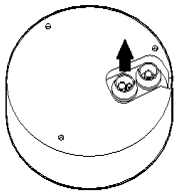

3. Pull off the small extruded part on the bush of the alarm/audio cable, and route the power cable through the bush.

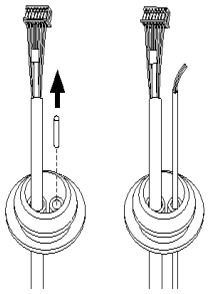

4. Route the alarm/audio cable through the hole left after removing the cable bush in Step 2. Connect each to the alarm/audio terminal and power terminal block of the PCB, respectively.
5. When installing the camera, arrange the cables by hanging them up on the fixing hook to prevent the cables from being damaged or caught.
6. Mount the bush of the provided audio & alarm cables to the camera case.
7. Adjust the lens in a desired direction by referring to the "**Adjusting the monitoring direction for the camera**" section. (page 19)
8. Attach the dome cover.

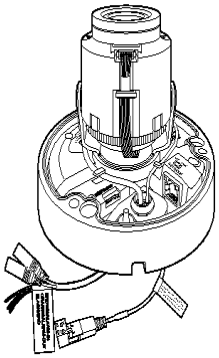

installation & connection

Attaching to the unbundled adapter

Choose and purchase a necessary one of the following options (unbundled) that is suitable to the installation site or for your convenience.

1. Remove the dome cover from the case by referring to the "**Disassembling**" section. (page 14)
2. Use the machine screw to fix the camera case to the unbundled adapter.
3. Connect and arrange the necessary cables lest that they should be damaged or twisted while installing the camera.
4. Install the camera body in the reverse order of "**Disassembling**".
5. Adjust the lens in a desired direction by referring to the "**Adjusting the monitoring direction for the camera**" section. (page 19)
6. Close the dome cover.
   - Securely fasten the fastening bolt using an L wrench to prevent water from leaking.

Outdoor installation

When you install it outside of the building, please waterproof it with waterproof butyl rubber tape (can be purchased in stores) so that water does not leak from the gap of the cable connected to the outside.

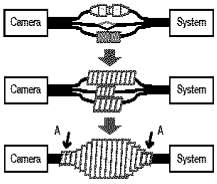

1. Connect the power, I/O, AUDIO, and LAN cables.
2. Wrap the black cable jacket (Area A) and the cable connection area with waterproof (butyl rubber) tape so that more than half of the butyl rubber tape is overlapped.

- If the cable jacket is not waterproofed properly, then it can directly cause leakage. Make sure to protect the cable with a dense layer of taping.
- Waterproof butyl tape is made of butyl rubber that can be stretched to twice its normal length.

Adjusting the monitoring direction for the camera (QND-6073R/QND-6083R/ QNV-6073R/QNV-6083R)

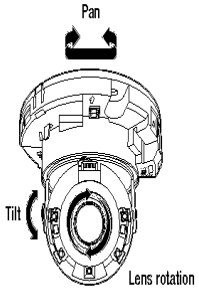

- Adjusting the monitoring direction

You can adjust the camera direction only when the camera is fixed on the ceiling.
Where, rotating the camera unit to the left or right is called Pan, adjusting the tilt is called Tilt, and turning the lens on its axis is called Rotation.

- The effective range of pan is a total of 350 degrees.
- The effective range of rotation is a total of 355 degrees.
- The effective range of tilt is a total of 67 degrees.

- The image can be covered up by the camera case depending on the angle.
- Do not forcefully turn the focus/zoom lens after the dome case is disassembled. Otherwise, it may cause an incorrect focus due to a motor failure.

- Methods of adjustment

1. After installing the camera, adjust the panning angle in consideration of the monitoring direction.
2. Set the horizontal angle so that the image is not reversed.
3. Adjust the tilt angle so that the camera faces toward the monitoring object.

INSERTING/REMOVING A MICRO SD MEMORY CARD

- Disconnect the power cable from the camera before inserting the Micro SD memory card.
- Do not insert the Micro SD memory card while it's upside down by force. Otherwise, it may damage the Micro SD memory card.
- When it rains or the humidity is high, insertion or ejection of a Micro SD card is not recommended.
- Disassembly of the product cover should be finished within 5 minutes, or there will be the risk of internal dew condensation.

Inserting a Micro SD Memory Card (QNO-6073R/QNO-6083R)

1. Turn the front cover to the UNLOCK [ ] direction.

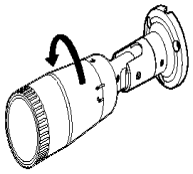

2. Pull and separate the front cover.

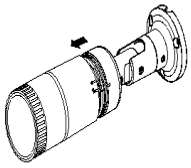

3. Insert a Micro SD card in the arrow direction shown in the figure.

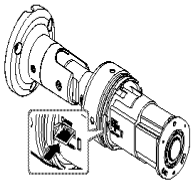

Inserting a Micro SD Memory Card (QND-6073R/QND-6083R/QNV-6073R/QNV-6083R)

1. Separate the Dome cover of the camera.
2. Insert a Micro SD card in the arrow direction shown in the figure.

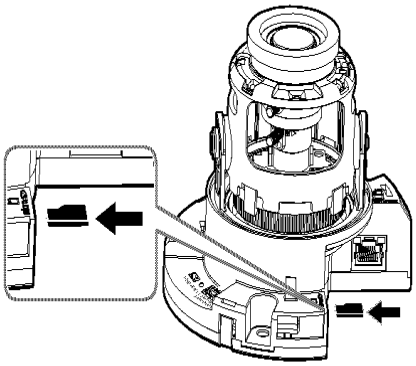

<QND-6073R/6083R>

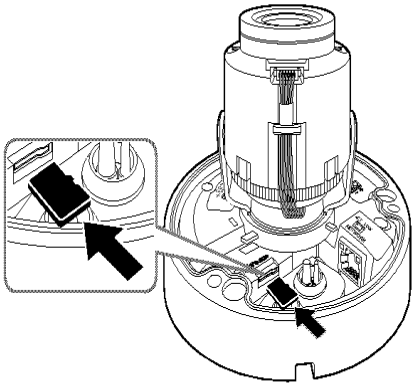

<QNV-6073R/6083R>

Removing a Micro SD Memory Card

Gently press down on the exposed end of the memory card as shown in the diagram to eject the memory card from the slot.

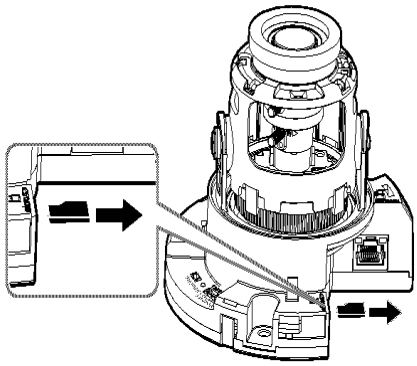

<QND-6073R/6083R>

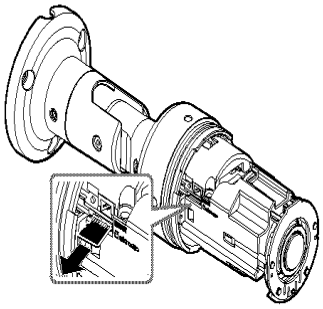

<QNO-6073R>

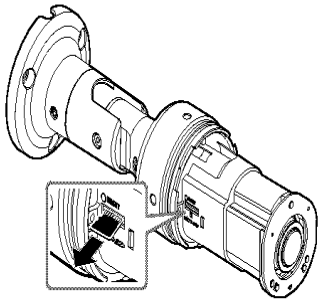

<QNO-6083R>

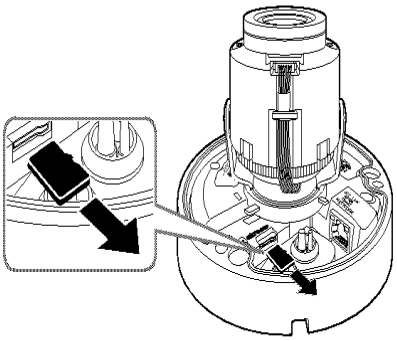

<QNV-6073R/6083R>

- Pressing too hard on the Micro SD memory card can cause the card to shoot out uncontrollably from the slot when released.
- Before removing the Micro SD memory card, in <**Storage**>, set the device to <**Off**> and press the [**Apply**] button and turn the camera off.
- If you turn off the camera or remove the Micro SD memory card that contains data from the product, the data may be lost or damaged.

POWERING AND NETWORKING

- Before plugging the DC 12 V power plug into the outlet, please assemble the terminal block first.

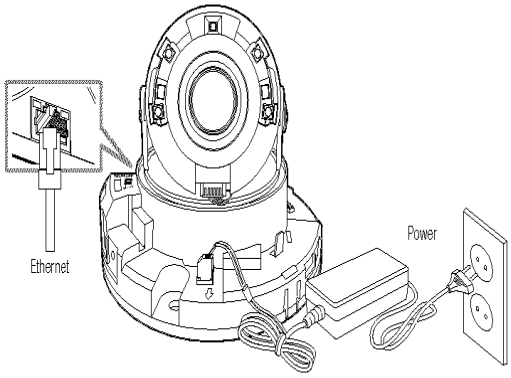

<QND-6073R/6083R>

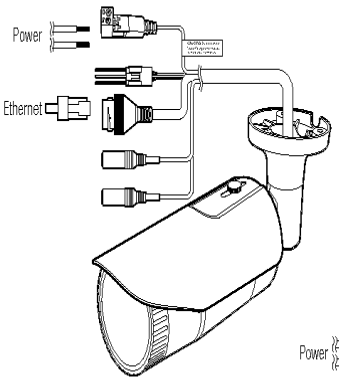

<QNO-6073R/6083R>

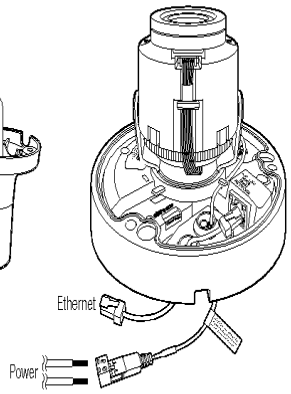

<QNV-6073R/6083R>

installation & connection

Ethernet Connection

Connect the Ethernet cable to the local network or to the Internet.

Power Supply

Use the screwdriver to connect each line (+, –) of the power cable to the corresponding power port of the camera.

- ※ If both PoE and DC 12V are applied simultaneously, the product will be supplied with power from DC 12V.
  - You can also use a router featuring PoE to supply power to the camera.
  - Use PoE that is compliant with the IEEE 802.3af protocols.
  - It is advisable to use only one power source from PoE and DC 12V.
- ※ Be careful not to reverse the polarity when you connect the power cable.
- ※ If you want to connect an external device, you must turn off the external device before proceeding.

Power Cable Specification for Each Model

In case of DC 12V Input:

Wire Type (AWG)	#18	#20	#22
Model Name	Cable Length (Max.)		
QND-6073R/6082R, QNV-6073R/6083R	30m	26m	16m
QNO-6073R/6083R	30m	26m	16m

Network Cable Specification

Item	Contents	Remark
Connector	RJ45	
Ethernet	10/100BASE-T	10/100 Mbps
Cable	Category 5e	
Max Distance	100M	DC Resistance ≤ 0.125 Ω/m
PoE Support	IEEE 802.3af	

※ If you use a cable other than Category 5e standards, 100m of transmission distance is not guaranteed.

Connecting to Audio Input/Output

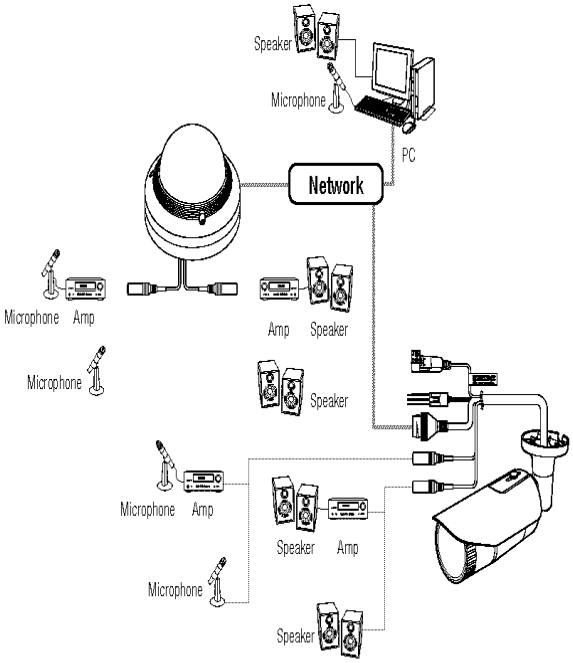

1. Connect the AUDIO IN port of the camera with the microphone or LINE OUT port of the amplifier that the microphone is connected to.
2. Check the specifications for audio input.

※ The QND model supports the built-in microphone only.

- **Audio Codec**
  - Audio In : G.711 PCM (Bit Rate: 64kbps / Sampling Frequency: 8kHz), G.726 ADPCM (Bit Rate: 16Kbps, 24Kbps, 32Kbps, 40Kbps / Sampling Frequency: 8kHz)
  - Audio Out : G.711 PCM (Bit Rate: 64kbps / Sampling Frequency: 8kHz)
- **Full duplex Audio**
- **Audio in** (QND-6073R/6083R) : Built-in microphone
- **Audio in** (QNO-6073R/6083R, QNV-6073R/6083R) : Selectable (microphone/Line-in), Supported voltage: 2.5VDC (4mA), Input impedance: 2K Ohm
- **Audio out** : Line out (3.5mm mono jack), Max output level: 1 Vrms

Connecting to the I/O port box

Connect the Alarm I/O cable to the corresponding port of the port box.

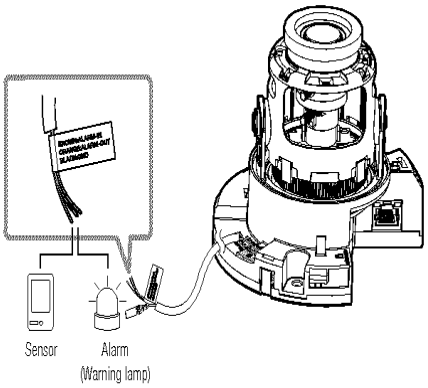

<QND-6073R/6083R>

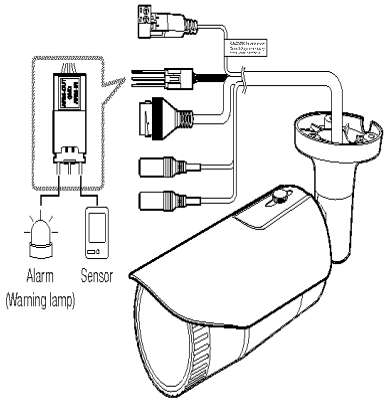

<QNO-6073R/QNO-6083R>

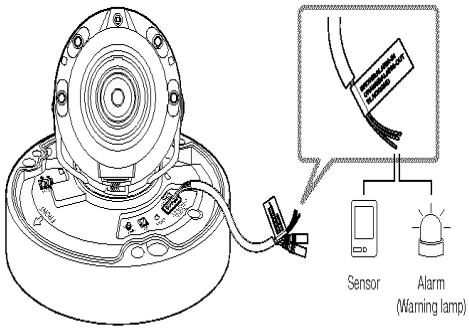

<QNV-6073R/QNV-6083R>

- ALARM-IN : Used to connect the alarm input sensor or external day/night sensor.
- ALARM-OUT : Used to connect the alarm output signal.
- GND : Common port for alarm in/output signal.

- If devices (e.g., flashing light and siren) that exceed the voltage and current specifications are connected by using the open collector method, it may cause malfunction.
  Refer to the "**Alarm Out Wiring Diagram**" when connecting devices that exceed the voltage and current specifications. (page 24)

To connect the external sensor

Connect one strand of each signal line (2-strand) of the sensors to the [**ALARM IN**] port, and connect the other strand to the [**GND**] port.

installation & connection

Alarm In Wiring Diagram

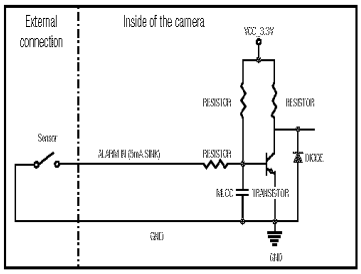

To connect the alarm out

If devices (e.g., flashing light and siren) that exceed the voltage and current specifications are connected by using the open collector method, it may cause malfunction.

Refer to the alarm out connection diagram below when connecting devices that exceed the voltage and current specifications.

Alarm Out Wiring Diagram

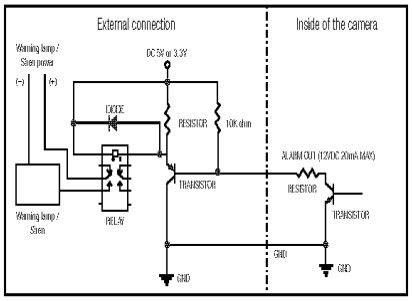

network connection and setup

You can set up the network settings according to your network configurations.

CONNECTING THE CAMERA DIRECTLY TO LOCAL AREA NETWORKING

Connecting to the camera from a local PC in the LAN

1. Launch an Internet browser on the local PC.
2. Enter the IP address of the camera in the address bar of the browser.

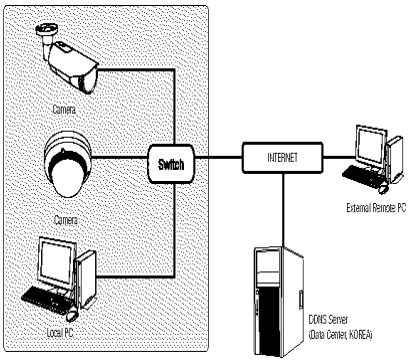

<Local Network>

- A remote PC in an external Internet out of the LAN network may not be able to connect to the camera installed in the intranet if the port-forwarding is not properly set or a firewall is set.
  In this case, to resolve the problem, contact your network administrator.
- In the IP installer, you can use the initial password, "**4321**" to set IP Address, Subnet Mask, Gateway, HTTP Port, VNP Port, IP type. After changing the network interface, for better security, access the web viewer and change the password.
- By factory default, the IP address will be assigned from the DHCP server automatically.
  If there is no DHCP server available, the IP address will be set to 192.168.1.100.
  To change the IP address, use the IP Installer.
  For further details on IP Installer use, refer to "**Static IP Setup**". (Page 26)

CONNECTING THE CAMERA DIRECTLY TO A DHCP BASED DSL/CABLE MODEM

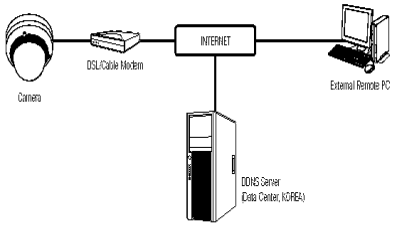

1. Connect the user PC directly with the network camera.
2. Run the IP Installer and change the IP address of the camera so that you can use the web browser on your desktop to connect to the Internet.
3. Use the Internet browser to connect to the web viewer.
4. Move to [**Setup**] page.
5. Move to [**Network**] – [**DDNS**] and configure the DDNS settings.
6. Move to [**Basic**] – [**IP & Port**], and set the IP type to [**DHCP**].
7. Connect the camera, which was removed from your PC, directly to the modem.
8. Restart the camera.

- For information on how to set DDNS, refer to the online help of Web Viewer.
- For information on how to set the IP format, refer to the online help of Web Viewer.

network connection and setup

BUTTONS USED IN IP INSTALLER

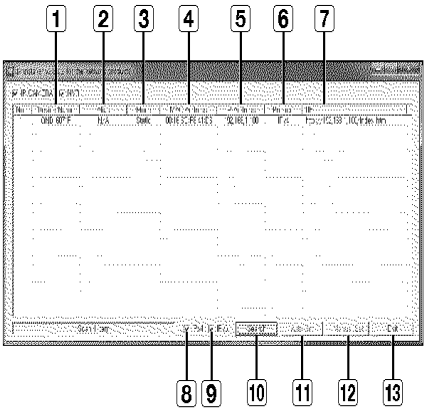

Item	Description
1 Device Name	Model name of the connected camera. Click the column to sort the list by model name. However, search will be stopped if clicked during the search.
2 Alias	This function is not currently implemented.
3 Mode	Displays either <**Static**> or <**Dynamic**> for the current network connection status.
4 MAC(Ethernet) Address	Ethernet address for the connected camera. Click the column to sort the list by Ethernet address. However, search will be stopped if clicked during the search.
5 IP Address	IP address. Click the column to sort the list by IP address. However, search will be stopped if clicked during the search.
6 Protocol	Network setting for the camera. The factory default is "IPv4". Cameras with the IPv6 setting will be displayed "IPv6".
7 URL	DDNS URL address enabling access from the external Internet. However, this will be replaced with the <**IP Address**> of the camera if DDNS registration has failed.
8 IPv4	Scans for cameras with the IPv4 setting.
9 IPv6	Scans for cameras with the IPv6 setting. Activated in an IPv6 compliant environment only.
10 Search	Scans for cameras that are currently connected to the network. However, this button will be grayed out if neither IPv4 nor IPv6 is checked.
11 Auto Set	The IP Installer automatically configures the network settings.
12 Manual Set	You should configure the network settings manually.
13 Exit	Exits the IP Installer program.

- For the IP installer, use only the installer version provided in the installation CD or use the latest one if available. You can download the latest version from the Hanwha Techwin web site.
- If the supporting OS is Windows 8.1, it is recommended that you use the Wisenet Device Manager instead of the IP Wisenet. The Wisenet Device Manager Program can be downloaded by visiting the Hanwha Techwin website (http://www.hanwhasecurity.com) under the menu <**Technical Guides**> - <**Online Tool**>.

STATIC IP SETUP

Manual Network Setup

Run <**IP Installer_v2.XX.exe**> to display the camera search list.
At the initial startup, both [**Auto Set**] and [**Manual Set**] will be grayed out.

- For cameras found with the IPv6 setting, these buttons will be grayed out as the cameras do not support this function.

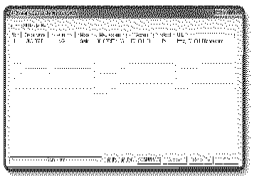

1. Select a camera in the search list.
   Check the MAC address of the camera on the camera's label.
   Both the [**Auto Set**] and [**Manual Set**] buttons will be activated.
2. Click [**Manual Set**].
   The Manual Setting dialog appears.
   <**IP Address**>, <**Subnet Mask**>, <**Gateway**>, <**HTTP Port**>, and <**VNP Port**> of the camera are displayed in the preset values.
3. In the <**Address**> pane, provide the necessary information.
   - MAC (Ethernet) Address : The MAC address imprinted on the camera label is automatically displayed and requires no user setting.

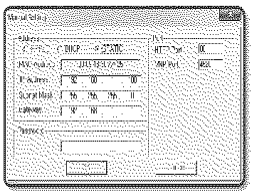

- IP related parameters can be set only when DHCP is not checked.

If not using a Broadband Router

For setting <**IP Address**>, <**Subnet Mask**>, and <**Gateway**>, contact your network administrator.

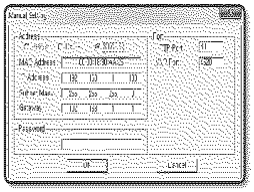

4. In the <**Port**> pane, provide necessary information.
   - HTTP Port : Used to access the camera using the Internet browser, defaulted to 80.
   - VNP Port : Used to control the video signal transfer, defaulted to 4520.
5. Enter the password.
   Enter the password of "**admin**" account, which was used to access the camera.

※ For the security purposes, you are recommended to use a combination of numbers, alphabets uppercase and lowercase and special characters for your password.

※ For information on how to change the password, refer to the online help of Web Viewer.

6. Click [**OK**].
   Manual network setup will be completed.

If using a Broadband Router

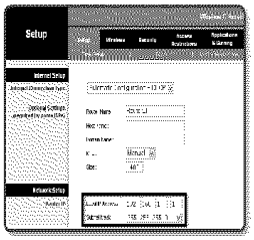

- IP Address : Enter an address falling in the IP range provided by the Broadband Router.
  ex) 192.168.1.2~254, 192.168.0.2~254,
  192.168.XXX.2~254
- Subnet Mask : The <**Subnet Mask**> of the Broadband Router will be the <**Subnet Mask**> of the camera.
- Gateway : The <**Local IP Address**> of the Broadband Router will be the <**Gateway**> of the camera.

※ The settings may differ depending on the connected Broadband Router model.
For more information, refer to the user manual of the applicable router.

※ For more information about port forwarding of the broadband router, refer to "**Port Range Forward (Port Mapping) Setup**". (Page 28)

If the Broadband Router has more than one camera connected

Configure the IP related settings and the Port related settings distinctly with each other.

ex)

Category		Camera #1	Camera #2
IP related settings	IP Address Subnet Mask Gateway	192.168.1.100 255.255.255.0 192.168.1.1	192.168.1.101 255.255.255.0 192.168.1.1
Port related settings	HTTP Port VNP Port	8080 4520	8081 4521

※ If the <**HTTP Port**> is set other than 80, you must provide the <**Port**> number in the address bar of the Internet browser before you can access the camera.
ex) http://IP address : HTTP Port
http://192.168.1.100:8080

Auto Network Setup

Run <**IP Installer_v2.XX.exe**> to display the camera search list.
At the initial startup, both [**Auto Set**] and [**Manual Set**] will be grayed out.

※ For cameras found with the IPv6 setting, these buttons will be grayed out as the cameras do not support this function.

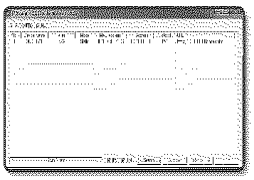

1. Select a camera in the search list.
   Check the MAC address of the camera on the camera's label.
   Both the [**Auto Set**] and [**Manual Set**] buttons will be activated.
2. Click [**Auto Set**].
   The Auto Setting dialog appears.
   The <**IP Address**>, <**Subnet Mask**>, and <**Gateway**> will be set automatically.

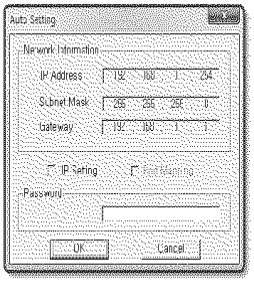

3. Enter the password.
   Enter the password of "**admin**" account, which was used to access the camera.

※ For the security purposes, you are recommended to use a combination of numbers, alphabets uppercase and lowercase and special characters for your password.

※ For information on how to change the password, refer to the online help of Web Viewer.

4. Click [**OK**].
   Auto network setup will be completed.

network connection and setup

DYNAMIC IP SETUP

Dynamic IP Environment Setup

- Example of the Dynamic IP environment
  - If a Broadband Router, with cameras connected, is assigned an IP address by the DHCP server
  - If connecting the camera directly to modem using the DHCP protocols
  - If IPs are assigned by the internal DHCP server via the LAN

Checking the Dynamic IP

1. Run the IP Installer on the user's local computer.
   Cameras allocated with <**Dynamic IP**> address are shown in the list.
2. Select a camera from the search result.
3. Click the [**Manual Set**] button and check the camera's <**Dynamic IP**> address.
   If you uncheck <**DHCP**>, you can change IP to <**Static**>.

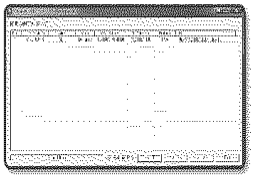

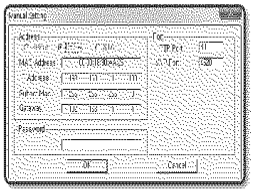

PORT RANGE FORWARD (PORT MAPPING) SETUP

If you have installed a Broadband Router with a camera connected, you must set the port range forwarding on the Broadband Router so that a remote PC can access the camera in it.

Manual Port Range Forwarding

1. From the Setup menu of the Broadband Router, select <**Applications & Gaming**> - <**Port Range Forward**>.
   For setting the port range forward for a third-party Broadband Router, refer to the user guide of that Broadband Router.
2. Select <**TCP**> and <**UDP Port**> for each connected camera to the Broadband Router.
   The number of each port to be configured to the IP router should be set according to the port number designated in <**Setup**> - <**Basic**> - <**IP & Port**> on the camera web viewer.

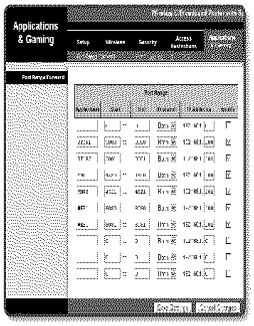

3. When done, click [**Save Settings**].
   Your settings will be saved.

- Above sample instructions are based on the CISCO's Broadband Router.
- The settings may differ depending on the connected Broadband Router model.
  For more information, refer to the user manual of the applicable router.

Setting up Port Range Forward for several network cameras

- You can set a rule of Port Forwarding on the Broadband Router device through its configuration web page.
- A user can change each port using the camera setting screen.

When Camera1 and Camera2 are connected to a router :

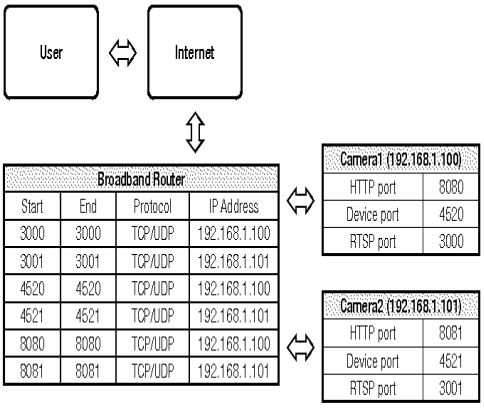

- Port forwarding can be done without additional router setup if the router supports the UPnP (Universal Plug and Play) function.
  After connecting the network camera, select the checkbox from the menu <**Quick connect**> in <**Wisenet DDNS**> in "**Settings → Network → DDNS**".

CONNECTING TO THE CAMERA FROM A SHARED LOCAL PC

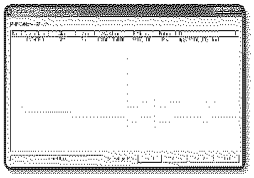

1. Run the IP Installer.
   It will scan for connected cameras and display them as a list.
2. Double-click a camera to access.
   The Internet browser starts and connects to the camera.

※ Access to the camera can also be gained by typing the camera's IP address in the address bar of the Internet browser.

CONNECTING TO THE CAMERA FROM A REMOTE PC VIA THE INTERNET

Since using the IP Installer on a remote computer that is not in the Broadband Router's network cluster is not allowed, users can access cameras within a Broadband Router's network by using the camera's DDNS URL.

1. Before you can access a camera in the Broadband Router network, you should have set the port range forward for the Broadband Router.
2. From the remote PC, launch the Internet browser and type the DDNS URL address of the camera, or the IP address of the Broadband Router in the address bar.
   ex) http://ddns.hanwha-security.com/ID

※ For information on how to register DDNS, refer to the network setup guide.

web viewer

CONNECTING TO THE CAMERA

Normally, you would

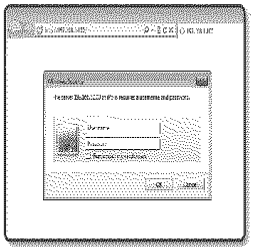

1. Launch the Internet browser.
2. Type the IP address of the camera in the address bar.
   ex) • IP address (IPv4) : 192.168.1.100 ➜ http://192.168.1.100
   - the Login dialog should appear.
   • IP address (IPv6) : 2001:230:abcd: ffff:0000:0000:ffff:1111 ➜ http://[2001:230:abcd:ffff:0000:0000:ffff:1111] - the Login dialog should appear.

If the HTTP port is other than 80

1. Launch the Internet browser.
2. Type the IP address and HTTP port number of the camera in the address bar.
   ex) IP address : 192.168.1.100:HTTP Port number(8080)
   ➜ http://192.168.1.100:8080 - the Login dialog should appear.

Using URL

1. Launch the Internet browser.
2. Type the DDNS URL of the camera in the address bar.
   ex) URL address : http://ddns.hanwha-security.com/ID
   - the Login dialog should appear.

※ Network connection is disabled in the LAN only environment.

Connecting via UPnP

1. Run the client or operating system in support of the UPnP protocol.
2. Click the camera name for search.
   In the Windows operating system, click the camera name searched from the network menu.
   - The login window is displayed.

Connecting via Bonjour

1. Run the client or operating system in support of the Bonjour protocol.
2. Click the camera name for search.
   In the Mac operating system, click the camera name searched from the Bonjour tab of Safari.
   - The login window is displayed.

To check the DDNS address

If the camera is connected directly to the DHCP cable modem, DSL modem, the IP address of your network will be changed each time you try to connect to the ISP (Internet Service Provider) server.
If this is the case, you will not be informed of the IP address changed by DDNS.

Once you register a dynamic IP-based device with the DDNS server, you can easily check the changed IP when you try to access the device.
To register your device to the <**DDNS**> server, visit http://ddns.hanwha-security.com and register your device first, and then set the Web Viewer's <**Network**> - <**DDNS**> to <**Wisenet DDNS**>, as well as providing <**Product ID**> that had been used for DDNS registration.

PASSWORD SETTING

When you access the product for the first time, you must register the login password.
When the "**Password change**" window appears, enter the new password.

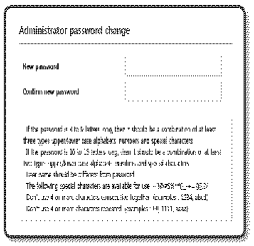

- For a new password with 8 to 9 digits, you must use at least 3 of the following: uppercase/lowercase letters, numbers and special characters. For a password with 10 to 15 digits, you must use at least 2 types of those mentioned.
  - Special characters that are allowed. : ~`!@#$%^*()_-+=|{}[].?/
- For higher security, you are not recommended to repeat the same characters or consecutive keyboard inputs for your passwords.
- If you lost your password, you can press the [**RESET**] button to initialize the product. So, don't lose your password by using a memo pad or memorizing it.

LOGIN

Whenever you access the camera, the login window appears.
Enter the User ID and password to access the camera.

1. Enter "**admin**" in the <**User name**> input box.
   The administrator ID, "**admin**", is fixed and can not be changed.
2. Enter the password in the <**Password**> input field.
3. Click [**OK**].
   If you have logged in successfully, you will the Live Viewer screen.

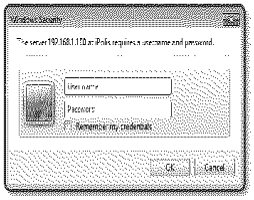

- When you access the camera web viewer, pay special attention to the security by checking whether the image data is encrypted.

- If you check the "**Remember my credentials**" option when your input is done, in future you will be logged in automatically without being prompted to enter the login information.
- You will experience the best video quality if the screen size is 100%. Reducing the ratio may cut the image on the borders.

CAMERA WEB VIEWER SETUP

1. Click the [**Setup** (⚙)] icon.
2. The Settings window appears.
3. You can configure settings for the camera's basic information, video, audio, network, event, analysis, and system over the network.
4. Click <**Help** (?)> to view detailed descriptions of each function.

SPECIFICATION

Items		Description		
		QND-6073R/QND-6083R	QNO-6073R/QNO-6083R	QNV-6073R/QNV-6083R
Video	Imaging Device	1/2.8" 2MP CMOS		
	Effective Pixels	1920(H) x 1080(V)		
	Min. Illumination	Color: 0.095Lux(F1.6, 1/30sec) BW: 0Lux(IR LED on)		
	Video Out	CVBS: 1.0 Vp-p / 75Ω composite, 720x480(N), 720x576(P) for installation		
Lens	Focal Length (Zoom Ratio)	QND-6073R/QNO-6073R/QNV-6073R : 3.2~10mm(3.1x) manual varifocal QND-6083R/QNO-6083R/QNV-6083R : 3.2~10mm(3.1x) motorized varifocal		
	Max. Aperture Ratio	F1.6(Wide)~F2.9(Tele)		
	Angular Field of View	H: 109.0° (Wide) ~ 33.2° (Tele) / V: 57.4° (Wide) ~ 18.7° (Tele) / D: 132.0° (Wide) ~ 38.0° (Tele)		
	Focus control	QND-6073R/QNO-6073R/QNV-6073R : Manual QND-6083R/QNO-6083R/QNO-6083R : Simple focus		
Pan / Tilt /Rotate	Pan / Tilt / Rotate Range	0°~350° / 0°~67° / 0°~355°	-	0°~350° / 0°~67° / 0°~355°
Operational	IR Viewable Length	20m(65.62ft)	30m(98.42ft)	
	Camera Title	Displayed up to 85 characters		
	Day & Night	Auto (ICR)		
	Backlight Compensation	BLC, WDR, SSDR		
	Wide Dynamic Range	120dB		
	Digital Noise Reduction	SSNR		

Items		Description	
		QND-6073R/QND-6083R	QNO-6073R/QNO-6083R / QNV-6073R/QNV-6083R
Operational	Motion Detection	4ea, polygonal zones	
	Privacy Masking	6ea, rectangular zones	
	Gain Control	Low / Middle / High	
	White Balance	ATW / AWC / Manual / Indoor	
	LDC (Lens distortion control)	Support	
	Electronic Shutter Speed	Minimum / Maximum / Anti flicker (1/5~1/12,000 sec)	
	Video Rotation	Flip, Mirror, Hallway view(90°/270°)	
	Analytics	Defocus detection, Directional detection, Motion detection, Enter/Exit, Tampering, Virtual line	
	Alarm I/O	Input 1ea / Output 1ea	
	Alarm Triggers	Analytics, Network disconnect, Alarm input	
	Alarm events	• File upload via FTP, E-Mail • Notification via E-Mail • SD/SDHC/SDXC or NAS recording at event triggers • Alarm output	
	Audio In	Built-in mic	Selectable(mic in/line in) Supply voltage: 2.5VDC(4mA), Input impedance: 2K Ohm
	Audio out	Line out, Max.output level: 1Vrms	
Network	Ethernet	RJ-45 (10/100BASE-T)	
	Video Compression Format	H.265/H.264: Main/High, MJPEG	
	Resolution	1920 x 1080, 1280 x 960, 1280 x 720, 800 x 600, 800 x 448, 720 x 576, 720 x 480, 640 x 480, 640 x 360	
	Max. Framerate	H.265/H.264: Max. 30fps/25fps(60Hz/50Hz) MJPEG: Max. 15fps/12fps(60Hz/50Hz)	
	Smart Codec	WiseStream II	
	Video Quality Adjustment	H.264/H.265: Target bitrate level control MJPEG: Quality Level control	

Items		Description		
		QND-6073R/QND-6083R	QNO-6073R/QNO-6083R	QNV-6073R/QNV-6083R
Network	Bitrate Control	H.264/H.265 : CBR or VBR MJPEG : VBR		
	Streaming	Streaming Capability : Multiple streaming (Up to 3 profiles) Streaming Method : Unicast / Multicast Max. User Access : 6 users at Unicast Mode		
	Audio Compression	G.711 μ-law /G.726 Selectable G.726 (ADPCM) 8KHz, G.711 8KHz G.726 : 16Kbps, 24Kbps, 32Kbps, 40Kbps		
	Protocol	IPv4, IPv6, TCP/IP, UDP/IP, RTP(UDP), RTP(TCP), RTCP, RTSP, NTP, HTTP, HTTPS, SSL/TLS, DHCP, FTP, SMTP, ICMP, IGMP, SNMPv1/v2c/v3(MIB-2), ARP, DNS, DDNS, QoS, UPnP, Bonjour, LLDP		
	Security	HTTPS(SSL) Login Authentication Digest Login Authentication IP Address Filtering User access Log 802.1x Authentication (EAP-TLS, EAP-LEAP)		
	Edge Storage	Micro SD/SDHC/SDXC 1slot 128GB		
	Application Programming Interface	ONVIF Profile S/G/T SUNAPI(HTTP API) Wisenet open platform		
	Webpage Language	English, Korean, Chinese, French, Italian, Spanish, German, Japanese, Russian, Swedish, Portuguese, Czech, Polish, Turkish, Dutch, Hungarian, Greek		
	Web Viewer	Supported OS: Windows 7, 8.1, 10, Mac OS X 10.12, 10.13, 10.14 Recommended Browser: Google Chrome Supported Browser: MS Explore11, MS Edge, Mozilla Firefox(Window 64bit only), Apple Safari(Mac OS X only)		
	Memory	512MB RAM, 256MB Flash		

Items		Description		
		QND-6073R/QND-6083R	QNO-6073R/QNO-6083R	QNV-6073R/QNV-6083R
Environmental	Operating Temperature / Humidity	-10°C ~ +55°C (14°F ~ +131°F) / Less than 90% RH	-30°C ~ +55°C (-22°F ~ +131°F) / Less than 90% RH * Start up should be done at above -20°C	
	Storage Temperature / Humidity	-30°C ~ +60°C (-22°F ~ +140°F) / Less than 90% RH		
	Certification	-	IP66, IK10	
Electrical	Input Voltage	PoE(IEEE802.3af, Class3), 12VDC		
	Power Consumption	PoE: Max 7.5W, typical 6W 12VDC: Max 6.5W, typical 5.1W	PoE: Max 7.4W, typical 5.4W 12VDC: Max 6.5W, typical 4.8W	PoE: Max 7.5W, typical 6W 12VDC: Max 6.5W, typical 5.1W
Mechanical	Color / Material	White / Plastic	Dark grey / Aluminum	White / Aluminum
	RAL Code	RAL9003	-	RAL9003
	Product dimensions / weight	Ø119.6x98.8mm (Ø4.72x3.89"), 320 g	QNO-6073R: Ø78.0x259.8mm (Ø3.07x10.2"), 730 g QNO-6083R: Ø78.0x259.8mm (Ø3.07x10.2"), 900 g	Ø137.0x106.1mm (Ø5.39x4.18"), 710 g

PRODUCT OVERVIEW

QND-6073R/QND-6083R

Unit : mm (inch)

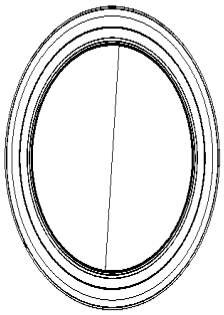

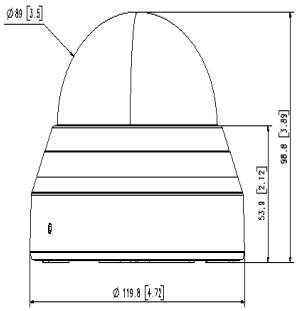

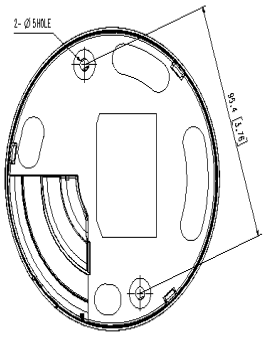

QNO-6073R

Unit : mm (inch)

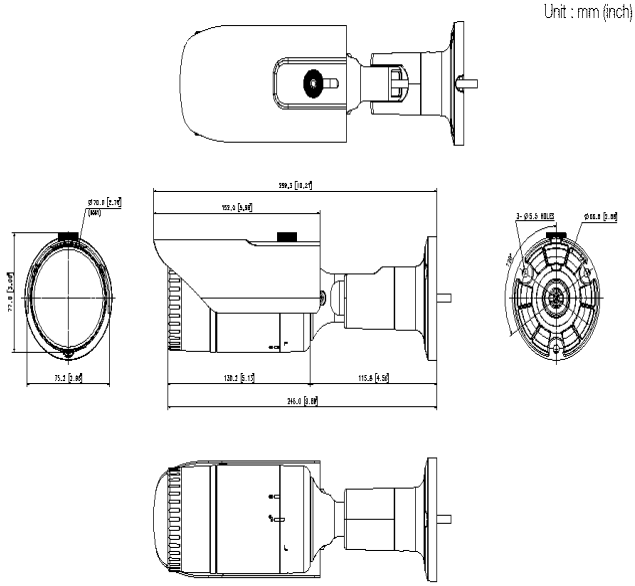

QNO-6083R

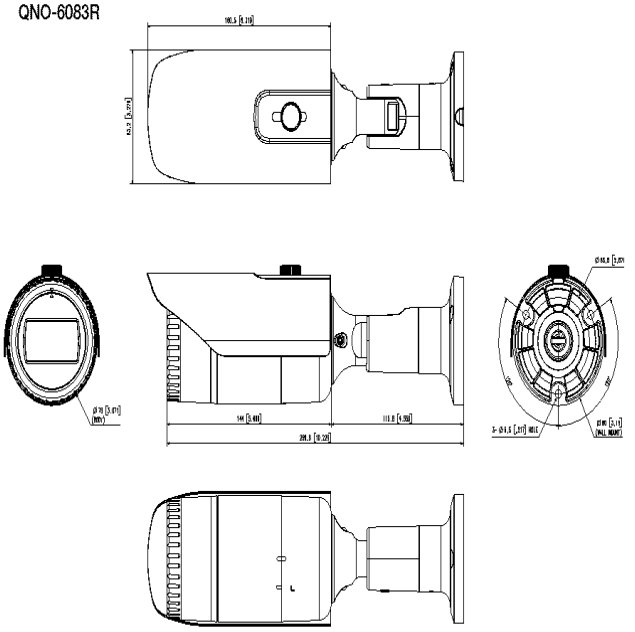

QNV-6073R/QNV-6083R

Unit : mm (inch)

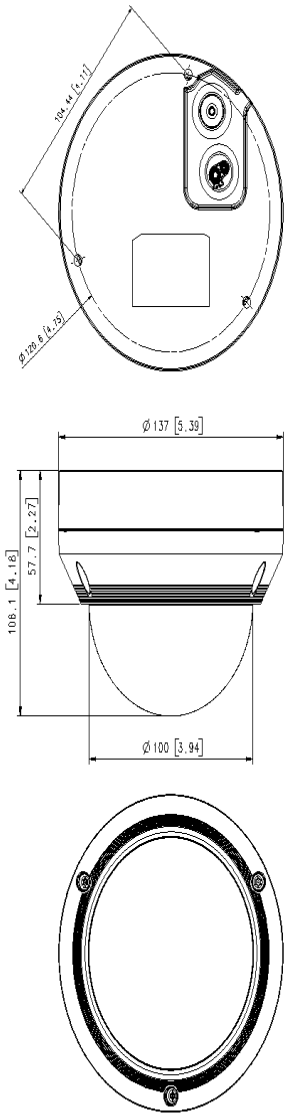

TROUBLESHOOTING

PROBLEM	SOLUTION
No video is displayed when accessing the plug-in free webviewer on Safari via HTTPS.	• On the authentication popup window prompted when initially accessing https, click "View Authentication Certificate" and select the "Always trust when connecting to the designated webviewer IP" check box. • If the webviewer continues failing to display a video after you select "Next" on the message window below, press the command key + Q to exit the Safari browser, access again and follow the procedures stated above.
I can't access the camera from a web browser.	• Check to make sure that the camera's Network settings are appropriate. • Check to make sure that all network cables have been connected properly. • If connected using DHCP, verify that the camera is able to acquire dynamic IP addresses without any problem. • If the camera is connected to a Broadband Router, verify that port forwarding is properly configured.
Viewer got disconnected during monitoring.	• Connected Viewers become disconnected upon any change to camera or network configurations. • Check all network connections.
No video is displayed when I newly access the webviewer or connect streaming to the client.	• The maximum number of profiles available is 3. The connection may be lost if you use 4 or more of profiles. Example) If you access MJPEG, H264 and H265 and then access with a different profile, the connection will be lost.
The camera connected to the network is not detected in the IP installer program.	• Turn off the firewall settings on your PC and then search the camera again.
Images overlap.	• Check whether two or more cameras are set to a single multicast address instead of different addresses. If a single address is used for multiple cameras, the images may overlap.
No image appears.	• If the transmission method is set to multicast, check whether there is a router that supports multicast in the LAN the camera is connected to.
Voice is not recorded even though audio input settings are configured.	• You must enable the <Audio In> check box in <Basic> - <Video Profile>.

PROBLEM	SOLUTION
<Motion detection> of <Analytics> is set to <Enable>, but no notification e-mail reaches me even when an analysis event had occurred.	• Verify the settings in the following sequence: A. Check <Data & Time> settings. B. The <Motion detection> should be set to <Enable>. C. Check if the <E-mail> option of <Event setup> menu is checked to use.
Cannot record into the Micro SD memory card.	• Check if the memory card is detective.
Micro SD memory card is inserted but the camera does not operate properly.	• Check if the memory card is inserted in the proper direction. Operation of memory card that is formatted by other devices is not guaranteed with this camera unit • Format the memory card again in <Setup> → <Event> → <Storage> menu.
Cannot record in the NAS.	• Confirm that the information registered in the NAS is correct.
It reports that NAS setting has failed.	• Confirm that the IP address of the NAS is valid. • Confirm that the ID/password of the NAS is valid. • Confirm that you can access the folder designated as the default folder using the ID of the NAS. • Confirm that the NAS SMB/CIFS items are unchecked. • Confirm that the NAS IP address and the camera IP address are in the same format. ex) The NAS & camera subnet mask initial value is 255.255.255.0. If the IP address is 192.168.20.32 then the NAS IP address should be in the range of 192.168.20.1~192.168.20.255. • Check whether you tried to access as another user without formatting the default folder saved or used. • Confirm that you used recommended NAS equipment.

OPEN SOURCE ANNOUNCEMENT

GPL/LGPL software license

The software included in this product contains copyrighted software that is licensed under the GPL/LGPL. You may obtain the complete Corresponding Source code from us for a period of three years after our last shipment of this product by sending email to help.cctv@hanwha.com

If you want to obtain the complete Corresponding Source code in the physical medium such as CD-ROM, the cost of physically performing source distribution might be charged.

GPL SW

Component Name	License	URL
Base Kernel	GPL 2.0	
Busybox	GPL 2.0	http://www.busybox.net/downloads/snapshots
iproute2-4.3.0	GPL 2.0	
iptables-1.4.21	GPL 2.0	http://ftp.netfilter.org/pub/iptables
ethtool-4.2	GPL 2.0	
mtd-1.5.2	GPL 2.0	ftp://ftp.infradead.org/pub/mtd-utils
mii-diag-2.11	GPL 2.0	
rp-pppoe-3.11	GPL 2.0	http://www.roaringpenguin.com/pppoe/
wpa_supplicant-2.5	GPL 2.0	
bash-4.3.30	GPL 3.0	
zeroconf	GPL 2.0	

LGPL SW

Component Name	License	URL
gLibc	LGPL 2.0	
Inetutils	LGPL 3.0	
neon-0.29.6	LGPL 2.0	http://www.webdav.org/neon/

GNU GENERAL PUBLIC LICENSE

Version 2, June 1991

Copyright (C)1989, 1991 Free Software Foundation, Inc. 51 Franklin Street,Fifth Floor. Boston, MA 02110-1301, USA

Everyone is permitted to copy and distribute verbatim copies of this license document, but changing it is not allowed.

Preamble

The licenses for most software are designed to take away your freedom to share and change it. By contrast. the GNU General Public License is intended to guarantee your freedom to share and change free software-- to make sure the software is free for all its users. This General Public License applies to most of the Free Software Foundation's software and to any other program whose authors commit to using it. (Some other Free Software Foundation software is covered by the GNU Lesser General Public License instead.) You can apply it to your programs, too. When we speak of free software, we are referring to freedom, not price. Our General Public Licenses are designed to make sure that you have the freedom to distribute copies of free software (and charge for this service if you wish), that you receive source code or can get it if you want it, that you can change the software or use pieces of it in new free programs ; and that you know you can do these things.

To protect your rights, we need to make restrictions that forbid anyone to deny you these rights or to ask you to surrender the rights. These restrictions translate to certain responsibilities for you if you distribute copies of the software, or if you modify it.

For example, if you distribute copies of such a program, whether gratis or for a fee, you must give the recipients all the rights that you have.

You must make sure that they, too, receive or can get the source code. And you must show them these terms so they know their rights. We protect your rights with two steps :

(1)copyright the software, and (2)offer you this license which gives you legal permission to copy, distribute and/or modify the software. Also. for each author's protection and ours, we want to make certain that everyone understands that there is no warranty for this free software. If the software is modified by someone else and passed on, we want its recipients to know that what they have is not the original, so that any problems introduced by others will not reflect on the original authors' reputations.

Finally, any free program is threatened constantly by software patents. We wish to avoid the danger that redistributors of a free program will individually obtain patent licenses, in effect making the program proprietary. To prevent this, we have made it clear that any patent must be licensed for everyone's free use or not licensed at all. The precise terms and conditions for copying, distribution and modification follow.

TERMS AND CONDITIONS FOR COPYING, DISTRIBUTION AND MODIFICATION

Version 2, June 1991 Copyright (C) 1989, 1991 Free Software Foundation, Inc. 51 Franklin S

0. This License applies to any program or other work which contains a notice placed by the copyright holder saying it may be distributed under the terms of this General Public License.

The "Program", below, refers to any such program or work, and a "work based on the Program" means either the Program or any derivative work under copyright law : that is to say, a work containing the Program or a portion of it, either verbatim or with modifications and/or translated into another language. (Hereinafter. translation is included without limitation in the term "modification".) Each licensee is addressed as "you".
Activities other than copying. distribution and modification are not covered by this License ; they are outside its scope. The act of running the Program is not restricted, and the output from the Program is covered only if its contents constitute a work based on the Program (independent of having been made by running the Program). Whether that is true depends on what the Program does.

1. You may copy and distribute verbatim copies of the Program's source code as you receive it. in any medium, provided that you conspicuously and appropriately publish on each copy an appropriate copyright notice and disclaimer of warranty; keep intact all the notices that refer to this License and to the absence of any warranty ; and give any other recipients of the Program a copy of this License along with the Program.
You may charge a fee for the physical act of transferring a copy, and you may at your option offer warranty protection in exchange for a fee.

2. You may modify your copy or copies of the Program or any portion of it, thus forming a work based on the Program. and copy and distribute such modifications or work under the terms of Section 1 above. provided that you also meet all of these conditions :

a) You must cause the modified files to carry prominent notices stating that you changed the files and the date of any change.

b) You must cause any work that you distribute or publish, that in whole or in part contains or is derived from the Program or any part thereof. to be licensed as a whole at no charge to all third parties under the terms of this License.

c) If the modified program normally reads commands interactively when run,you must cause it, when started running for such interactive use in the most ordinary way, to print or display an announcement including an appropriate copyright notice and a notice that there is no warranty (or else. saying that you provide a warranty) and that users may redistribute the program under these conditions, and telling the user how to view a copy of this License. (Exception:if the Program itself is interactive but does not normally print such an announcement, your work based on the Program is not required to print an announcement.)

These requirements apply to the modified work as a whole. If identifiable sections of that work are not derived from the Program, and can be reasonably considered independent and separate works in themselves, then this License, and its terms, do not apply to those sections when you distribute them as separate works. But when you distribute the same sections as part of a whole which is a work based on the Program, the distribution of the whole must be on the terms of this License, whose permissions for other licensees extend to the entire whole, and thus to each and every part regardless of who wrote it.

Thus, it is not the intent of this section to claim rights or contest your rights to work written entirely by you : rather, the intent is to exercise the right to control the distribution of derivative or collective works based on the Program. In addition. mere aggregation of another work not based on the Program with the Program (or with a work based on the Program)on a volume of a storage or distribution medium does not bring the other work under the scope of this License.

3. You may copy and distribute the Program (or a work based on it. under Section 2)in object code or executable form under the terms of Sections 1 and 2 above provided that you also do one of the following :

a) Accompany it with the complete corresponding machine-readable source code. which must be distributed under the terms of Sections 1 and 2 above on a medium customarily used for software interchange : or.

b) Accompany it with a written offer. valid for at least three years. to give any third party, for a charge no more than your cost of physically performing source distribution, a complete machinereadable copy of the corresponding source code. to be distributed under the terms of Sections 1 and 2 above on a medium customarily used for software interchange : or.

c) Accompany it with the information you received as to the offer to distribute corresponding source code. (This alternative is allowed only for noncommercial distribution and only if you received the program in object code or executable form with such an offer, in accord with Subsection b above.) The source code for a work means the preferred form of the work for making modifications to it. For an executable work, complete source code means all the source code for all modules it contains, plus any associated interface definition files, plus the scripts used to control compilation and installation of the executable. However, as a special exception, the source code distributed need not include anything that is normally distributed (in either source or binary form) with the major

components (compiler. kernel, and so on) of the operating system on which the executable runs, unless that component itself accompanies the executable. If distribution of executable or object code is made by offering access to copy from a designated place, then offering equivalent access to copy the source code from the same place counts as distribution of the source code. even though third parties are not compelled to copy the source along with the object code.

4. You may not copy, modify, sublicense, or distribute the Program except as expressly provided under this License. Any attempt otherwise to copy. modify. sublicense or distribute the Program is void, and will automatically terminate your rights under this License.

However. parties who have received copies, or rights, from you under this License will not have their licenses terminatedso long as such parties remain in full compliance.

5. You are not required to accept this License, since you have not signed it. However, nothing else grants you permission to modify or distribute the Program or its derivative works.

These actions are prohibited by law if you do not accept this License.Therefore, by modifying or distributing the Program (or any work based on the Program), you indicate your acceptance of this License to do so, and all its terms and conditions for copying, distributing or modifying the Program or works based on it.

6. Each time you redistribute the Program (or any work based on the Program), the recipient automatically receives a license from the original licensor to copy, distribute or modify the Program subject to these terms and conditions. You may not impose any further restrictions on the recipients' exercise of the rights granted herein. You are not responsible for enforcing compliance by third parties to this License.

7. If, as a consequence of a court judgment or allegation of patent infringement or for any other reason (not limited to patent issues), conditions are imposed on you (whether by court order, agreement or otherwise)that contradict the conditions of this License. they do not excuse you from the conditions of this License. If you cannot distribute so as to satisfy simultaneously your obligations under this License and any other pertinent obligations, then as a consequence you may not distribute the Program at all.

For example, if a patent license would not permit royaltyfree redistribution of the Program by all those who receive copies directly or indirectly through you. then the only way you could satisfy both it and this License would be to refrain entirely from distribution of the Program.

If any portion of this section is held invalid or unenforceable under any particular circumstance. the balance of the section is intended to apply and the section as a whole is intended to apply in other circumstances. It is not the purpose of this section to induce you to infringe any patents or other property right claims or to contest validity of any such claims: this section has the sole purpose of protecting the integrity of the free software distribution system. which is implemented by public license practices. Many people have made generous contributions to the wide range of software distributed through that system in reliance on consistent application of that system ; it is up to the author/donor to decide if he or she is willing to distribute software through any other system and a licensee cannot impose that choice. This section is intended to make thoroughly clear what is believed to be a consequence of the rest of this License.

8. If the distribution and/or use of the Program is restricted in certain countries either by patents or by copyrighted interfaces, the original copyright holder who places the Program under this License may add an explicit geographical distribution limitation excluding those countries,so that distribution is permitted only in or among countries not thus excluded. In such case, this License incorporates the limitation as if written in the body of this License.

9. The Free Software Foundation may publish revised and/or new versions of the General Public License from time to time. Such new versions will be similar in spirit to the present version, but may differ in detail to address new problems or concerns. Each version is given a distinguishing version number. If the Program specifies a version number of this License which applies to it and "any later version", you have the option of following the terms and conditions either of that version or of any later version published by the Free Software Foundation. If the Program does not specify a version number of this License. you may choose any version ever published by the Free Software Foundation.

10. If you wish to incorporate parts of the Program into other free programs whose distribution conditions are different. write to the author to ask for permission. For software which is copyrighted by the Free Software Foundation,write to the Free Software Foundation : we sometimes make exceptions for this. Our decision will be guided by the two goals of preserving the free status of all derivatives of our free software and of promoting the sharing and reuse of software generally.

NO WARRANTY

11. BECAUSE THE PROGRAM IS LICENSED FREE OF CHARGE, THERE IS NO WARRANTY FOR THE PROGRAM, TO THE EXTENT PERMITTED BY APPLICABLE LAW. EXCEPT WHEN OTHERWISE STATED IN WRITING THE COPYRIGHT HOLDERS AND/OR OTHER PARTIES PROVIDE THE PROGRAM "ASIS" WITHOUT WARRANTY OF ANY KIND, EITHER EXPRESSED OR IMPLIED. INCLUDING, BUT NOT LIMITED TO, THE IMPLIED WARRANTIES OF MERPCHANTABILITY AND FITNESS FOR A PARTICULAR PURPOSE. THE ENTIRE RISK AS TO THE QUALITY AND PERFORMANCE OF THE PROGRAM IS WITH YOU. SHOULD THE PROGRAMPROVE DEFECTIVE, YOU ASSUME THE COST OF ALL NECESSARY SERVICING, REPAIR OR CORRECTION.

12. IN NO EVENT UNLESS REQUIRED BY APPLICABLE LAW OR AGREED TO IN WRITING WILL ANY COPYRIGHT HOLDER, OR ANY OTHER PARTY WHO MAY MODIFY AND/OR REDISTRIBUTE DAMAGES, INCLUDING ANY GENERAL, SPECIAL, INCIDENTAL OR CONSEQUENTIAL DAMAGES ARISING OUT OF THE USE OR INABILITY TO USE THE PROGRAM (INCLUDING BUT NOT LIMITED TO LOSS OF DATA OR DATA BEING RENDERED INACCURATE OR LOSSES SUSTAINED BY YOU OR THIRD PARTIES OR A FAILURE OF THE PROGRAM TO OPERATE WITH ANY OTHER PROGRAMS), EVEN IF SUCH HOLDER OR OTHER PARTY HAS BEEN ADVISED OF THE POSSIBILITY OF SUCH DAMAGES.

END OF TERMS AND CONDITIONS

How to Apply These Terms to Your New Programs If you develop a new program, and you want it to be of the greatest possible use to the public, the best way to achieve this is to make it free software which everyone can redistribute and change under these terms. To do so, attach the following notices to the program. It is safest to attach them to the start of each source file to most effectively convey the exclusion of warranty ; and each file should have at least the "copyright" line and a pointer to where the full notice is found.one line to give the program's name and an idea of what it does.

Copyright (C)yyyy name of author

This program is free software ; you can redistribute it and/or modify it under the terms of the GNU General Public License as published by the Free Software Foundation : either version 2 of the License, or (at your option)any later version.

This program is distributed in the hope that it will be useful. but WITHOUT ANY WARRANTY ; without even the implied warranty of MERCHANTABILITY or FITNESS FOR A PARTICULAR PURPOSE. See the GNU General Public License for more details.

You should have received a copy of the GNU General Public License along with this program ; if not, write to the Free Software Foundation, Inc.,51 Franklin Street, Fifth Floor, Boston, MA 02110-1301, USA.
Also add information on how to contact you by electronic and paper mail. If the program is interactive, make it output a short notice like this when it starts in an interactive mode :

Gnomovision version 69, Copyright (C) year name of author Gnomovision comes with ABSOLUTELY NO WARRANTY ; for details type 'show w'. This is free software, and you are welcome to redistribute it under certain conditions ; type 'show c' for details.

The hypothetical commands 'show w' and 'show c' should show the appropriate parts of the General Public License. Of course, the commands you use may be called something other than 'show w' and 'show c' : they could even be mouse-clicks or menu items-- whatever suits your program.

You should also get your employer (if you work as a programmer)or your school, if any, to sign a "copyright disclaimer" for the program,if necessary. Here is a sample ; alter the names:

Yoyodyne, Inc.,hereby disclaims all copyright interest in the program 'Gnomovision' (which makes passes at compilers) written by James Hacker. signature of Ty Coon. 1 April 1989 Ty Coon, President of Vice This General Public License does not permit incorporating your program into proprietary programs. If your program is a subroutine library. you may consider it more useful to permit linking proprietary applications with the library. If this is Lwihcaetn ysoeu want to do, use the GNU Lesser General Public instead of this License.

GNU GENERAL PUBLIC LICENSE

Version 3, 29 June 2007

Copyright (C) 2007 Free Software Foundation, Inc. <http://fsf.org/>

Everyone is permitted to copy and distribute verbatim copies of this license document, but changing it is not allowed.

Preamble

The GNU General Public License is a free, copyleft license for software and other kinds of works. The licenses for most software and other practical works are designed to take away your freedom to share and change the works. By contrast, the GNU General Public License is intended to guarantee your freedom to share and change all versions of a program-- to make sure it remains free software for all its users.

We, the Free Software Foundation, use the GNU General Public License for most of our software; it applies also to any other work released this way by its authors.

You can apply it to your programs, too. When we speak of free software, we are referring to freedom, not price. Our General Public Licenses are designed to make sure that you have the freedom to distribute copies of free software (and charge for them if you wish), that you receive source code or can get it if you want it. that you can change the software or use pieces of it in new free programs, and that you know you can do these things.

To protect your rights, we need to prevent others from denying you these rights or asking you to surrender the rights. Therefore, you have certain responsibilities if you distribute copies of the software, or if you modify it: responsibilities to respect the freedom of others. For example, if you distribute copies of such a program, whether gratis or for a fee, you must pass on to the recipients the same freedoms that you received. You must make sure that they, too, receive or can get the source code. And you must show them these terms so they know their rights. Developers that use the GNU GPL protect your rights with two steps: (1) assert copyright on the software, and (2) offer you this License giving you legal permission to copy, distribute and/or modify it. For the developers' and authors' protection, the GPL clearly explains that there is no arranty for this free software. For both users' and authors' sake, the GPL requires that modified versions be marked as changed. so that their problems will not be attributed erroneously to authors of previous versions. Some devices are designed to deny users access to install or run modified versions of the software inside them, although the manufacturer can do so. This is fundamentally incompatible with the aim of protecting users' freedom to change the software. The systematic pattern of such abuse occurs in the area of products for individuals to use, which is precisely where it is most unacceptable. Therefore, we have designed this version of the GPL to prohibit the practice for those products. If such problems arise substantially in other domains, we stand ready to extend this provision to those domains in future versions of the GPL, as needed to protect the freedom of users.

Finally, every program is threatened constantly by software patents. States should not allow patents to restrict development and use of software on general-purpose ornputers, but in those that do, we wish to avoid the special anger that patents applied to a free program could make it ffectively proprietary. To prevent this, the GPL assures that atents cannot be used to render the program non-free. he precise terms and conditions for copying. distribution and modification follow.

TERMS AND CONDITIONS

0. Definitions.

"This License" refers to version 3 of the GNU General Public License.
Copyright' also means copyright-like laws that apply to other kinds of works. such as semiconductor masks. "The Program" refers to any copyrightable work licensed under this License. Each licensee is addressed as "you". "Licensees" and "recipients' may be individuals or organizations.

To "modify" a work means to copy from or adapt all or part of the work in a fashion requiring copyright permission, other than the making of an exact copy. The resulting work is called a "modified version" of the earlier work or a work "based on" the earlier work.

A "covered work" means either the unmodified Program or a work based on the Program.

To "propagate" a work means to do anything with it that, without permission, would make you directly or secondarily liable for infringement under applicable copyright law, except executing it on a computer or modifying a private copy.

Propagation includes copying. distribution (with or without modification), making available to the public, and in some countries other activities as well.

To "convey" a work means any kind of propagation that enables other parties to make or receive copies. Mere interaction with a user through a computer network. with no transfer of a copy, is not conveying. An interactive user interface displays "Appropriate Legal Notices" to the extent that it includes a convenient and prominently visible feature that (1) displays an appropriate copyright notice, and (2) tells the user that there is no warranty for the work (except to the extent that warranties are provided), that licensees may convey the work under this License. and how to view a copy of this License. If the interface presents a list of user commands or options, such as a menu. a prominent item in the list meets this criterion.

1. Source Code.

The "source code" for a work means the preferred form of the work for making modifications to it. "Object code" means any non-source form of a work.

A "Standard Interface" means an interface that either is an official standard defined by a recognized standards body, or. in the case of interfaces specified for a particular programming language, one that is widely used among developers working in that language.

The "System Libraries" of an executable work include anything, other than the work as a whole, that (a) is included in the normal form of packaging a Major Component, but which is not part of that Major Component, and (b) serves only to enable use of the work with that Major Component, or to implement a Standard Interface for which an implementation is available to the public in source code form. A "Major Component". in this context, means a major essential component (kernel, window system. and so on) of the specific operating system (if any) on which the executable work runs, or a compiler used to produce the work, or an object code interpreter used to run it.

The "Corresponding Source" for a work in object code form means all the source code needed to generate, install, and (for an executable work) run the object code and to modify the work, including scripts to control those activities.

However, it does not include the work's System Libraries, or generalpurpose tools or generally available free programs which are used unmodified in performing those activities but which are not part of the work. For example. Corresponding Source includes interface definition files associated with source files for the work, and the source code for shared libraries and dynamically linked subprograms that the work is specifically designed to require. such as by intimate data communication or control flow between those subprograms and other parts of the work.

The Corresponding Source need not include anything that users can regenerate automatically from other parts of the Corresponding Source. The Corresponding Source for a work in source code form is that same work.

2. Basic Permissions.

All rights granted under this License are granted for the term of copyright on the Program, and are irrevocable provided the stated conditions are met. This License explicitly affirms your unlimited permission to run the unmodified Program. The output from running a covered work is covered by this License only if the output, given its content, constitutes a covered work. This License acknowledges your rights of fair use or other equivalent, as provided by copyright law.

You may make, run and propagate covered works that you do not convey, without conditions so long as your license otherwise remains in force. You may convey covered works to others for the sole purpose of having them make modifications exclusively for you, or provide you with facilities for running those works, provided that you comply with the terms of this License in conveying all material for which you do not control copyright. Those thus making or running the covered works for you must do so exclusively on your behalf, under your direction and control, on terms that prohibit them from making any copies of your copyrighted material outside their relationship with you. Conveying under any other circumstances is permitted solely under the conditions stated below. Sublicensing is not allowed; section 10 makes it unnecessary.

3. Protecting Users' Legal Rights From anti-Circumvention Law.

No covered work shall be deemed part of an effective technological measure under any applicable law fulfilling obligations under article 11 of the WIPO copyright treaty adopted on 20 December 1996, or similar laws prohibiting or restricting circumvention of such measures.

When you convey a covered work, you waive any legal power to forbid circumvention of technological measures to the extent such circumvention is effected by exercising rights under this License with respect to the covered work, and you disclaim any intention to limit operation or modification of the work as a means of enforcing, against the work's users, your or third parties' legal rights to forbid circumvention of technological measures.

4. Conveying Verbatim Copies.

You may convey verbatim copies of the Program's source code as you receive it, in any medium, provided that you conspicuously and appropriately publish on each copy an appropriate copyright notice; keep intact all notices stating that this License and any non-permissive terms added in accord with section 7 apply to the code; keep intact all notices of the absence of any warranty; and give all recipients a copy of this License along with the Program. You may charge any price or no price for each copy that you convey, and you may offer support or warranty protection for a fee.

5. Conveying Modified Source Versions.

You may convey a work based on the Program, or the modifications to produce it from the Program, in the form of source code under the terms of section 4, provided that you also meet all of these conditions:

a) The work must carry prominent notices stating that you modified it, and giving a relevant date.

b) The work must carry prominent notices stating that it is released under this License and any conditions added under section 7. This requirement modifies the requirement in section 4 to "keep intact all notices".

c) You must license the entire work, as a whole, under this License to anyone who comes into possession of a copy. This License will therefore apply, along with any applicable section 7 additional terms, to the whole of the work, and all its parts, regardless of how they are packaged. This License gives no permission to license the work in any other way, but it does not invalidate such permission if you have separately received it.

d) If the work has interactive user interfaces, each must display Appropriate Legal Notices; however, if the Program has interactive interfaces that do not display Appropriate Legal Notices, your work need not make them do so. A compilation of a covered work with other separate and independent works, which are not by their nature extensions of the covered work, and which are not combined with it such as to form a larger program, in or on a volume of a storage or distribution medium, is called an "aggregate" if the compilation and its resulting copyright are not used to limit the access or legal rights of the compilation's users beyond what the individual works permit. Inclusion of a covered work in an aggregate does not cause this License to apply to the other parts of the aggregate.

6. Conveying Non-Source Forms.

You may convey a covered work in object code form under the terms of sections 4 and 5, provided that you also convey the machine-readable Corresponding Source under the terms of this License, in one of these ways:

a) Convey the object code in, or embodied in, a physical product (including a physical distribution medium), accompanied by the Corresponding Source fixed on a durable physical medium customarily used for software interchange.

b) Convey the object code in, or embodied in, a physical product (including a physical distribution medium), accompanied by a written offer, valid for at least three years and valid for as long as you offer spare parts or customer support for that product model, to give anyone who possesses the object code either (1) a copy of the Corresponding Source for all the software in the product that is covered by this License, on a durable physical medium customarily used for software interchange, for a price no more than your reasonable cost of physically performing this conveying of source, or (2) access to copy the Corresponding Source from a network server at no charge.

c) Convey individual copies of the object code with a copy of the written offer to provide the corresponding Source. This alternative is allowed only occasionally and noncommercially, and only if you received the object code with such an offer, in accord with subsection 6b.

d) Convey the object code by offering access from a designated place (gratis or for a charge), and offer equivalent access to the Corresponding Source in the same way through the same place at no further charge. You need not require recipients to copy the Corresponding Source along with the object code. If the place to copy the object code is a network server, the Corresponding Source may be on a different server (operated by you or a third party) that supports equivalent copying facilities, provided you maintain clear directions next to the object code saying where to find the Corresponding Source. Regardless of what server hosts the Corresponding Source, you remain obligated to ensure that it is available for as long as needed to satisfy these requirements.

e) Convey the object code using peer-to-peer transmission, provided you inform other peers where the object code and Corresponding Source of the work are being offered to the general public at no charge under subsection 6d. A separable portion of the object code, whose source code is excluded from the Corresponding Source as a System Library, need not be included in conveying the object code work. A "User Product" is either (1) a "consumer product", which means any tangible personal property which is normally used for personal, family, or household purposes, or (2) anything designed or sold for incorporation into a dwelling. In determining whether a product is a consumer product, doubtful cases shall be resolved in favor of coverage. For a particular product received by a particular user, "normally used" refers to a typical or common use of that class of product, regardless of the status of the particular user or of the way in which the particular user actually uses, or expects or is expected to use, the product. A product is a consumer product regardless of whether the product has substantial commercial, industrial or non-consumer uses, unless such uses represent the only significant mode of use of the product.

"Installation Information" for a User Product means any methods, procedures, authorization keys, or other information required to install and execute modified versions of a covered work in that User Product from a modified version of its Corresponding Source. The information must suffice to ensure that the continued functioning of the modified object code is in no case prevented or interfered with solely because modification has been made. If you convey an object code work under this section in, or with, or specifically for use in, a User Product, and the conveying occurs as part of a transaction in which the right of possession and use of the User Product is transferred to the recipient in perpetuity or for a fixed term (regardless of how the transaction is characterized), the Corresponding Source conveyed under this section must be accompanied by the Installation Information. But this requirement does not apply if neither you nor any third party retains the ability to install modified object code on the User Product (for example, the work has been installed in ROM).

The requirement to provide Installation Information does not include a requirement to continue to provide support service, warranty, or updates for a work that has been modified or installed by the recipient, or for the User Product in which it has been modified or installed. Access to a network may be denied when the modification itself materially and adversely affects the operation of the network or violates the rules and protocols for communication across the network. Corresponding Source conveyed, and Installation Information provided, in accord with this section must be in a format that is publicly documented (and with an implementation available to the public in source code form), and must require no special password or key for unpacking, reading or copying.

7. Additional Terms.

"Additional permissions" are terms that supplement the terms of this License by making exceptions from one or more of its conditions. Additional permissions that are applicable to the entire Program shall be treated as though they were included in this License, to the extent that they are valid under applicable law. If additional permissions apply only to part of the Program, that part may be used separately under those permissions, but the entire Program remains governed by this License without regard to the additional permissions. When you convey a copy of a covered work, you may at your option remove any additional permissions from that copy, or from any part of it. (Additional permissions may be written to require their own removal in certain cases when you modify the work.) You may place additional permissions on material, added by you to a covered work, for which you have or can give appropriate copyright permission. Notwithstanding any other provision of this License, for material you add to a covered work, you may (if authorized by the copyright holders of that material) supplement the terms of this License with terms:

a) Disclaiming warranty or limiting liability differently from the terms of sections 15 and 16 of this License; or

b) Requiring preservation of specified reasonable legal notices or author attributions in that material or in the Appropriate Legal Notices displayed by works containing it; or

c) Prohibiting misrepresentation of the origin of that material, or requiring that modified versions of such material be marked in reasonable ways as different from the original version; or

d) Limiting the use for publicity purposes of names of licensors or authors of the material; or

e) Declining to grant rights under trademark law for use of some trade names, trademarks, or service marks; or

f) Requiring indemnification of licensors and authors of that material by anyone who conveys the material (or modified versions of it) with contractual assumptions of liability to the recipient, for any liability that these contractual assumptions directly impose on those licensors and authors. All other non-permissive additional terms are considered "further restrictions" within the meaning of section 10. If the Program as you received it, or any part of it, contains a notice stating that it is governed by this License along with a term that is a further restriction, you may remove that term. If a license document contains a further restriction but permits relicensing or conveying under this License, you may add to a covered work material governed by the terms of that license document, provided that the further restriction does not survive such relicensing or conveying. If you add terms to a covered work in accord with this section, you must place, in the relevant source files, a statement of the additional terms that apply to those files, or a notice indicating where to find the applicable terms. Additional terms, permissive or non-permissive, may be stated in the form of a separately written license, or stated as exceptions; the above requirements apply either way.

8. Termination.

You may not propagate or modify a covered work except as expressly provided under this License. Any attempt otherwise to propagate or modify it is void, and will automatically terminate your rights under this License (including any patent licenses granted under the third paragraph of section 11).

However, if you cease all violation of this License, then your license from a particular copyright holder is reinstated (a) provisionally, unless and until the copyright holder explicitly and finally terminates your license, and (b) permanently, if the copyright holder fails to notify you of the violation by some reasonable means prior to 60 days after the cessation. Moreover, your license from a particular copyright holder is reinstated permanently if the copyright holder notifies you of the violation by some reasonable means, this is the first time you have received notice of violation of this License (for any work) from that copyright holder, and you cure the violation prior to 30 days after your receipt of the notice. Termination of your rights under this section does not terminate the licenses of parties who have received copies or rights from you under this License. If your rights have been terminated and not permanently reinstated, you do not qualify to receive new licenses for the same material under section 10.

9. Acceptance Not Required for Having Copies.

You are not required to accept this License in order to receive or run a copy of the Program. Ancillary propagation of a covered work occurring solely as a consequence of using peer-to-peer transmission to receive a copy likewise does not require acceptance. However, nothing other than this License grants you permission to propagate or modify any covered work. These actions infringe copyright if you do not accept this License. Therefore, by modifying or propagating a covered work, you indicate your acceptance of this License to do so.

10. Automatic Licensing of Downstream Recipients.

Each time you convey a covered work, the recipient automatically receives a license from the original licensors, to run, modify and propagate that work, subject to this License. You are not responsible for enforcing compliance by third parties with this License. An "entity transaction" is a transaction transferring control of an organization, or substantially all assets of one, or subdividing an organization, or merging organizations. If propagation of a covered work results from an entity transaction, each party to that transaction who receives a copy of the work also receives whatever licenses to the work the party's predecessor in interest had or could give under the previous paragraph, plus a right to possession of the Corresponding Source of the work from the predecessor in interest, if the predecessor has it or can get it with reasonable efforts. You may not impose any further restrictions on the exercise of the rights granted or affirmed under this License. For example, you may not impose a license fee, royalty, or other charge for exercise of rights granted under this License, and you may not initiate litigation (including a cross-claim or counterclaim in a lawsuit) alleging that any patent claim is infringed by making, using, selling, offering for sale, or importing the Program or any portion of it.

11. Patents.

A "contributor" is a copyright holder who authorizes use under this License of the Program or a work on which the Program is based. The work thus licensed is called the contributor's "contributor version". A contributor's "essential patent claims" are all patent claims owned or controlled by the contributor, whether already acquired or hereafter acquired, that would be infringed by some manner, permitted by this License, of making, using, or selling its contributor version, but do not include claims that would be infringed only as a consequence of further modification of the contributor version. For purposes of this definition, "control" includes the right to grant patent sublicenses in a manner consistent with the requirements of this License. Each contributor grants you a non-exclusive, worldwide, royalty-free patent license under the contributor's essential patent claims, to make, use, sell, offer for sale, import and otherwise run, modify and propagate the contents of its contributor version.

In the following three paragraphs, a "patent license" is any express agreement or commitment, however denominated, not to enforce a patent (such as an express permission to practice a patent or covenant not to sue for patent infringement). To "grant" such a patent license to a party means to make such an agreement or commitment not to enforce a patent against the party. If you convey a covered work, knowingly relying on a patent license, and the Corresponding Source of the work is not available for anyone to copy, free of charge and under the terms of this License, through a publicly available network server or other readily accessible means, then you must either (1) cause the Corresponding Source to be so available, or (2) arrange to deprive yourself of the benefit of the patent license for this particular work, or (3) arrange, in a manner consistent with the requirements of this License, to extend the patent license to downstream recipients. "Knowingly relying" means you have actual knowledge that, but for the patent license, your conveying the covered work in a country, or your recipient's use of the covered work in a country, would infringe one or more identifiable patents in that country that you have reason to believe are valid. If, pursuant to or in connection with a single transaction or arrangement, you convey, or propagate by procuring conveyance of, a covered work, and grant a

patent license to some of the parties receiving the covered work authorizing them to use, propagate, modify or convey a specific copy of the covered work, then the patent license you grant is automatically extended to all recipients of the covered work and works based on it. A patent license is "discriminatory" if it does not include within the scope of its coverage, prohibits the exercise of, or is conditioned on the non-exercise of one or more of the rights that are specifically granted under this License. You may not convey a covered work if you are a party to an arrangement with a third party that is in the business of distributing software, under which you make payment to the third party based on the extent of your activity of conveying the work, and under which the third party grants, to any of the parties who would receive the covered work from you, a discriminatory patent license

(a) in connection with copies of the covered work conveyedby you (or copies made from those copies), or

(b) primarily for and in connection with specific products or compilations that contain the covered work, unless you entered into that arrangement, or that patent license was granted, prior to 28 March 2007. Nothing in this License shall be construed as excluding or limiting any implied license or other defenses to infringement that may otherwise be available to you under applicable patent law.

12. No Surrender of Others' Freedom.

If conditions are imposed on you (whether by court order, agreement or otherwise) that contradict the conditions of this License, they do not excuse you from the conditions of thisLicense. If you cannot convey a covered work so as to satisfy simultaneously your obligations under this License and any other pertinent obligations, then as a consequence you may not convey it at all. For example, if you agree to terms that obligate you to collect a royalty for further conveying from those to whom you convey the Program, the only way you could satisfy both those terms and this License would be to refrain entirely from conveying the Program.

13. Use with the GNU Affero General Public License.

Notwithstanding any other provision of this License, you have permission to link or combine any covered work with a work licensed under version 3 of the GNU Affero General Public License into a single combined work, and to convey the resulting work. The terms of this License will continue to apply to the part which is the covered work, but the special requirements of the GNU Affero General Public License, section 13, concerning interaction through a network will apply to the combination as such.

14. Revised Versions of this License.

The Free Software Foundation may publish revised and/ or new versions of the GNU General Public License from time to time. Such new versions will be similar in spirit to the present version, but may differ in detail to address new problems or concerns.

Each version is given a distinguishing version number. If the Program specifies that a certain numbered version of the GNU General Public License "or any later version" applies to it, you have the option of following the terms and conditions either of that numbered version or of any later version published by the Free Software Foundation. If the Program does not specify a version number of the GNU General Public License, you may choose any version ever published by the Free Software Foundation. If the Program specifies that a proxy can decide which future versions of the GNU General Public License can be used, that proxy's public statement of acceptance of a version permanently authorizes you to choose that version for the Program. Later license versions may give you additional or different permissions. However, no additional obligations are imposed on any author or copyright holder as a result of your choosing to follow a later version.

15. Disclaimer of Warranty.

THERE IS NO WARRANTY FOR THE PROGRAM, TO THE EXTENT PERMITTED BY APPLICABLE LAW. EXCEPT WHEN OTHERWISE STATED IN WRITING THE COPYRIGHT HOLDERS AND/OR OTHER PARTIES PROVIDE THE PROGRAM "AS IS" WITHOUT WARRANTY OF ANY KIND, EITHER EXPRESSED OR IMPLIED, INCLUDING, BUT NOT LIMITED TO, THE IMPLIED WARRANTIES OF MERCHANTABILITY AND FITNESS FOR A PARTICULAR PURPOSE. THE ENTIRE RISK AS TO THE QUALITY AND PERFORMANCE OF THE PROGRAM IS WITH YOU. SHOULD THE PROGRAM PROVE DEFECTIVE, YOU ASSUME THE COST OF ALL NECESSARY SERVICING, REPAIR OR CORRECTION.

16. Limitation of Liability.

IN NO EVENT UNLESS REQUIRED BY APPLICABLE LAW OR AGREED TO IN WRITING WILL ANY COPYRIGHT HOLDER, OR ANY OTHER PARTY WHO MODIFIES AND/OR CONVEYS THE PROGRAM AS PERMITTED ABOVE, BE LIABLE TO YOU FOR DAMAGES, INCLUDING ANY GENERAL, SPECIAL, INCIDENTAL OR CONSEQUENTIAL DAMAGES ARISING OUT OF THE USE OR INABILITY TO USE THE PROGRAM (INCLUDING BUT NOT LIMITED TO LOSS OF DATA OR DATA BEING RENDERED INACCURATE OR LOSSES SUSTAINED BY YOU OR THIRD PARTIES OR A FAILURE OF THE PROGRAM TO OPERATE WITH ANY OTHER PROGRAMS), EVEN IF SUCH HOLDER OR OTHER PARTY HAS BEEN ADVISED OF THE POSSIBILITY OF SUCH DAMAGES.

17. Interpretation of Sections 15 and 16.

If the disclaimer of warranty and limitation of liability provided above cannot be given local legal effect according to their terms, reviewing courts shall apply local law that most closely approximates an absolute waiver of all civil liability in connection with the Program, unless a warranty or assumption of liability accompanies a copy of the Program in return for a fee.

OpenSSL Combined License

The OpenSSL toolkit stays under a dual license, i.e. both the conditions of the OpenSSL License and the original SSLeay license apply to the toolkit.

See below for the actual license texts. Actually both licenses are BSD-style Open Source licenses. In case of any license issues related to OpenSSL please contact openssl-core@openssl.org.

Component Name	License	URL
openssl-1.0.2e	OpenSSL	Combined License http://www.openssl.org/source

Copyright (c) 1998-2011 The OpenSSL Project. All rights reserved.

Redistribution and use in source and binary forms, with or without modification, are permitted provided that the following conditions are met:

1. Redistributions of source code must retain the above copyright notice, this list of conditions and the following disclaimer.

2. Redistributions in binary form must reproduce the above copyright notice, this list of conditions and the following disclaimer in the documentation and/or other materials provided with the distribution.

3. All advertising materials mentioning features or use of this software must display the following acknowledgment: "This product includes software developed by the OpenSSL Projectfor use in the OpenSSL Toolkit. (http://www.openssl.org/)"

4. The names "OpenSSL Toolkit" and "OpenSSL Project" must not be used to endorse or promote products derived from this software without prior written permission. For written permission, please contact openssl-core@openssl.org.

5. Products derived from this software may not be called "OpenSSL" nor may "OpenSSL" appear in their names without prior written permission of the OpenSSL Project.

6. Redistributions of any form whatsoever must retain the following acknowledgment: "This product includes software developed by the OpenSSL Project for use in the OpenSSL Toolkit (http://www.openssl.org/)"

THIS SOFTWARE IS PROVIDED BY THE OpenSSL PROJECT "AS IS" AND ANY EXPRESSED OR IMPLIED WARRANTIES, INCLUDING, BUT NOT LIMITED TO, THE IMPLIED WARRANTIES OF MERCHANTABILITY AND FITNESS FOR A PARTICULAR PURPOSE ARE DISCLAIMED. IN NO EVENT SHALL THE OpenSSL PROJECT OR ITS CONTRIBUTORS BE LIABLE FOR ANY DIRECT, INDIRECT, INCIDENTAL, SPECIAL, EXEMPLARY, OR CONSEQUENTIAL DAMAGES (INCLUDING, BUT NOT LIMITED TO, PROCUREMENT OF SUBSTITUTE GOODS OR SERVICES; LOSS OF USE, DATA, OR PROFITS; OR BUSINESS INTERRUPTION) HOWEVER CAUSED AND ON ANY THEORY OF LIABILITY, WHETHER IN CONTRACT, STRICT LIABILITY, OR TORT (INCLUDING NEGLIGENCE OR OTHERWISE) ARISING IN ANY WAY OUT OF THE USE OF THIS SOFTWARE, EVEN IF ADVISED OF THE POSSIBILITY OF SUCH DAMAGE.

This product includes cryptographic software written by Eric Young(eay@cryptsoft.com). This product includes software written by Tim Hudson (tjh@cryptsoft.com).

Original SSLeay License

Copyright (C) 1995-1998 Eric Young (eay@cryptsoft.com) All rights reserved.

This package is an SSL implementation written by Eric Young (eay@cryptsoft.com).

The implementation was written so as to conform with Netscapes SSL.

This library is free for commercial and non-commercial use as long as the following conditions are aheared to. The following conditions apply to all code found in this distribution, be it the RC4, RSA, lhash, DES, etc., code; not just the SSL code. The SSL documentation included with this distribution is covered by the same copyright terms except that the holder is Tim Hudson (tjh@cryptsoft.com).

Copyright remains Eric Young's, and as such any Copyright notices in the code are not to be removed. If this package is used in a product, Eric Young should be given attribution as the author of the parts of the library used. This can be in the form of a textual message at program startup or in documentation (online or textual) provided with the package. Redistribution and use in source and binary forms, with or without modification, are permitted provided that the following conditions are met:

1. Redistributions of source code must retain the copyright notice, this list of conditions and the following disclaimer.

2. Redistributions in binary form must reproduce the above copyright notice, this list of conditions and the following disclaimer in the documentation and/or other materials provided with the distribution.

3. All advertising materials mentioning features or use of this software must display the following acknowledgement: "This product includes cryptographic software written by Eric Young (eay@cryptsoft.com)" The word 'cryptographic' can be left out if the routines from the library being used are not cryptographic related :-).

4. If you include any Windows specific code (or a derivative thereof) from the apps directory (application code) you must include an acknowledgement: "This product includes software written by Tim Hudson (tjh@cryptsoft. com)"

THIS SOFTWARE IS PROVIDED BY ERIC YOUNG "AS IS" AND ANY EXPRESS OR IMPLIED WARRANTIES, INCLUDING, BUT NOT LIMITED TO, THE IMPLIED WARRANTIES OF MERCHANTABILITY AND FITNESS FOR A PARTICULAR PURPOSE ARE DISCLAIMED. IN NO EVENT SHALL THE AUTHOR OR CONTRIBUTORS BE LIABLE FOR ANY DIRECT, INDIRECT, INCIDENTAL, SPECIAL, EXEMPLARY, OR CONSEQUENTIAL DAMAGES (INCLUDING, BUT NOT LIMITED TO, PROCUREMENT OF SUBSTITUTE GOODS OR SERVICES; LOSS OF USE, DATA, OR PROFITS; OR BUSINESS INTERRUPTION) HOWEVER CAUSED AND ON ANY THEORY OF LIABILITY, WHETHER IN CONTRACT, STRICT LIABILITY, OR TORT (INCLUDING NEGLIGENCE OR OTHERWISE) ARISING IN ANY WAY OUT OF THE USE OF THIS SOFTWARE, EVEN IF ADVISED OF THE POSSIBILITY OF SUCH DAMAGE.

The licence and distribution terms for any publically available version or derivative of this code cannot be changed. i.e. this code cannot simply be copied and put under another distribution licence [including the GNU Public Licence.]

BSD License

Some software components of this product incorporate source code covered under the BSD license as follows.

Component Name	License	URL
net-snmp-5.7.3	BSD	http://www.net-snmp.org/about/license.html
pcre-5.38	BSD	
libcap-1.7.4	BSD 2.0	http://www.kernel.org/pub/linux/libs/security/linux-privs/libcap2
lighttpd-1.4.35	BSD 2.0	http://www.opensource.org/licenses/bsd-license.html
MiniUPnP Project Client	BSD 2.0	
pppd-2.4.7	BSD 2.0	http://opensource.org/licenses/BSD-3-Clause

lighttpd is a secure, fast, compliant, and very flexible webserver that has been optimized for high-performance environments. It has a very low memory footprint compared to other webservers and takes care of cpuload. Its advanced feature-set (FastCGI, CGI, Auth, Output-Compression, URL-Rewriting and many more) make lighttpd the perfect webserver-software for every server that suffers load problems. Simple Network Management Protocol (SNMP) is an Internetstandard protocol for managing devices on IP networks. It is used mostly in network management systems to monitor the devices attached to the network for conditions that need administrative attention. Net-SNMP is a suite of applications used to implement SNMP v1, SNMP v2c and SNMP v3 using both IPv4 and IPv6. For more additional information, send email to help.cctv@hanwha.com.

Copyright (C) 2004. Kneschke, incremental

All rights reserved.

Redistribution and use in source and binary forms, with or without modification, are permitted provided that the following conditions are met :

- Redistributions of source code must retain the above copyright notice, this list of conditions and the following disclaimer.
- Redistributions in binary form must reproduce the above copyright notice, this list of conditions and the following disclaimer in the documentation and/or other materials provided with the distribution.
- Neither the name of the 'incremental' nor the names of its contributors may be used to endorse or promote products derived from this software without specific prior written permission.

THIS SOFTWARE IS PROVIDED BY THE COPYRIGHT HOLDERS AND CONTRIBUTORS "AS IS" AND ANY EXPRESS OR IMPLIED WARRANTIES, INCLUDING, BUT NOT LIMITED TO, THE IMPLIED WARRANTIES OF MERCHANTABILITY AND FITNESS FOR A PARTICULAR PURPOSE ARE DISCLAIMED. IN NO EVENT SHALL THE COPYRIGHT OWNER OR CONTRIBUTORS BE LIABLE FOR ANY DIRECT, INDIRECT, INCIDENTAL, SPECIAL, EXEMPLARY, OR CONSEQUENTIAL DAMAGES (INCLUDING, BUT NOT LIMITED TO, PROCUREMENT OF SUBSTITUTE GOODS OR SERVICES; LOSS OF USE, DATA, OR PROFITS; OR BUSINESS INTERRUPTION) HOWEVER CAUSED AND ON ANY THEORY OF LIABILITY, WHETHER IN CONTRACT, STRICT LIABILITY, OR TORT (INCLUDING NEGLIGENCE OR OTHERWISE) ARISING IN ANY WAY OUT OF THE USE OF THIS SOFTWARE, EVEN IF ADVISED OF THE POSSIBILITY OF SUCH DAMAGE.

Copyright (c) 1998-2001 University College London

All rights reserved.

Redistribution and use in source and binary forms, with or without modification, is permitted provided that the following conditions are met :

1. Redistributions of source code must retain the above copyright notice, this list of conditions and the following disclaimer.
2. Redistributions in binary form must reproduce the above copyright notice, this list of conditions and the following disclaimer in the documentation and/or other materials provided with the distribution.
3. All advertising materials mentioning features or use of this software must display the following acknowledgement: This product includes software developed by the Computer Science Department at University College London.
4. Neither the name of the University nor of the Department may be used to endorse or promote products derived from this software without specific prior written permission.

THIS SOFTWARE IS PROVIDED BY THE AUTHORS AND CONTRIBUTORS "AS IS" AND ANY EXPRESSED OR IMPLIED WARRANTIES, INCLUDING, BUT NOT LIMITED TO, THE IMPLIED WARRANTIES OF MERCHANTABILITY AND FITNESS FOR A PARTICULAR PURPOSEARE DISCLAIMED. IN NO EVENT SHALL THE AUTHORS OR CONTRIBUTORS BE LIABLE FOR ANY DIRECT, INDIRECT, INCIDENTAL, SPECIAL, EXEMPLARY, OR CONSEQUENTIAL DAMAGES (INCLUDING, BUT NOT LIMITED TO, PROCUREMENT OF SUBSTITUTE GOODS OR SERVICES; LOSS OF USE, DATA, OR PROFITS; OR BUSINESS INTERRUPTION) HOWEVER CAUSED AND ON ANY THEORY OF LIABILITY, WHETHER IN CONTRACT, STRICT LIABILITY, OR TORT (INCLUDING NEGLIGENCE OR OTHERWISE) ARISING IN ANY WAY OUT OF THE USE OF THIS SOFTWARE, EVEN IF ADVISED OF THE POSSIBILITY OF SUCH DAMAGE.

Copyright (c) 1988, 1989, 1990, 1991, 1993, 1994, 1995, 1996 The Regents of the University of California.

All rights reserved.

Redistribution and use in source and binary forms, with or without modification, are permitted provided that the following conditions are met:

1. Redistributions of source code must retain the above copyright notice, this list of conditions and the following disclaimer.
2. Redistributions in binary form must reproduce the above copyright notice, this list of conditions and the following disclaimer in the documentation and/or other materials provided with the distribution.
3. Neither the name of the Regents of the University of California nor the names of its contributors may be used to endorse or promote products derived from this software without specific prior written permission.

THIS SOFTWARE IS PROVIDED BY THE COPYRIGHT HOLDERS AND CONTRIBUTORS "AS IS" AND ANY EXPRESS OR IMPLIED WARRANTIES, INCLUDING, BUT NOT LIMITED TO, THE IMPLIED WARRANTIES OF MERCHANTABILITY AND FITNESS FOR A PARTICULAR PURPOSE ARE DISCLAIMED. IN NO EVENT SHALL THE COPYRIGHT OWNER OR CONTRIBUTORS BE LIABLE FOR ANY DIRECT, INDIRECT, INCIDENTAL, SPECIAL, EXEMPLARY, OR CONSEQUENTIAL DAMAGES (INCLUDING, BUT NOT LIMITED TO, PROCUREMENT OF SUBSTITUTE GOODS OR SERVICES; LOSS OF USE, DATA, OR PROFITS; OR BUSINESS INTERRUPTION) HOWEVER CAUSED AND ON ANY THEORY OF LIABILITY, WHETHER IN CONTRACT, STRICT LIABILITY, OR TORT (INCLUDING NEGLIGENCE OR OTHERWISE) ARISING IN ANY WAY OUT OF THE USE OF THIS SOFTWARE, EVEN IF ADVISED OF THE POSSIBILITY OF SUCH DAMAGE.

Copyright (c) 2006, Creative Labs Inc

All rights reserved.

Redistribution and use in source and binary forms, with or without modification, are permitted provided that the following conditions are met:

1. Redistributions of source code must retain the above copyright notice, this list of conditions and the following disclaimer.
2. Redistributions in binary form must reproduce the above copyright notice, this list of conditions and the following disclaimer in the documentation and/or other materials provided with the distribution.
3. Neither the name of the Creative Labs nor the names of its contributors may be used to endorse or promote products derived from this software without specific prior written permission.

THIS SOFTWARE IS PROVIDED BY THE COPYRIGHT HOLDERS AND CONTRIBUTORS "AS IS" AND ANY EXPRESS OR IMPLIED WARRANTIES, INCLUDING, BUT NOT LIMITED TO, THE IMPLIED WARRANTIES OF MERCHANTABILITY AND FITNESS FOR A PARTICULAR PURPOSE ARE DISCLAIMED. IN NO EVENT SHALL THE COPYRIGHT OWNER OR CONTRIBUTORS BE LIABLE FOR ANY DIRECT, INDIRECT, INCIDENTAL, SPECIAL, EXEMPLARY, OR CONSEQUENTIAL DAMAGES (INCLUDING, BUT NOT LIMITED TO, PROCUREMENT OF SUBSTITUTE GOODS OR SERVICES; LOSS OF USE, DATA, OR PROFITS; OR BUSINESS INTERRUPTION) HOWEVER CAUSED AND ON ANY THEORY OF LIABILITY, WHETHER IN CONTRACT, STRICT LIABILITY, OR TORT (INCLUDING NEGLIGENCE OR OTHERWISE) ARISING IN ANY WAY OUT OF THE USE OF THIS SOFTWARE, EVEN IF ADVISED OF THE POSSIBILITY OF SUCH DAMAGE.

Copyright (c) 2005-2012, Thomas BERNARD

All rights reserved.

Redistribution and use in source and binary forms, with or without modification, are permitted provided that the following conditions are met:

1. Redistributions of source code must retain the above copyright notice, this list of conditions and the following disclaimer.
2. Redistributions in binary form must reproduce the above copyright notice, this list of conditions and the following disclaimer in the documentation and/or other materials provided with the distribution.
3. Neither the name of Thomas BERNARD nor the names of its contributors may be used to endorse or promote products derived from this software without specific prior written permission.

THIS SOFTWARE IS PROVIDED BY THE COPYRIGHT HOLDERS AND CONTRIBUTORS "AS IS" AND ANY EXPRESS OR IMPLIED WARRANTIES, INCLUDING, BUT NOT LIMITED TO, THE IMPLIED WARRANTIES OF MERCHANTABILITY AND FITNESS FOR A PARTICULAR PURPOSE ARE DISCLAIMED. IN NO EVENT SHALL THE COPYRIGHT OWNER OR CONTRIBUTORS BE LIABLE FOR ANY DIRECT, INDIRECT, INCIDENTAL, SPECIAL, EXEMPLARY, OR CONSEQUENTIAL DAMAGES (INCLUDING, BUT NOT LIMITED TO, PROCUREMENT OF SUBSTITUTE GOODS OR SERVICES; LOSS OF USE, DATA, OR PROFITS; OR BUSINESS INTERRUPTION) HOWEVER CAUSED AND ON ANY THEORY OF LIABILITY, WHETHER IN CONTRACT, STRICT LIABILITY, OR TORT (INCLUDING NEGLIGENCE OR OTHERWISE) ARISING IN ANY WAY OUT OF THE USE OF THIS SOFTWARE, EVEN IF ADVISED OF THE POSSIBILITY OF SUCH DAMAGE.

Various copyrights apply to this package, listed in various separate parts below. Please make sure that you read all the parts.

Part 1: CMU/UCD copyright notice: (BSD like)

Copyright 1989, 1991, 1992 by Carnegie Mellon University Derivative Work - 1996, 1998-2000

Copyright 1996, 1998-2000 The Regents of the University of California

All Rights Reserved

Permission to use, copy, modify and distribute this software and its documentation for any purpose and without fee is hereby granted, provided that the above copyright notice appears in all copies and that both that copyright notice and this permission notice appear in supporting documentation, and that the name of CMU and The Regents of the University of California not be used in advertising or publicity pertaining to distribution of the software without specific written permission.

CMU AND THE REGENTS OF THE UNIVERSITY OF CALIFORNIA DISCLAIM ALL WARRANTIES WITH REGARD TO THIS SOFTWARE, INCLUDING ALL IMPLIED WARRANTIES OF MERCHANTABILITY AND FITNESS. IN NO EVENT SHALL CMU OR THE REGENTS OF THE UNIVERSITY OF CALIFORNIA BE LIABLE FOR ANY SPECIAL, INDIRECT OR CONSEQUENTIAL DAMAGES OR ANY DAMAGES WHATSOEVER RESULTING FROM THE LOSS OF USE, DATA OR PROFITS, WHETHER IN AN ACTION OF CONTRACT, NEGLIGENCE OR OTHER TORTIOUS ACTION, ARISING OUT OF OR IN CONNECTION WITH THE USE OR PERFORMANCE OF THIS SOFTWARE.

Part 2 : Networks Associates Technology, Inc copyright notice (BSD)

Copyright (c) 2001-2003, Networks Associates Technology, Inc

All rights reserved.

Redistribution and use in source and binary forms, with or without modification, are permitted provided that the following conditions are met: yy Redistributions of source code must retain the above copyright notice, this list of conditions and the following disclaimer. yy Redistributions in binary form must reproduce the above copyright notice, this list of conditions and the following disclaimer in the documentation and/or other materials provided with the distribution. yy Neither the name of the Networks Associates Technology, Inc nor the names of its contributors may be used to endorse or promote products derived from this software without specific prior written permission.

THIS SOFTWARE IS PROVIDED BY THE COPYRIGHT HOLDERS AND CONTRIBUTORS "AS IS" AND ANY EXPRESS OR IMPLIED WARRANTIES, INCLUDING, BUT NOT LIMITED TO, THE IMPLIED WARRANTIES OF MERCHANTABILITY AND FITNESS FOR A PARTICULAR PURPOSE ARE DISCLAIMED. IN NO EVENT SHALL THE COPYRIGHT HOLDERS OR CONTRIBUTORS BE LIABLE FOR ANY DIRECT, INDIRECT, INCIDENTAL, SPECIAL, EXEMPLARY, OR CONSEQUENTIAL DAMAGES (INCLUDING, BUT NOT LIMITED TO, PROCUREMENT OF SUBSTITUTE GOODS OR SERVICES; LOSS OF USE, DATA, OR PROFITS; OR BUSINESS INTERRUPTION) HOWEVER CAUSED AND ON ANY THEORY OF LIABILITY, WHETHER IN CONTRACT, STRICT LIABILITY, OR TORT (INCLUDING NEGLIGENCE OR OTHERWISE) ARISING IN ANY WAY OUT OF THE USE OF THIS SOFTWARE, EVEN IF ADVISED OF THE POSSIBILITY OF SUCH DAMAGE.

Part 3: Cambridge Broadband Ltd. copyrightnotice (BSD)

Portions of this code are copyright (c) 2001-2003, Cambridge Broadband Ltd.

All rights reserved.

Redistribution and use in source and binary forms, with or without modification, are permitted provided that the following conditions are met: yy Redistributions of source code must retain the above copyright notice, this list of conditions and the following disclaimer. yy Redistributions in binary form must reproduce the above copyright notice, this list of conditions and the following disclaimer in the documentation and/or other materials provided with the distribution. yy The name of Cambridge Broadband Ltd. may not be used to endorse or promote products derived from this software without specific prior written permission.

THIS SOFTWARE IS PROVIDED BY THE COPYRIGHT HOLDER "AS IS" AND ANY EXPRESS OR IMPLIED WARRANTIES, INCLUDING, BUT NOT LIMITED TO, THE IMPLIED WARRANTIES OF MERCHANTABILITY AND FITNESS FOR A PARTICULAR PURPOSE ARE DISCLAIMED. IN NO EVENT SHALL THE COPYRIGHT HOLDER BE LIABLE FOR ANY DIRECT, INDIRECT, INCIDENTAL, SPECIAL, EXEMPLARY, OR CONSEQUENTIAL DAMAGES (INCLUDING, BUT NOT LIMITED TO, PROCUREMENT OF SUBSTITUTE GOODS OR SERVICES; LOSS OF USE, DATA, OR PROFITS; OR BUSINESS INTERRUPTION) HOWEVER CAUSED AND ON ANY THEORY OF LIABILITY, WHETHER IN CONTRACT, STRICT LIABILITY, OR TORT (INCLUDING NEGLIGENCE OR OTHERWISE) ARISING IN ANY WAY OUT OF THE USE OF THIS SOFTWARE, EVEN IF ADVISED OF THE POSSIBILITY OF SUCH DAMAGE.

Part 4: Sun Microsystems, Inc. copyright notice

(BSD)

Copyright (c) 2003 Sun Microsystems, Inc., 4150 Network

Circle, Santa Clara, California 95054, U.S.A.

All rights reserved.

Use is subject to license terms below. This distribution may include materials developed by third parties. Sun, Sun Microsystems, the Sun logo and Solaris are trademarks or registered trademarks of Sun Microsystems, Inc. in the U.S. and other countries. Redistribution and use in source and binary forms, with or without modification, are permitted provided that the following conditions are met: yy Redistributions of source code must retain the above copyright notice, this list of conditions and the following disclaimer. yy Redistributions in binary form must reproduce the above copyright notice, this list of conditions and the following disclaimer in the documentation and/or other materials provided with the distribution. yy Neither the name of the Sun Microsystems, Inc. nor the names of its contributors may be used to endorse or promote products derived from this software without specific prior written permission.

THIS SOFTWARE IS PROVIDED BY THE COPYRIGHT HOLDERS AND CONTRIBUTORS "AS IS" AND ANY EXPRESS OR IMPLIED WARRANTIES, INCLUDING, BUT NOT LIMITED TO, THE IMPLIED WARRANTIES OF MERCHANTABILITY AND FITNESS FOR A PARTICULAR PURPOSE ARE DISCLAIMED. IN NO EVENT SHALL THE COPYRIGHT HOLDERS OR CONTRIBUTORS BE LIABLE FOR ANY DIRECT, INDIRECT, INCIDENTAL, SPECIAL, EXEMPLARY, OR CONSEQUENTIAL DAMAGES (INCLUDING, BUT NOT LIMITED TO, PROCUREMENT OF SUBSTITUTE GOODS OR SERVICES; LOSS OF USE, DATA, OR PROFITS; OR BUSINESS INTERRUPTION) HOWEVER CAUSED AND ON ANY THEORY OF LIABILITY, WHETHER IN CONTRACT, STRICT LIABILITY, OR TORT (INCLUDING NEGLIGENCE OR OTHERWISE) ARISING IN ANY WAY OUT OF THE USE OF THIS SOFTWARE, EVEN IF ADVISED OF THE POSSIBILITY OF SUCH DAMAGE.

Part 5: Sparta, Inc copyright notice (BSD)

Copyright (c) 2003-2009, Sparta, Inc

All rights reserved.

Redistribution and use in source and binary forms, with or without modification, are permitted provided that the following conditions are met: yy Redistributions of source code must retain the above copyright notice, this list of conditions and the following disclaimer. yy Redistributions in binary form must reproduce the

above copyright notice. this list of conditions and the following disclaimer in the documentation and/or other materials provided with the distribution. yy Neither the name of Sparta, Inc nor the names of its contributors may be used to endorse or promote products derived from this software without specific prior written permission.

THIS SOFTWARE IS PROVIDED BY THE COPYRIGHT HOLDERS AND CONTRIBUTORS "AS IS" AND ANY EXPRESS OR IMPLIED WARRANTIES. INCLUDING, BUT NOT LIMITED TO, THE IMPLIED WARRANTIES OF MERCHANTABILITY AND FITNESS FOR A PARTICULAR PURPOSE ARE DISCLAIMED. IN NO EVENT SHALL THE COPYRIGHT HOLDERS OR CONTRIBUTORS BE LIABLE FOR ANY DIRECT, INDIRECT, INCIDENTAL, SPECIAL, EXEMPLARY, OR CONSEQUENTIAL DAMAGES (INCLUDING, BUT NOT LIMITED TO, PROCUREMENT OF SUBSTITUTE GOODS OR SERVICES; LOSS OF USE, DATA, OR PROFITS; OR BUSINESS INTERRUPTION) HOWEVER CAUSED AND ON ANY THEORY OF LIABILITY, WHETHER IN CONTRACT, STRICT LIABILITY, OR TORT (INCLUDING NEGLIGENCE OR OTHERWISE) ARISING IN ANY WAY OUT OF THE USE OF THIS SOFTWARE, EVEN IF ADVISED OF THE POSSIBILITY OF SUCH DAMAGE.

Part 6: Cisco/BUPTNIC copyright notice (BSD)

Copyright (c) 2004, Cisco, Inc and Information Network

Center of Beijing University of Posts and Telecommunications.

All rights reserved.

Redistribution and use in source and binary forms, with or without modification, are permitted provided that the following conditions are met: yy Redistributions of source code must retain the above copyright notice, this list of conditions and the following disclaimer. yy Redistributions in binary form must reproduce the above copyright notice, this list of conditions and the following disclaimer in the documentation and/or other materials provided with the distribution. yy Neither the name of Cisco, Inc, Beijing University of Posts and Telecommunications, nor the names of their contributors may be used to endorse or promote products derived from this software without specific prior written permission.

THIS SOFTWARE IS PROVIDED BY THE COPYRIGHT HOLDERS AND CONTRIBUTORS "AS IS" AND ANY EXPRESS OR IMPLIED WARRANTIES. INCLUDING, BUT NOT LIMITED TO, THE IMPLIED WARRANTIES OF MERCHANTABILITY AND FITNESS FOR A PARTICULAR PURPOSE ARE DISCLAIMED. IN NO EVENT SHALL THE COPYRIGHT HOLDERS OR CONTRIBUTORS BE LIABLE FOR ANY DIRECT, INDIRECT, INCIDENTAL, SPECIAL, EXEMPLARY, OR CONSEQUENTIAL DAMAGES (INCLUDING, BUT NOT LIMITED TO, PROCUREMENT OF SUBSTITUTE GOODS OR SERVICES; LOSS OF USE, DATA, OR PROFITS; OR BUSINESS INTERRUPTION) HOWEVER CAUSED AND ON ANY THEORY OF LIABILITY, WHETHER IN CONTRACT, STRICT LIABILITY, OR TORT (INCLUDING NEGLIGENCE OR OTHERWISE) ARISING IN ANY WAY OUT OF THE USE OF THIS SOFTWARE, EVEN IF ADVISED OF THE POSSIBILITY OF SUCH DAMAGE.

Part 7: Fabasoft R&D Software Software GmbH & Co KG copyright Notice (BSD)

Copyright (c) Fabasoft R&D Software GmbH & Co KG, 2003oss@fabasoft.com

Author: Bernhard Penz

Redistribution and use in source and binary forms, with or without modification, are permitted provided that the following conditions are met: yy Redistributions of source code must retain the above copyright notice, this list of conditions and the following disclaimer. yy Redistributions in binary form must reproduce the above copyright notice, this list of conditions and the following disclaimer in the documentation and/or other materials provided with the distribution. yy The name of Fabasoft R&D Software GmbH & Co KG or any of its subsidiaries, brand or product names may not be used to endorse or promote products derived from this software without specific prior written permission.

THIS SOFTWARE IS PROVIDED BY THE COPYRIGHT HOLDER "AS IS" AND ANY EXPRESS OR IMPLIED WARRANTIES, INCLUDING, BUT NOT LIMITED TO, THE IMPLIED WARRANTIES OF MERCHANTABILITY AND FITNESS FOR A PARTICULAR PURPOSE ARE DISCLAIMED. IN NO EVENT SHALL THE COPYRIGHT HOLDER BE LIABLE FOR ANY DIRECT, INDIRECT, INCIDENTAL, SPECIAL, EXEMPLARY, OR CONSEQUENTIAL DAMAGES (INCLUDING, BUT NOT LIMITED TO, PROCUREMENT OF SUBSTITUTE GOODS OR SERVICES; LOSS OF USE, DATA, OR PROFITS; OR BUSINESS INTERRUPTION) HOWEVER CAUSED AND ON ANY THEORY OF LIABILITY, WHETHER IN CONTRACT, STRICT LIABILITY, OR TORT (INCLUDING NEGLIGENCE OR OTHERWISE) ARISING IN ANY WAY OUT OF THE USE OF THIS SOFTWARE, EVEN IF ADVISED OF THE POSSIBILITY OF SUCH DAMAGE.

Part 8: Apple Inc. copyright notice (BSD)

Copyright (c) 2007 Apple Inc.

All rights reserved.

Redistribution and use in source and binary forms, with or without modification, are permitted provided that the following conditions are met:

1. Redistributions of source code must retain the above copyright notice, this list of conditions and the following disclaimer.
2. Redistributions in binary form must reproduce the above copyright notice, this list of conditions and the following disclaimer in the documentation and/or other materials provided with the distribution. 3. Neither the name of Apple Inc. ("Apple") nor the names of its contributors may be used to endorse or promote products derived from this software without specific prior written permission.

THIS SOFTWARE IS PROVIDED BY APPLE AND ITS CONTRIBUTORS "AS IS" AND ANY EXPRESS OR IMPLIED WARRANTIES, INCLUDING, BUT NOT LIMITED TO, THE IMPLIED WARRANTIES OF MERCHANTABILITY AND FITNESS FOR A PARTICULAR PURPOSE ARE DISCLAIMED. IN NO EVENT SHALL APPLE OR ITSCONTRIBUTORS BE LIABLE FOR ANY DIRECT, INDIRECT, INCIDENTAL, SPECIAL, EXEMPLARY, OR CONSEQUENTIAL DAMAGES (INCLUDING, BUT NOT LIMITED TO, PROCUREMENT OF SUBSTITUTE GOODS OR SERVICES; LOSS OF USE, DATA, OR PROFITS; OR BUSINESS INTERRUPTION) HOWEVER CAUSED AND ON ANY THEORY OF LIABILITY, WHETHER IN CONTRACT, STRICT LIABILITY, OR TORT (INCLUDING NEGLIGENCE OR OTHERWISE) ARISING IN ANY WAY OUT OF THE USE OF THIS SOFTWARE, EVEN IF ADVISED OF THE POSSIBILITY OF SUCH DAMAGE.

Part 9: ScienceLogic, LLC copyright notice(BSD)

Copyright (c) 2009, ScienceLogic, LLC

All rights reserved.

Redistribution and use in source and binary forms, with or without modification, are permitted provided that the following conditions aremet: yy Redistributions of source code must retain the above copyright notice, this list of conditions and the following disclaimer. yy Redistributions in binary form must reproduce the above copyright notice, this list of conditions and the following disclaimer in the documentation and/or other materials provided with the distribution. yy Neither the name of ScienceLogic, LLC nor the names of its contributors may be used to endorse or promote products derived from this software without specific prior written permission.

THIS SOFTWARE IS PROVIDED BY THE COPYRIGHT HOLDERS AND CONTRIBUTORS "AS IS" AND ANY EXPRESS OR IMPLIED WARRANTIES. INCLUDING, BUT NOT LIMITED TO, THE IMPLIED WARRANTIES OF MERCHANTABILITY AND FITNESS FOR A PARTICULAR PURPOSE ARE DISCLAIMED. IN NO EVENT SHALL THE COPYRIGHT HOLDERS OR CONTRIBUTORS BE LIABLE FOR ANY DIRECT, INDIRECT, INCIDENTAL, SPECIAL, EXEMPLARY, OR CONSEQUENTIAL DAMAGES (INCLUDING, BUT NOT LIMITED TO, PROCUREMENT OF SUBSTITUTE GOODS OR SERVICES; LOSS OF USE, DATA, OR PROFITS; OR BUSINESS INTERRUPTION) HOWEVER CAUSED AND ON ANY THEORY OF LIABILITY, WHETHER IN CONTRACT, STRICT LIABILITY, OR TORT (INCLUDING NEGLIGENCE OR OTHERWISE) ARISING IN ANY WAY OUT OF THE USE OF THIS SOFTWARE, EVEN IF ADVISED OF THE POSSIBILITY OF SUCH DAMAGE

The MIT License

Some software components of this product incorporate source code covered under the MIT license as follows

MIT License 2.0

- Acewidget, bettermeans, jquery-ui, libxml, libxml2, Mesa3D-MesaLib,mwEmbed,OpenGL Samples Pack, Wide Studio, xorg-server, dropbear-2012.55, ncurses-5.7

Copyright (c) 2011, The Dojo Foundation

Copyright 2010, AUTHORS.txt (http://jqueryui.com/about)

Dual licensed under the MIT or GPL Version 2 licenses.

- http://jquery.org/license

- http://docs.jquery.com/UI/Widget

Copyright Daniel Veillard

Copyright Igor Zlatovic <igor@zlatkovic.com>

Copyright Aleksey Sanin

Copyright Gary Pennington <Gary.Pennington@uk.sun.com>

Copyright Alfred Mickautsch <alfred@mickautsch.de>

Copyright Bjorn Reese <bjorn.reese@systematic.dk>

Copyright Joel W. Reed

Copyright William Brack <wbrack@mmm.com.hk>

Copyright (c) 2007-2010 The Khronos Group Inc.

Copyright Atish Kumar Patra

Copyright (c) 2006 Free Software Foundation, Inc.

Permission is hereby granted, free of charge, to any person obtaining a copy of this software and associated documentation files (the "Software"), to deal in the Software without restriction, including without limitation the rights to use, copy, modify, merge, publish, distribute, sublicense, and/or sell copies of the Software, and to permit persons to whom the Software is furnished to do so, subject to the following conditions:

The above copyright notice and this permission notice shall be included in all copies or substantial portions of the Software.

THE SOFTWARE IS PROVIDED "AS IS", WITHOUT WARRANTY OF ANY KIND, EXPRESS OR IMPLIED, INCLUDING BUT NOT LIMITED TO THE WARRANTIES OF MERCHANTABILITY, FITNESS FOR A PARTICULAR PURPOSE AND NONINFRINGEMENT. IN NO EVENT SHALL THE AUTHORS OR COPYRIGHT HOLDERS BE LIABLE FOR ANY CLAIM, DAMAGES OR OTHER LIABILITY, WHETHER IN AN ACTION OF CONTRACT, TORT OR OTHERWISE, ARISING FROM, OUT OF OR IN CONNECTION WITH THE SOFTWARE OR THE USE OR OTHER DEALINGS IN THE SOFTWARE.

Mozilla Public License

Since we, at Hanwha Techwin, used the Mozilla Firefox component without modifying the source code according to the MOZILLA Public license 1.1, we are not obliged to provide the source code of the corresponding component.

- Version 1.1

1. Definitions.

1.0.1. "Commercial Use" means distribution or otherwise making the Covered Code available to a third party.

1.1. "Contributor" means each entity that creates or contributes to the creation of Modifications.

1.2. "Contributor Version" means the combination of the Original Code, prior Modifications used by a Contributor, and the Modifications made by that particular Contributor.

1.3. "Covered Code" means the Original Code or Modifications or the combination of the Original Code and Modifications, in each case including portions thereof.

1.4. "Electronic Distribution Mechanism" means a mechanism generally accepted in the software development community for the electronic transfer of data.

1.5. "Executable" means Covered Code in any form other than Source Code.

1.6. "Initial Developer" means the individual or entity identified as the Initial Developer in the Source Code notice required by Exhibit A.

1.7. "Larger Work" means a work which combines Covered Code or portions thereof with code not governed by the terms of this License.

1.8. "License" means this document.

1.8.1. "Licensable" means having the right to grant, to the maximum extent possible, whether at the time of the initial grant or subsequently acquired, any and all of the rights conveyed herein.

1.9. "Modifications" means any addition to or deletion from the substance or structure of either the Original Code or any previous Modifications. When Covered Code is released as a series of files, a Modification is:

A. Any addition to or deletion from the contents of a file containing Original Code or previous Modifications.

B. Any new file that contains any part of the Original Code or previous Modifications.

1.10. "Original Code" means Source Code of computer software code which is described in the Source Code notice required by Exhibit A as Original Code, and which, at the time of its release under this License is not already Covered Code governed by this License.

1.10.1. "Patent Claims" means any patent claim(s), now owned or hereafter acquired, including without limitation, method, process, and apparatus claims, in any patent Licensable by grantor.

1.11. "Source Code" means the preferred form of the Covered Code for making modifications to it, including all modules it contains, plus any associated interface definition files, scripts used to control compilation and installation of an Executable, or source code differential comparisons against either the Original Code or another well known, available Covered Code of the Contributor's choice. The Source Code can be in a compressed or archival form, provided the appropriate decompression or de-archiving software is widely available for no charge.

1.12. "You" (or "Your") means an individual or a legal entity exercising rights under, and complying with all of the terms of, this License or a future version of this License issued under Section 6.1. For legal entities, "You" includes any entity which controls, is controlled by, or is under common control with You. For purposes of this definition, "control" means (a) the power, direct or indirect, to cause the direction or management of such entity, whether by contract or otherwise, or (b) ownership of more than fifty percent (50%) of the outstanding shares or beneficial ownership of such entity.

2. Source Code License.

2.1. The Initial Developer Grant. The Initial Developer hereby grants You a world-wide, royalty-free, non-exclusive license, subject to third party intellectual property claims:

(a) under intellectual property rights (other than patent or trademark) Licensable by Initial Developer to use, reproduce, modify, display, perform, sublicense and distribute the Original Code (or portions thereof) with or without Modifications, and/or as part of a Larger Work; and

(b) under Patents Claims infringed by the making, using or selling of Original Code, to make, have made, use, practice, sell, and offer for sale, and/or otherwise dispose of the Original Code (or portions thereof).

(c) the licenses granted in this Section 2.1(a) and (b) are effective on the date Initial Developer first distributes Original Code under the terms of this License.

(d) Notwithstanding Section 2.1(b) above, no patent license is granted: 1) for code that You delete from the Original Code; 2) separate from the Original Code; or 3) for infringements caused by: i) the modification of the Original Code or ii) the combination of the Original Code with other software or devices.

2.2. Contributor Grant. Subject to third party intellectual property claims, each Contributor hereby grants You a world-wide, royalty-free, non-exclusive license

(a) under intellectual property rights (other than patent or trademark) Licensable by Contributor, to use, reproduce, modify, display, perform, sublicense and distribute the Modifications created by such Contributor (or portions thereof) either on an unmodified basis, with other Modifications, as Covered Code and/or as part of a Larger Work; and

(b) under Patent Claims infringed by the making, using, or selling of Modifications made by that Contributor either alone and/or in combination with its Contributor Version (or portions of such combination), to make, use, sell, offer for sale, have made, and/or otherwise dispose of: 1) Modifications made by that Contributor (or portions thereof); and 2) the combination of Modifications made by that Contributor with its Contributor Version (or portions of such combination).

(c) the licenses granted in Sections 2.2(a) and 2.2(b) are effective on the date Contributor first makes Commercial Use of the Covered Code.

(d) Notwithstanding Section 2.2(b) above, no patent license is granted: 1) for any code that Contributor has deleted from the Contributor Version; 2) separate from the Contributor Version; 3) for infringements caused by: i) third party modifications of Contributor Version or ii) the combination of Modifications made by that Contributor with other software (except as part of the Contributor Version) or other devices; or 4) under Patent Claims infringed by Covered Code in the absence of Modifications made by that Contributor.

3. Distribution Obligations.

3.1. Application of License. The Modifications which You create or to which You contribute are governed by the terms of this License, including without limitation Section 2.2. The Source Code version of Covered Code may be distributed only under the terms of this License or a future version of this License released under Section 6.1, and You must include a copy of this License with every copy of the Source Code You distribute. You may not offer or impose any terms on any Source Code version that alters or restricts the applicable version of this License or the recipients' rights hereunder. However, You may include an additional document offering the additional rights described in Section 3.5.

3.2. Availability of Source Code. Any Modification which You create or to which You contribute must be made available in Source Code form under the terms of this License either on the same media as an Executable version or via an accepted Electronic Distribution Mechanism to anyone to whom you made an Executable version available; and if made available via Electronic Distribution Mechanism, must remain available for at least twelve (12) months after the date it initially became available, or at least six (6) months after a subsequent version of that particular Modification has been made available to such recipients. You are responsible for ensuring that the Source Code version remains available even if the Electronic Distribution Mechanism is maintained by a third party.

3.3. Description of Modifications. You must cause all Covered Code to which You contribute to contain a file documenting the changes You made to create that Covered Code and the date of any change. You must include a prominent statement that the Modification is derived, directly or indirectly, from Original Code provided by the Initial Developer and including the name of the Initial Developer in (a) the Source Code, and (b) in any notice in an Executable version or related documentation in which You describe the origin or ownership of the Covered Code.

3.4. Intellectual Property Matters

(a) Third Party Claims. If Contributor has knowledge that a license under a third party's intellectual property rights is required to exercise the rights granted by such Contributor under Sections 2.1 or 2.2, Contributor must include a text file with the Source Code distribution titled "LEGAL" which describes the claim and the party making the claim in sufficient detail that a recipient will know whom to contact. If Contributor obtains such knowledge after the Modification is made available as described in Section 3.2, Contributor shall promptly modify the LEGAL file in all copies Contributor makes available thereafter and shall take other steps (such as notifying appropriate mailing lists or newsgroups) reasonably calculated to inform those who received the Covered Code that new knowledge has been obtained.

(b) Contributor APIs. If Contributor's Modifications include an application programming interface and Contributor has knowledge of patent licenses which are reasonably necessary to implement that API, Contributor must also include this information in the LEGAL file.

(c) Representations.

Contributor represents that, except as disclosed pursuant to Section 3.4(a) above, Contributor believes that Contributor's Modifications are Contributor's original creation(s) and/or Contributor has sufficient rights to grant the rights conveyed by this License.

3.5. Required Notices. You must duplicate the notice in Exhibit A in each file of the Source Code. If it is not possible to put such notice in a particular Source Code file due to its structure, then You must include such notice in a location (such as a relevant directory) where a user would be likely to look for such a notice. If You created one or more Modification(s) You may add your name as a Contributor to the notice described in Exhibit A. You must also duplicate this License in any documentation for the Source Code where You describe recipients' rights or ownership rights relating to Covered Code. You may choose to offer, and to charge a fee for, warranty, support, indemnity or liability obligations to one or more recipients of Covered Code. However, You may do so only on Your own behalf, and not on behalf of the Initial Developer or any Contributor. You must make it absolutely clear than any such warranty, support, indemnity or liability obligation is offered by You alone, and You hereby agree to indemnify the Initial Developer and every Contributor for any liability incurred by the Initial Developer or such Contributor as a result of warranty, support, indemnity or liability terms You offer.

3.6. Distribution of Executable Versions. You may distribute Covered Code in Executable form only if the requirements of Section 3.1-3.5 have been met for that Covered Code, and if You include a notice stating that the Source Code version of the Covered Code is available under the terms of this License, including a description of how and where You have fulfilled the obligations of Section 3.2. The notice must be conspicuously included in any notice in an Executable version, related documentation or collateral in which You describe recipients' rights relating to the Covered Code. You may distribute the Executable version of Covered Code or ownership rights under a license of Your choice, which may contain terms different from this License, provided that You are in compliance with the terms of this License and that the license for the Executable version does not attempt to limit or alter the recipient's rights in the Source Code version from the rights set forth in this License. If You distribute the Executable version under a different license You must make it absolutely clear that any terms which differ from this License are offered by You alone, not by the Initial Developer or any Contributor. You hereby agree to indemnify the Initial Developer and every Contributor for any liability incurred by the Initial Developer or such Contributor as a result of any such terms You offer.

3.7. Larger Works. You may create a Larger Work by combining Covered Code with other code not governed by the terms of this License and distribute the Larger Work as a single product. In such a case, You must make sure the requirements of this License are fulfilled for the Covered Code.

4. Inability to Comply Due to Statute or Regulation.

If it is impossible for You to comply with any of the terms of this License with respect to some or all of the Covered Code due to statute, judicial order, or regulation then You must: (a) comply with the terms of this License to the maximum extent possible; and (b) describe the limitations and the code they affect. Such description must be included in the LEGAL file described in Section 3.4 and must be included with all distributions of the Source Code. Except to the extent prohibited by statute or regulation, such description must be sufficiently detailed for a recipient of ordinary skill to be able to understand it.

5. Application of this License.

This License applies to code to which the Initial Developer has attached the notice in Exhibit A and to related Covered Code.

6. Versions of the License.

6.1. New Versions. Netscape Communications Corporation ("Netscape") may publish revised and/or new versions of the License from time to time. Each version will be given a distinguishing version number.

6.2. Effect of New Versions. Once Covered Code has been published under a particular version of the License, You may always continue to use it under the terms of that version. You may also choose to use such Covered Code under the terms of any subsequent version of the License published by Netscape. No one other than Netscape has the right to modify the terms applicable to Covered Code created under this License.

6.3. Derivative Works. If You create or use a modified version of this License (which you may only do in order to apply it to code which is not already Covered Code governed by this License), You must (a) rename Your license so that the phrases "Mozilla", "MOZILLAPL", "MOZPL", "Netscape", "MPL", "NPL" or any confusingly similar phrase do not appear in your license (except to note that your license differs from this License) and (b) otherwise make it clear that Your version of the license contains terms which differ from the Mozilla Public License and Netscape Public License. (Filling in the name of the Initial Developer, Original Code or Contributor in the notice described in Exhibit A shall not of themselves be deemed to be modifications of this License.)

7. DISCLAIMER OF WARRANTY.

COVERED CODE IS PROVIDED UNDER THIS LICENSE ON AN "AS IS" BASIS, WITHOUT WARRANTY OF ANY KIND, EITHER EXPRESSED OR IMPLIED, INCLUDING, WITHOUT LIMITATION, WARRANTIES THAT THE COVERED CODE IS FREE OF DEFECTS, MERCHANTABLE, FIT FOR A PARTICULAR PURPOSE OR NON-INFRINGING. THE ENTIRE RISK AS TO THE QUALITY AND PERFORMANCE OF THE COVERED CODE IS WITH YOU. SHOULD ANY COVERED CODE PROVE DEFECTIVE IN ANY RESPECT, YOU (NOT THE INITIAL DEVELOPER OR ANY OTHER CONTRIBUTOR) ASSUME THE COST OF ANY NECESSARY SERVICING, REPAIR OR CORRECTION. THIS DISCLAIMER OF WARRANTY CONSTITUTES AN ESSENTIAL PART OF THIS LICENSE. NO USE OF ANY COVERED CODE IS AUTHORIZED HEREUNDER EXCEPT UNDER THIS DISCLAIMER.

8. TERMINATION.

8.1. This License and the rights granted hereunder will terminate automatically if You fail to comply with terms herein and fail to cure such breach within 30 days of becoming aware of the breach. All sublicenses to the Covered Code which are properly granted shall survive any termination of this License. Provisions which, by their nature, must remain in effect beyond the termination of this License shall survive.

8.2. If You initiate litigation by asserting a patent infringement claim (excluding declatory judgment actions) against Initial Developer or a Contributor (the Initial Developer or Contributor against whom You file such action is referred to as "Participant") alleging that:

(a) such Participant's Contributor Version directly or indirectly infringes any patent, then any and all rights granted by such Participant to You under Sections 2.1 and/or 2.2 of this License shall, upon 60 days notice from Participant terminate prospectively, unless if within 60 days after receipt of notice You either: (i) agree in writing to pay Participant a mutually agreeable reasonable royalty for Your past and future use of Modifications made by such Participant, or (ii) withdraw Your litigation claim with respect to the Contributor Version against such Participant. If within 60 days of notice, a reasonable royalty and payment arrangement are not mutually agreed upon in writing by the parties or the litigation claim is not withdrawn, the rights granted by Participant to You under Sections 2.1 and/or 2.2 automatically terminate at the expiration of the 60 day notice period specified above.

(b) any software, hardware, or device, other than such Participant's Contributor Version, directly or indirectly infringes any patent, then any rights granted to You by such Participant under Sections 2.1(b) and 2.2(b) are revoked effective as of the date You first made, used, sold, distributed, or had made, Modifications made by that Participant.

8.3. If You assert a patent infringement claim against Participant alleging that such Participant's Contributor Version directly or indirectly infringes any patent where such claim is resolved (such as by license or settlement) prior to the initiation of patent infringement litigation, then the reasonable value of the licenses granted by such Participant under Sections 2.1 or 2.2 shall be taken into account in determining the amount or value of any payment or license.

8.4. In the event of termination under Sections 8.1 or 8.2 above, all end user license agreements (excluding distributors and resellers) which have been validly granted by You or any distributor hereunder prior to termination shall survive termination.

9. LIMITATION OF LIABILITY.

UNDER NO CIRCUMSTANCES AND UNDER NO LEGAL THEORY, WHETHER TORT (INCLUDING NEGLIGENCE), CONTRACT, OR OTHERWISE, SHALL YOU, THE INITIAL DEVELOPER, ANY OTHER CONTRIBUTOR, OR ANY DISTRIBUTOR OF COVERED CODE, OR ANY SUPPLIER OF ANY OF SUCH PARTIES, BE LIABLE TO ANY PERSON FOR ANY INDIRECT, SPECIAL, INCIDENTAL, OR CONSEQUENTIAL DAMAGES OF ANY CHARACTER INCLUDING, WITHOUT LIMITATION, DAMAGES FOR LOSS OF GOODWILL, WORK STOPPAGE, COMPUTER FAILURE OR MALFUNCTION, OR ANY AND ALL OTHER COMMERCIAL DAMAGES OR LOSSES. EVEN IF SUCH PARTY SHALL HAVE BEEN INFORMED OF THE POSSIBILITY OF SUCH DAMAGES. THIS LIMITATION OF LIABILITY SHALL NOT APPLY TO LIABILITY FOR DEATH OR PERSONAL INJURY RESULTING FROM SUCH PARTY'S NEGLIGENCE TO THE EXTENT APPLICABLE LAW PROHIBITS SUCH LIMITATION. SOME JURISDICTIONS DO NOT ALLOW THE EXCLUSION OR LIMITATION OF INCIDENTAL OR CONSEQUENTIAL DAMAGES, SO THIS EXCLUSION AND LIMITATION MAY NOT APPLY TO YOU. 10. U.S. GOVERNMENT END USERS.

The Covered Code is a "commercial item," as that term is defined in 48 C.F.R. 2.101 (Oct. 1995), consisting of "commercial computer software" and "commercial computer software documentation," as such terms are used in 48 C.F.R. 12.212 (Sept. 1995). Consistent with 48 C.F.R. 12.212 and 48 C.F.R. 227.7202-1 through 227.7202-4 (June 1995), all U.S. Government End Users acquire Covered Code with only those rights set forth herein.

11. MISCELLANEOUS.

This License represents the complete agreement concerning subject matter hereof. If any provision of this License is held to be unenforceable, such provision shall be reformed only to the extent necessary to make it enforceable. This License shall be governed by California law provisions (except to the extent applicable law, if any, provides otherwise), excluding its conflict-of-law provisions. With respect to disputes in which at least one party is a citizen of, or an entity chartered or registered to do business in the United States of America, any litigation relating to this License shall be subject to the jurisdiction of the Federal Courts of the Northern District of California, with venue lying in Santa Clara County, California, with the losing party responsible for costs, including without limitation, court costs and reasonable attorneys' fees and expenses. The application of the United Nations Convention on Contracts for the International Sale of Goods is expressly excluded. Any law or regulation which

provides that the language of a contract shall be construed against the drafter shall not apply to this License.

12. RESPONSIBILITY FOR CLAIMS.

As between Initial Developer and the Contributors, each party is responsible for claims and damages arising, directly or indirectly, out of its utilization of rights under this License and You agree to work with Initial Developer and Contributors to distribute such responsibility on an equitable basis. Nothing herein is intended or shall be deemed to constitute any admission of liability.

13. MULTIPLE-LICENSED CODE.

Initial Developer may designate portions of the Covered Code as Multiple-Licensed. Multiple-Licensedmeans that the Initial Developer permits you to utilize portions of the Covered Code under Your choice of the MPL or the alternative licenses, if any, specified by the Initial Developer in the file described in Exhibit A.

EXHIBIT A -Mozilla Public License.

The contents of this file are subject to the Mozilla Public License Version 1.1 (the "License"); you may not use this file except in compliance with the License. You may obtain a copy of the License at http://www.mozilla.org/MPL/Software distributed under the License is distributed on an "AS IS" basis, WITHOUT WARRANTY OF ANY KIND, either express or implied. See the License for the specific language governing rights and limitations under the License.

The Original Code is _____.

The Initial Developer of the Original Code is _____. Portions created by _____ are Copyright (C) _____ _____. All Rights Reserved.

Contributor(s): _____.

Alternatively, the contents of this file may be used under the terms of the ____ license (the [___] License), in which case the provisions of [_____] License are applicable instead of those above. If you wish to allow use of your version of this file only under the terms of the [___] License and not to allow others to use your version of this file under the MPL, indicate your decision by deleting the provisions above and replace them with the notice and other provisions required by the [___] License. If you do not delete the provisions above, a recipient may use your version of this file under either the MPL or the [___] License."

[NOTE: The text of this Exhibit A may differ slightly from the text of the notices in the Source Code files of the Original Code. You should use the text of this Exhibit A rather than the text found in the Original Code Source Code for Your Modifications

The Independent JPEG Group's JPEG Software

The software included in this product contains copyrighted software that is licensed under the JPEG license.

- JPEG license
  - Code project . Generating Outline OpenGL. Libjpeg

This distribution contains the sixth public release of the Independent JPEG Group's free JPEG software. You are welcome to redistribute this software and to use it for any purpose, subject to the conditions under LEGAL ISSUES, below.

Serious users of this software (particularly those incorporating it into larger programs) should contact IJG at jpeg-info@uunet.uu.net to be added to our electronic mailing list. Mailing list members are notified of updates and have a chance to participate in technical discussions, etc.

This software is the work of Tom Lane, Philip Gladstone, Jim Boucher, Lee Crocker, Julian Minguillon, Luis Ortiz, George Phillips, Davide Rossi, Guido Vollbeding, Ge' Weijers, and other members of the Independent JPEG Group.

IJG is not affiliated with the official ISO JPEG standards committee.

LEGAL ISSUES

==========

In plain English:

1. We don't promise that this software works. (But if you find any bugs, please let us know!)

2. You can use this software for whatever you want. You don't have to pay us.

3. You may not pretend that you wrote this software. If you use it in a program, you must acknowledge somewhere in your documentation that you've used the IJG code.

In legalese:

The authors make NO WARRANTY or representation, either express or implied, with respect to this software, its quality, accuracy, merchantability, or fitness for a particular purpose. This software is provided "AS IS", and you, its user, assume the entire risk as to its quality and accuracy.

This software is copyright (C) 1991-1996, Thomas G. Lane. All Rights Reserved except as specified below.

Permission is hereby granted to use, copy, modify, and distribute this software (or portions thereof) for any purpose, without fee, subject to these conditions:

(1) If any part of the source code for this software is distributed, then this README file must be included, with this copyright and no-warranty notice unaltered; and any additions, deletions, or changes to the original files must be clearly indicated in accompanying documentation.

(2) If only executable code is distributed, then the accompanying documentation must state that "this software is based in part on the work of the Independent JPEG Group".

(3) Permission for use of this software is granted only if the user accepts full responsibility for any undesirable consequences; the authors accept NO LIABILITY for damages of any kind.

These conditions apply to any software derived from or based on the IJG code, not just to the unmodified library. If you use our work, you ought to acknowledge us.

Permission is NOT granted for the use of any IJG author's name or company name in advertising or publicity relating to this software or products derived from it. This software may be referred to only as "the Independent JPEG Group's software".

We specifically permit and encourage the use of this software as the basis of commercial products, provided that all warranty or liability claims are assumed by the product vendor.

ansi2knr.c is included in this distribution by permission of L. Peter Deutsch, sole proprietor of its copyright holder, Aladdin Enterprises of Menlo Park, CA.

ansi2knr.c is NOT covered by the above copyright and conditions, but instead by the usual distribution terms of the Free Software Foundation; principally, that you must include source code if you redistribute it. (See the file ansi2knr.c for full details.) However, since ansi2knr. c is not needed as part of any program generated from the IJG code, this does not limit you more than the foregoing paragraphs do.

The Unix configuration script "configure" was produced with GNU Autoconf. It is copyright by the Free Software Foundation but is freely distributable. The same holds for its supporting scripts (config.guess, config.sub, ltconfig, ltmain. sh). Another support script, install-sh, is copyright by M.I.T. but is also freely distributable.

It appears that the arithmetic coding option of the JPEG spec is covered by patents owned by IBM, AT&T, and Mitsubishi. Hence arithmetic coding cannot legally be used without obtaining one or more licenses. For this reason, support for arithmetic coding has been removed from the free JPEG software. (Since arithmetic coding provides only a marginal gain over the unpatented Huffman mode, it is unlikely that very many implementations will support it.) So far as we are aware, there are no patent restrictions on the remaining code.

The IJG distribution formerly included code to read and write GIF files. To avoid entanglement with the Unisys LZW patent, GIF reading support has been removed altogether, and the GIF writer has been simplified to produce "uncompressed GIFs". This technique does not use the LZW algorithm; the resulting GIF files are larger than usual, but are readable by all standard GIF decoders.

We are required to state that

"The Graphics Interchange Format(c) is the Copyright property of CompuServe Incorporated. GIF(sm) is a Service Mark property of CompuServe Incorporated."

T-Kernel License

- This Product uses the Source Code of T-Kernel under T-License granted by the T-Engine Forum(www.t-engine.org)

T-License [License Agreement for Source Code of T-Kernel]

established by T-Engine Forum
on January 23, 2004
revised on June 17, 2004
revised on December 21, 2006
revised on March 24, 2009

Article 1. Scope of License Agreement

1. This License Agreement sets forth copyrights and the terms and conditions of use applicable to the source code of T-Kernel distributed by T-Engine Forum and any derivative work created therefrom.

Article 2. Definition

1. "T-Kernel" means a real-time operating system controlled and distributed by T-Engine Forum on behalf of the copyright holder thereof.

2. "Source Code" means a source program, including related comments and documentations, for the T-Kernel and the Ported Source Code defined in Article 2.8 which is registered with T-Engine Forum.

3. "Hardware-dependent Part" means the part of the Source Code which depends on hardware and needs to be changed when the Source Code is ported and operated on the target hardware, and is designated and separated as such part.

4. "Compiler-dependent Part" means the part of the Source Code which depends on compiler and needs to be changed when the Source Code is ported and operated on the target hardware, and is designated and separated as such part.

5. "Header File" means the part of the Source Code which contains definitions necessary to develop application programs.

6. "T-Engine Hardware" means the hardware which is manufactured in accordance with the T-Engine Hardware specifications or the µT-Engine Hardware specifications issued by T-Engine Forum, and registered with T-Engine Forum.

7. "Similar Hardware to T-Engine Hardware" means any hardware (including software which emulates hardware) other than that defined in Article 2.6 above, on which the T-Kernel can be operated.

8. "Ported Source Code" means a source program produced from the Source Code by modifying only its Hardwaredependent Part and/or Compiler-dependent Part to enable it to be operated on the T-Engine Hardware or the Similar Hardware to T-Engine Hardware. The Ported Source Code which is registered with T-Engine Forum shall be included in the Source Code.

9. "Modified Source Code" means a source program modified from the Source Code for the purpose of improving its performance, increasing or decreasing its function, and the like. The Ported Source Code shall not be included in the Modified Source Code.

10. "Binary Code" means an executable code form which is created by compiling programs, which include all or part of the Source Code or the Modified Source Code.

11. "Derivative Work" means the Modified Source Code or the Binary Code.

12. "Embedded Product" means any product which operates with executable code form of the Source Code, the Modified Source Code or the Binary Code loaded on its hardware.

13. "End User" means a consumer who uses the Embedded Product.

14. "System Developer" means any person who develops the Embedded Product by itself or has a third party develop the same, and provides, whether with or without payment, the End User with the Embedded Product.

15. "Distributor of Modification" means any person who produces the Modified Source Code and, whether with or without payment, distributes the same to any third party.

16. "Patch for Modification" means a difference, program, system, or the like in order to create the Modified Source Code from the Source Code or the Binary Code thereof.

17. "Vicarious Execution of Patch Processing" means vicarious execution service to create the Modified Source Code applying the Patch for Modification to the Source Code or the Binary Code thereof.

18. "Source Code User" means a person who uses the Source Code.

19. "Distribution" means any of the following acts:

1. to transmit a work to a large number of specific persons through the Internet communication, broadcasting, and the like;

2. to transmit a work to the general public through the Internet communication, broadcasting. and the like automatically in response to a request from the public: and

3. to distribute a copy of a work to the general public or a large number of specific persons.

Article 3. Copyright

1. The copyrights of the Source Code shall be owned by Ken Sakamura.

Article 4. License of Source Code

1. As provided for in this Article. T-Engine Forum shall provide. and grant a license to use, the Source Code free of charge to any person who has taken the necessary procedure for registration as prescribed by T-Engine Forum and agreed to the T-License.

2. The Source Code shall be distributed exclusively by T-Engine Forum. Any person who obtains the Source Code under Article 4.1 above shall not make any re-Distribution of the Source Code.

3. In accordance with the license granted under Article 4.1 above, the Source Code User may perform the following acts:

1. to copy and/or modify the Source Code provided by T-Engine Forum hereunder for its own research, development and the like.

2. to run the Source Code provided by T-Engine Forum hereunder for its own research, development and the like.

3. to run the Source Code modified in accordance with the provision of Article 4.3 (1) above for its own research, development and the like.

4. to distribute the Binary Code created from the Source Code provided by T-Engine Forum hereunder or from the Source Code modified in accordance with the provision of Article 4.3 (1) above.

4. In accordance with the license granted under Article 4.1 above, the System Developer may perform the following acts:

1. to perform any and all acts set forth in the Article 4.3 above.

2. to develop and manufacture the Embedded Product containing the Binary Code, and, whether with or without payment, provide the End User with the same and make the Binary Code available to the End User on the Embedded Product.

5. The Source Code User and the System Developer shall be obligated to give a notice that the Source Code is used, in such a way as separately specified by T-Engine Forum, when they use the Source Code or the Binary Code, or make the Binary Code available for the End User on the Embedded Product.

Article 5. Distribution of Modified Source Code

1. Any of A- members of T-Engine Forum may become the Distributor of Modification by obtaining the approval of T-Engine Forum through the registration procedure as prescribed by the Forum provided that only the department of the A- member which has taken the registration procedure may distribute the Modified Source Code in such a way as provided for in this Article as long as it holds the Amembership.

2. The Distributor of Modification may create the Modified Source Code based on the Source Code provided by T-Engine Forum and the Patch for Modification to be applied to create such Modified Source Code from the Source Code.

3. The Distributor of Modification shall, prior to the distribution, inform T-Engine Forum of and register a name and description of the Modified Source Code in such a way as specified by T-Engine Forum.

4. The Distributor of Modification shall determine the name of the Modified Source Code subject to the rules separately established by T-Engine Forum and publish an appropriate notice as required by the rules on the Patch for Modification and the Modified Source Code.

5. The Distributor of Modification may distribute the Modified Source Code to a third party, whether with or without payment, provided that the Distributor of Modification shall take the necessary measures to prohibit the third party from making the re-Distribution of the Modified Source Code.

6. Developer with the Patch for Modification. Provided. however, that the Distributor of Modification shall be obligated to confirm that the System Developer is the Source Code User duly licensed under Article 4.1.

7. The Distributor of Modification may perform the Vicarious Execution of Patch Processing for the System Developer.

8. The System Developer shall not distribute the Modified Source Code in further modified form to any third party as a stand-alone software product.

9. The System Developer may. under the same obligation as imposed in Article 4.5, make the Embedded Product available for the End User through use of the Patch for Modification distributed by the Distributor of Modification or the Derivative Works obtained through the Vicarious Execution of Patch Processing.

Article 6. Distribution and Registration of the Ported Source Code

1. The Source Code User and the System Developer may, whether with or without charge, distribute to any third party only the following parts of the Ported Source Code on the T-Engine Hardware or the Similar Hardware to T-Engine Hardware:

1. The Hardware-dependent Part and/or Compiler-dependent Part: provided that the Source Code User and the System Developer shall inform T-Engine Forum of, and T-Engine Forum may publish, a method for distributing said Part(s) to third parties.

2. The Header File; provided that the Header File shall be distributed together with the Binary Code of the Ported Source Code.

2. Any member of T-Engine Forum may request T-Engine Forum to register and distribute, as an original source code for T-Kernel, the Ported Source Code on the T-Engine Hardware or the Similar Hardware to T-Engine Hardware.

3. Any member of T-Engine Forum who requests the distribution mentioned in the preceding paragraph shall accede to the following conditions:

1. The member shall confirm that the object hardware is the T-Engine Hardware or the Similar Hardware to T-Engine Hardware.

2. The member shall provide T-Engine Forum with a complete set of operational environment for the object hardware and T-Kernel free of charge when requesting the distribution.

3. The member shall submit test results of the Ported Source Code to T-Engine Forum when requesting the distribution.

4. In the event that T-Engine Forum accepts the request mentioned in Article 6.2, T-Engine Forum shall register and distribute the Ported Source Code as the Source Code for T-Kernel. Provided, however. that the Ported Source Code may be treated in the same way as the Modified Source Code until the time of registration hereunder.

5. The provision set forth in Article 3 shall apply to the Ported Source Code registered in accordance with this Article.

Article 7. Use for Other Purpose

1. Any use of the Source Code, the Modified Source Code or the Ported Source Code other than those stipulated in Articles 4. 5 and 6 shall be subject to the prior approval of T-Engine Forum.

Article 8. Limited Warranty

1. T-Engine Forum and the copyright holder of the Source Code warrant that the Source Code does not infringe third party's copyrights. Provided, however, that T-Engine Forum and the copyright holder of the Source Code make no warranty as to the Hardware-dependent Part and/or Compiler- dependent Part set forth in Article 6.2 in the Ported Source Code by any third party.

2. Neither T-Engine Forum nor the copyright holder of the Source Code warrants that the Source Code will fit for any particular purpose of the Source Code User.

3. Neither T-Engine Forum nor the copyright holder of the Source Code warrants that the Source Code does not infringe any third party's industrial property rights. In no event shall T-Engine Forum and the copyright holder of the Source Code be liable for any dispute which may arise between the Source Code User and a third party in connection with the third party's industrial property rights.

Article 9. Indemnity

1. Neither T-Engine Forum nor the copyright holder of the Source Code shall be liable for any damages (including, but not limited to, damages resulting from loss of profit, business interruption, loss of business information or any other pecuniary damage) arising out of use or impossibility of use of the Source Code, even if T-Engine Forum and the copyright holder have been informed of the possibility of such damages.

Article 10. Breach of Agreement

1. In case that T-Engine Forum considers that this License Agreement is breached or that the popularization of T-Kernel is obstructed, T-Engine Forum shall take measures to correct such breach or such obstruction, take measures on the ground of copyright infringement, or take any other necessary measures against the breaching person or the obstructing person, regardless of whether or not the said person is a member of T-Engine Forum.

2. In case of breach of this License Agreement by a member of T-Engine Forum. T-Engine Forum may take appropriate measures against the member; for example, the member is disqualified from membership, depending on what kind of breach has been committed by it.

3. Any legal dispute which may arise in relation to any breach of this License Agreement shall be subject to the exclusive jurisdiction of the Tokyo District Court.

Article 11. Governing Law and Language

1. This License Agreement shall be governed by and interpreted under the laws of Japan.

2. This License Agreement is executed in both Japanese text and English text provided that the Japanese text shall govern the interpretation and performance of this Licence Agreement.

Apache License 2.0

Component	Name License	URL
mDNSResponder_bonjour	Apache License 2.0	http://www.apache.org/licenses/LICENSE-2.0

TERMS AND CONDITIONS FOR USE, REPRODUCTION, AND DISTRIBUTION

1. Definitions.

"License" shall mean the terms and conditions for use, reproduction. and distribution as defined by Sections 1 through 9 of this document.

"Licensor" shall mean the copyright owner or entity authorized by the copyright owner that is granting the License.

"Legal Entity" shall mean the union of the acting entity and all other entities that control, are controlled by, or are under common control with that entity. For the purposes of this definition, "control" means (i) the power, direct or indirect, to cause the direction or management of such entity, whether by contract or otherwise, or (ii) ownership of fifty percent (50%) or more of the outstanding shares, or (iii) beneficial ownership of such entity.

"You" (or "Your") shall mean an individual or Legal Entity exercising permissions granted by this License. "Source" form shall mean the preferred form for making modifications, including but not limited to software source code, documentation source, and configuration files.

"Object" form shall mean any form resulting from mechanical transformation or translation of a Source form, including but not limited to compiled object code, generated documentation, and conversions to other media types.

"Work" shall mean the work of authorship, whether in Source or Object form, made available under the License, as indicated by a copyright notice that is included in or attached to the work (an example is provided in the Appendix below).

"Derivative Works" shall mean any work, whether in Source or Object form, that is based on (or derived from) the Work and for which the editorial revisions, annotations, elaborations, or other modifications represent, as a whole, an original work of authorship. For the purposes of this License, Derivative Works shall not include works that remain separable from, or merely link (or bind by name) to the interfaces of, the Work and Derivative Works thereof.

"Contribution" shall mean any work of authorship, including the original version of the Work and any modifications or additions to that Work or Derivative Works thereof, that is intentionally submitted to Licensor for inclusion in the Work by the copyright owner or by an individual or Legal Entity authorized to submit on behalf of the copyright owner. For the purposes of this definition, "submitted" means any form of electronic, verbal, or written communication sent to the Licensor or its representatives, including but not limited to communication on electronic mailing lists, source code control systems, and issue tracking systems that are managed by, or on behalf of, the Licensor for the purpose of discussing and improving the Work, but excluding communication that is conspicuously marked or otherwise designated in writing by the copyright owner as "Not a Contribution." "Contributor" shall mean Licensor and any individual or Legal Entity on behalf of whom a Contribution has been received by Licensor and subsequently incorporated within the Work.

2. Grant of Copyright License. Subject to the terms and conditions of this License, each Contributor hereby grants to You a perpetual, worldwide, non-exclusive, no-charge, royalty-free, irrevocable copyright license to reproduce, prepare Derivative Works of, publicly display, publicly perform, sublicense, and distribute the Work and such Derivative Works in Source or Object form.

3. Grant of Patent License. Subject to the terms and conditions of this License, each Contributor hereby grants to You a perpetual, worldwide, non-exclusive, no-charge, royalty-free, irrevocable (except as stated in this section) patent license to make, have made, use, offer to sell, sell, import, and otherwise transfer the Work, where such license applies only to those patent claims licensable by such Contributor that are necessarily infringed by their Contribution(s) alone or by combination of their Contribution(s) with the Work to which such Contribution(s) was submitted. If You institute patent litigation against any entity (including a cross-claim or counterclaim in a lawsuit) alleging that the Work or a Contribution incorporated within the Work constitutes direct or contributory patent infringement, then any patent licenses granted to You under this License for that Work shall terminate as of the date such litigation is filed.

4. Redistribution. You may reproduce and distribute copies of the Work or Derivative Works thereof in any medium, with or without modifications, and in Source or Object form, provided that You meet the following conditions:

(a) You must give any other recipients of the Work or Derivative Works a copy of this License; and

(b) You must cause any modified files to carry prominent notices stating that You changed the files; and

(c) You must retain, in the Source form of any Derivative Works that You distribute, all copyright, patent, trademark, and attribution notices from the Source form of the Work, excluding those notices that do not pertain to any part of the Derivative Works; and

(d) If the Work includes a "NOTICE" text file as part of its distribution, then any Derivative Works that You distribute must include a readable copy of the attribution notices contained within such NOTICE file, excluding those notices that do not pertain to any part of the Derivative Works, in at least one of the following places: within a NOTICE text file distributed as part of the Derivative Works; within the Source form or documentation, if provided along with the Derivative Works; or, within a display generated by the Derivative Works, if and wherever such third-party notices normally appear. The contents of the NOTICE file are for informational purposes only and do not modify the License. You may add Your own attribution notices within Derivative Works that You distribute, alongside or as an addendum to the NOTICE text from the Work, provided that such additional attribution notices cannot be construed as modifying the License.

You may add Your own copyright statement to Your modifications and may provide additional or different license terms and conditions for use, reproduction, or distribution of Your modifications, or for any such Derivative Works as a whole, provided Your use, reproduction, and distribution of the Work otherwise complies with the conditions stated in this License.

5. Submission of Contributions. Unless You explicitly state otherwise, any Contribution intentionally submitted for inclusion in the Work by You to the Licensor shall be under the terms and conditions of this License, without any additional terms or conditions. Notwithstanding the above, nothing herein shall supersede or modify the terms of any separate license agreement you may have executed with Licensor regarding such Contributions.

6. Trademarks. This License does not grant permission to use the trade names, trademarks, service marks, or product names of the Licensor, except as required for reasonable and customary use in describing the origin of the Work and reproducing the content of the NOTICE file.

7. Disclaimer of Warranty. Unless required by applicable law or agreed to in writing, Licensor provides the Work (and each Contributor provides its Contributions) on an "AS IS" BASIS, WITHOUT WARRANTIES OR CONDITIONS OF ANY KIND, either express or implied, including, without limitation, any warranties or conditions of TITLE, NON-INFRINGEMENT, MERCHANTABILITY, or FITNESS FOR A PARTICULAR PURPOSE. You are solely responsible for determining the appropriateness of using or redistributing the Work and assume any risks associated with Your exercise of permissions under this License.

8. Limitation of Liability. In no event and under no legal theory, whether in tort (including negligence), contract, or otherwise, unless required by applicable law (such as deliberate and grossly negligent acts) or agreed to in writing, shall any Contributor be liable to You for damages, including any direct, indirect, special, incidental, or consequential damages of any character arising as a result of this License or out of the use or inability to use the Work (including but not limited to damages for loss of goodwill, work stoppage, computer failure or malfunction, or any and all other commercial damages or losses), even if such Contributor has been advised of the possibility of such damages.

9. Accepting Warranty or Additional Liability. While redistributing the Work or Derivative Works thereof, You may choose to offer, and charge a fee for, acceptance of support, warranty, indemnity, or other liability obligations and/or rights consistent with this License. However, in accepting such obligations, You may act only on Your own behalf and on Your sole responsibility, not on behalf of any other Contributor, and only if You agree to indemnify, defend, and hold each Contributor harmless for any liability incurred by, or claims asserted against, such Contributor by reason of your accepting any such warranty or additional liability.

END OF TERMS AND CONDITIONS

APPENDIX: How to apply the Apache License to your work.

To apply the Apache License to your work, attach the following boilerplate notice, with the fields enclosed by brackets "[]" replaced with your own identifying information. (Don't include the brackets!) The text should be enclosed in the appropriate comment syntax for the file format. We also recommend that a file or class name and description of purpose be included on the same "printed page" as the copyright notice for easier identification within third-party archives.

Copyright [yyyy] [name of copyright owner]

Licensed under the Apache License, Version 2.0 (the "License"); you may not use this file except in compliance with the License. You may obtain a copy of the License at http://www.apache.org/licenses/LICENSE-2.0

Unless required by applicable law or agreed to in writing, software distributed under the License is distributed on an "AS IS" BASIS, WITHOUT WARRANTIES OR CONDITIONS OF ANY KIND, either express or implied. See the License for the specific language governing permissions and limitations under the License.

BZip2 License

This program, "bzip2", the associated library "libbzip2", and all documentation, are copyright (C) 1996-2007 Julian R Seward. All rights reserved.

Component Name	License	URL
bzip2-1.0.6	Bzip2	http://www.bzip.org/

Redistribution and use in source and binary forms, with or without modification, are permitted provided that the following conditions are met:

1. Redistributions of source code must retain the above copyright notice, this list of conditions and the following disclaimer.

2. The origin of this software must not be misrepresented; you must not claim that you wrote the original software. If you use this software in a product, an acknowledgment in the product documentation would be appreciated but is not required.

3. Altered source versions must be plainly marked as such, and must not be misrepresented as being the original software.

4. The name of the author may not be used to endorse or promote products derived from this software without specific prior written permission.

THIS SOFTWARE IS PROVIDED BY THE AUTHOR "AS IS" AND ANY EXPRESS OR IMPLIED WARRANTIES, INCLUDING, BUT NOT LIMITED TO, THE IMPLIED WARRANTIES OF MERCHANTABILITY AND FITNESS FOR A PARTICULAR PURPOSE ARE DISCLAIMED. IN NO EVENT SHALL THE AUTHOR BE LIABLE FOR ANY DIRECT, INDIRECT, INCIDENTAL, SPECIAL, EXEMPLARY, OR CONSEQUENTIAL DAMAGES (INCLUDING, BUT NOT LIMITED TO, PROCUREMENT OF SUBSTITUTE GOODS OR SERVICES; LOSS OF USE, DATA, OR PROFITS; OR BUSINESS INTERRUPTION) HOWEVER CAUSED AND ON ANY THEORY OF LIABILITY, WHETHER IN CONTRACT, STRICT LIABILITY, OR TORT (INCLUDING NEGLIGENCE OR OTHERWISE) ARISING IN ANY WAY OUT OF THE USE OF THIS SOFTWARE, EVEN IF ADVISED OF THE POSSIBILITY OF SUCH DAMAGE.

Julian Seward, jseward@bzip.org

bzip2/libbzip2 version 1.0.5 of 10 December 2007

University of Illinois / NCSA Open Source License

Copyright (c) 1999-2007, The Board of Trustees of the University of Illinois All Rights Reserved.

Component Name	License
iperf-2.0.5	University of Illinois / NCSA Open Source

Iperf performance test

Mark Gates

Ajay Tirumala

Jim Ferguson

Jon Dugan

Feng Qin

Kevin Gibbs

John Estabrook

National Laboratory for Applied Network Research

National Center for Supercomputing Applications

University of Illinois at Urbana-Champaign

http://www.ncsa.uiuc.edu

Permission is hereby granted, free of charge, to any person obtaining a copy of this software (Iperf) and associated documentation files (the "Software"), to deal in the Software without restriction, including without limitation the rights to use, copy, modify, merge, publish, distribute, sublicense, and/or sell copies of the Software, and to permit persons to whom the Software is furnished to do so, subject to the following conditions:

Redistributions of source code must retain the above copyright notice, this list of conditions and the following disclaimers.

Redistributions in binary form must reproduce the above copyright notice, this list of conditions and the following disclaimers in the documentation and/or other materials provided with the distribution.

Neither the names of the University of Illinois, NCSA, nor the names of its contributors may be used to endorse or promote products derived from this Software without specific prior written permission. THE SOFTWARE IS PROVIDED "AS IS", WITHOUT WARRANTY OF ANY KIND, EXPRESS OR IMPLIED, INCLUDING BUT NOT LIMITED TO THE WARRANTIES OF MERCHANTABILITY, FITNESS FOR A PARTICULAR PURPOSE AND NONINFRINGEMENT. IN NO EVENT SHALL THE CONTIBUTORS OR COPYRIGHT HOLDERS BE LIABLE FOR ANY CLAIM, DAMAGES OR OTHER LIABILITY, WHETHER IN AN ACTION OF CONTRACT, TORT OR OTHERWISE, ARISING FROM, OUT OF OR IN CONNECTION WITH THE SOFTWARE OR THE USE OR OTHER DEALINGS IN THE SOFTWARE.

PHP 3.01 License

The PHP License, version 3.01 Copyright (c) 1999 - 2010 The PHP Group. All rights reserved.

Component Name	License	URL
php-5.2.17	PHP 3.01	http://www.php.net/distributions

Redistribution and use in source and binary forms, with or without modification, is permitted provided that the following conditions are met:

1. Redistributions of source code must retain the above copyright notice, this list of conditions and the following disclaimer.
2. Redistributions in binary form must reproduce the above copyright notice, this list of conditions and the following disclaimer in the documentation and/or other materials provided with the distribution.
3. The name "PHP" must not be used to endorse or promote products derived from this software without prior written permission. For written permission, please contact group@php.net.
4. Products derived from this software may not be called "PHP", nor may "PHP" appear in their name, without prior written permission from group@php.net. You may indicate that your software works in conjunction with PHP by saying "Foo for PHP" instead of calling it "PHP Foo" or "phpfoo"
5. The PHP Group may publish revised and/or new versions of the license from time to time. Each version will be given a distinguishing version number. Once covered code has been published under a particular version of the license, you may always continue to use it under the terms of that version. You may also choose to use such covered code under the terms of any subsequent version of the license published by the PHP Group. No one other than the PHP Group has the right to modify the terms applicable to covered code created under this License.
6. Redistributions of any form whatsoever must retain the following acknowledgment: "This product includes PHP software, freely available from <http://www.php.net/software/>".

THIS SOFTWARE IS PROVIDED BY THE PHP DEVELOPMENT TEAM "AS IS" AND ANY EXPRESSED OR IMPLIED WARRANTIES, INCLUDING, BUT NOT LIMITED TO, THE IMPLIED WARRANTIES OF MERCHANTABILITY AND FITNESS FOR A PARTICULAR PURPOSE ARE DISCLAIMED. IN NO EVENT SHALL THE PHP DEVELOPMENT TEAM OR ITS CONTRIBUTORS BE LIABLE FOR ANY DIRECT, INDIRECT, INCIDENTAL, SPECIAL, EXEMPLARY, OR CONSEQUENTIAL DAMAGES (INCLUDING, BUT NOT LIMITED TO, PROCUREMENT OF SUBSTITUTE GOODS OR SERVICES; LOSS OF USE, DATA, OR PROFITS; OR BUSINESS INTERRUPTION) HOWEVER CAUSED AND ON ANY THEORY OF LIABILITY, WHETHER IN CONTRACT, STRICT LIABILITY, OR TORT (INCLUDING NEGLIGENCE OR OTHERWISE) ARISING IN ANY WAY OUT OF THE USE OF THIS SOFTWARE, EVEN IF ADVISED OF THE POSSIBILITY OF SUCH DAMAGE.

This software consists of voluntary contributions made by many individuals on behalf of the PHP Group. The PHP Group can be contacted via Email at group@php.net.

For more information on the PHP Group and the PHP project, please see <http://www.php.net>. PHP includes the Zend Engine, freely available at <http://www.zend.com>.

zlib / libpng License

This software is provided 'as-is', without any express or implied warranty. In no event will the authors be held liable for any damages arising from the use of this software.

Component Name	License	URL
zlib-1.2.8	zlib / libpng	http://zlib.net/

Copyright (C) 1995-2010 Jean-loup Gailly and Mark Adler

Permission is granted to anyone to use this software for any purpose, including commercial applications, and to alter it and redistribute it freely, subject to the following restrictions:

1. The origin of this software must not be misrepresented; you must not claim that you wrote the original software. If you use this software in a product, an acknowledgment in the product documentation would be appreciated but is not required.
2. Altered source versions must be plainly marked as such, and must not be misrepresented as being the original software.
3. This notice may not be removed or altered from any source distribution.

Jean-loup Gailly Mark Adler

jloup@gzip.org madler@alumni.caltech.edu

The data format used by the zlib library is described by RFCs (Request for Comments) 1950 to 1952 in the files http://www.ietf.org/rfc/rfc1950.txt (zlib format), rfc1951.txt (deflate format) and rfc1952.txt (gzip format).

Any changes or modifications in construction of this device which are not expressly approved by the party responsible for compliance could void the user's authority to operate the equipment.

This device complies with part 15 of the FCC Rules. Operation is subject to the following two conditions: (1) This device may not cause harmful interference, and (2) this device must accept any interference received, including interference that may cause undesired operation.

This equipment has been tested and found to comply with the limits for a Class A digital device, pursuant to part 15 of the FCC Rules. These limits are designed to provide reasonable protection against harmful interference when the equipment is operated in a commercial environment.
This equipment generates, uses, and can radiate radio frequency energy and, if not installed and used in accordance with the instruction manual, may cause harmful interference to radio communications. Operation of this equipment in a residential area is likely to cause harmful interference in which case the user will be required to correct the interference at his own expense.

Hanwha Techwin cares for the environment at all product manufacturing stages, and is taking measures to provide customers with more environmentally friendly products.
The Eco mark represents Hanwha Techwin's devotion to creating environmentally friendly products, and indicates that the product satisfies the EU RoHS Directive.

Correct Disposal of This Product (Waste Electrical & Electronic Equipment)

(Applicable in the European Union and other European countries with separate collection systems)

This marking on the product, accessories or literature indicates that the product and its electronic accessories (e.g. charger, headset, USB cable) should not be disposed of with other household waste at the end of their working life. To prevent possible harm to the environment or human health from uncontrolled waste disposal, please separate these items from other types of waste and recycle them responsibly to promote the sustainable reuse of material resources.
Household users should contact either the retailer where they purchased this product, or their local government office, for details of where and how they can take these items for environmentally safe recycling.
Business users should contact their supplier and check the terms and conditions of the purchase contract. This product and its electronic accessories should not be mixed with other commercial wastes for disposal.

Correct disposal of batteries in this product

(Applicable in the European Union and other European countries with separate battery return systems.)

This marking on the battery, manual or packaging indicates that the batteries in this product should not be disposed of with other household waste at the end of their working life. Where marked, the chemical symbols Hg, Cd or Pb indicate that the battery contains mercury, cadmium or lead above the reference levels in EC Directive 2006/66. If batteries are not properly disposed of, these substances can cause harm to human health or the environment.
To protect natural resources and to promote material reuse, please separate batteries from other types of waste and recycle them through your local, free battery return system.

Head Office
6, Pangyo-ro 319 beon-gil, Bundang-gu, Seongnam-si,
Gyeonggi-do, 463-400 Rep. of KOREA
Tel : +82.70.7147.8753 Fax : +82.31.8018.3740
www.hanwha-security.com

Hanwha Techwin America
500 Frank W. Burr Blvd. Suite 43 Teaneck, NJ 07666
Toll Free +1.877.213.1222 Direct +1.201.325.6920
Fax +1.201.373.0124
www.hanwha-security.com

Hanwha Techwin Europe
Heriot House, Heriot Road, Chertsey, Surrey, KT16 9DT, United Kingdom
Tel +44.1932.57.8100 Fax +44.1932.57.8101
www.hanwha-security.eu

Hanwha
Techwin

WISENET

NETWORK CAMERA

User Manual

QND-6012R/6022R/6032R/6072R/6082R
QNV-6012R/6022R/6032R/6072R/6082R
QNO-6012R/6022R/6032R/6072R/6082R

CE

Network Camera

User Manual

Copyright

©2019 Hanwha Techwin Co., Ltd. All rights reserved.

Trademark

Each of trademarks herein is registered. The name of this product and other trademarks mentioned in this manual are the registered trademark of their respective company.

Restriction

Copyright of this document is reserved. Under no circumstances, this document shall be reproduced, distributed or changed, partially or wholly, without formal authorization.

Disclaimer

Hanwha Techwin makes the best to verify the integrity and correctness of the contents in this document, but no formal guarantee shall be provided. Use of this document and the subsequent results shall be entirely on the user's own responsibility. Hanwha Techwin reserves the right to change the contents of this document without prior notice.

✧ Design and specifications are subject to change without prior notice.

✧ The initial administrator ID is "admin" and the password should be set when logging in for the first time.
Please change your password every three months to safely protect personal information and to prevent the damage of the information theft.
Please, take note that it's a user's responsibility for the security and any other problems caused by mismanaging a password.

IMPORTANT SAFETY INSTRUCTIONS

1. Read these instructions.
2. Keep these instructions.
3. Heed all warnings.
4. Follow all instructions.
5. Do not use this apparatus near water.
6. Clean the contaminated area on the product surface with a soft, dry cloth or a damp cloth.
   (Do not use a detergent or cosmetic products that contain alcohol, solvents or surfactants or oil constituents as they may deform or cause damage to the product.)
7. Do not block any ventilation openings, Install in accordance with the manufacturer's instructions.
8. Do not install near any heat sources such as radiators, heat registers, stoves, or other apparatus (including amplifiers) that produce heat.
9. Do not defeat the safety purpose of the polarized or grounding-type plug. A polarized plug has two blades with one wider than the other. A grounding type plug has two blades and a third grounding prong. The wide blade or the third prong are provided for your safety. If the provided plug does not fit into your outlet, consult an electrician for replacement of the obsolete outlet.
10. Protect the power cord from being walked on or pinched particularly at plugs, convenience receptacles, and the point where they exit from the apparatus.
11. Only use attachments/ accessories specified by the manufacturer.
12. Use only with the cart, stand, tripod, bracket, or table specified by the manufacturer, or sold with the apparatus. When a cart is used, use caution when moving the cart/ apparatus combination to avoid injury from tip-over.

13. Unplug this apparatus during lighting storms or when unused for long periods of time.
14. Refer all servicing to qualified service personnel. Servicing is required when the apparatus has been damaged in any way, such as power-supply cord or plug is damaged, liquid has been spilled or objects have fallen into the apparatus, the apparatus has been exposed to rain or moisture, does not operate normally, or has been dropped.
15. This product is intended to be a Listed Power Supply Unit marked "Class2" or "LPS" and rated from 12Vdc, 0.55A or PoE(48V), 0.16A. (QND-6072R/6082R, QNV-6072R/6082R)
16. This product is intended to be a Listed Power Supply Unit marked "Class2" or "LPS" and rated from 12Vdc, 0.54A or PoE(48V), 0.16A. (QND-6012R/6022R/6032R, QNV-6012R/6022R/6032R)
17. This product is intended to be a Listed Power Supply Unit marked "Class2" or "LPS" and rated from 12Vdc, 0.55A or PoE(48V), 0.16A. (QNO-6072R/6082R)
18. This product is intended to be a Listed Power Supply Unit marked "Class2" or "LPS" and rated from 12Vdc, 0.51A or PoE(48V), 0.15A. (QNO-6012R/6022R/6032R)
19. This product is intended to be supplied by isolation power.
20. If you use excessive force when installing the product, the camera may be damaged and malfunction.
    If you forcibly install the product using non-compliant tools, the product may be damaged.
21. Do not install the product in a place where chemical substances or oil mist exists or may be generated. As edible oils such as soybean oil may damage or warp the product, do not install the product in the kitchen or near the kitchen table.
    This may cause damage to the product.
22. When installing the product, be careful not to allow the surface of the product to be stained with chemical substance.
    Some chemical solvents such as cleaner or adhesives may cause serious damage to the product's surface.
23. If you install/disassemble the product in a manner that has not been recommended, the production functions/ performance may not be guaranteed.
    Install the product by referring to "Installation & connection" in the user manual.
24. Installing or using the product in water can cause serious damage to the product.
25. Although a rapid change in temperature could cause frost inside the dome, there will be no problem with the video.

WARNING

TO REDUCE THE RISK OF FIRE OR ELECTRIC SHOCK, DO NOT EXPOSE THIS PRODUCT TO RAIN OR MOISTURE. DO NOT INSERT ANY METALLIC OBJECT THROUGH THE VENTILATION GRILLS OR OTHER OPENNINGS ON THE EQUIPMENT.

Apparatus shall not be exposed to dripping or splashing and that no objects filled with liquids, such as vases, shall be placed on the apparatus.

To prevent injury, this apparatus must be securely attached to the Wall/ceiling in accordance with the installation instructions.

CAUTION

CAUTION

RISK OF ELECTRIC SHOCK.
DO NOT OPEN

CAUTION : TO REDUCE THE RISK OF ELECTRIC SHOCK.
DO NOT REMOVE COVER (OR BACK).
NO USER SERVICEABLE PARTS INSIDE.
REFER SERVICING TO QUALIFIED SERVICE PERSONNEL.

EXPLANATION OF GRAPHICAL SYMBOLS

The lightning flash with arrowhead symbol, within an equilateral triangle, is intended to alert the user to the presence of "dangerous voltage" within the product's enclosure that may be of sufficient magnitude to constitute a risk of electric shock to persons.

The exclamation point within an equilateral triangle is intended to alert the user to the presence of important operating and maintenance (servicing) instructions in the literature accompanying the product.

overview

Class I construction

An apparatus with CLASS I construction shall be connected to a MAINS socket outlet with a protective earthing connection.

Battery

Batteries(battery pack or batteries installed) shall not be exposed to excessive heat such as sunshine, fire or the like.

The battery cannot be replaced.

Disconnection Device

Disconnect the main plug from the apparatus, if it's defected. And please call a repair man in your location.

When used outside of the U.S., it may be used HAR code with fittings of an approved agency is employed.

CAUTION

RISK OF EXPLOSION IF BATTERY IS REPLACED BY AN INCORRECT TYPE.
DISPOSE OF USED BATTERIES ACCORDING TO THE INSTRUCTIONS.

ATTENTION

IL Y A RISQUE D'EXPLOSION SI LA BATTERIE EST REMPLACÉE PAR UNE BATTERIE DE TYPE INCORRECT.
METTRE AU REBUT LES BATTERIES USAGÉES CONFORMÉMENT AUX INSTRUCTIONS.

These servicing instructions are for use by qualified service personnel only.
To reduce the risk of electric shock do not perform any servicing other than that contained in the operating instructions unless you are qualified to do so.

Please use the input power with just one camera and other devices must not be connected.

The ITE is to be connected only to PoE networks without routing to the outside plant.

The wired LAN hub providing power over the Ethernet (PoE) in accordance with IEEE 802-3af shall be a UL Listed device with the output evaluated as a Limited Power Source as defined in UL60950-1.

Unit is intended for installation in a Network Environment 0 as defined in IEC TR 62102. As such, associated Ethernet wiring shall be limited to inside the building.

Please read the following recommended safety precautions carefully.

- Do not place this apparatus on an uneven surface.
- Do not install on a surface where it is exposed to direct sunlight, near heating equipment or heavy cold area.
- Do not place this apparatus near conductive material.
- Do not attempt to service this apparatus yourself.
- Do not place a glass of water on the product.
- Do not install near any magnetic sources.
- Do not block any ventilation openings.
- Do not place heavy items on the product.
- Please wear protective gloves when installing/removing the camera.
  The high temperature of the product surface may cause a burn.

User's Manual is a guidance book for how to use the products.

The meaning of the symbols are shown below.

- Reference : In case of providing information for helping of product's usages
- Notice : If there's any possibility to occur any damages for the goods and human caused by not following the instruction

※ Please read this manual for the safety before using of goods and keep it in the safe place.

WARNING

To Prevent damage which may caused by IR LED, don't stare at operating lamp.

For below models only.

QND-6012R/6022R/6032R/6072R/6082R
QNV-6012R/6022R/6032R/6072R/6082R
QNO-6012R/6022R/6032R/6072R/6082R

Risk Group 1
WARNING IR emitted from this product. **Do not stare at operating lamp.**
Product tested against IEC 62471

CONTENTS

OVERVIEW 3

3 Important Safety Instructions
6 Product Features
6 Recommended PC Specifications
6 Recommended Micro SD/SDHC/SDXC Memory Card Specifications
6 NAS recommended specs
7 What's Included
8 At a Glance (QND-6012R/6022R/6032R)
10 At a Glance (QND-6072R/6082R)
12 At a Glance (QNO-6012R/6022R/6032R/6072R/6082R)
14 At a Glance (QNV-6012R/6022R/6032R/6072R/6082R)

INSTALLATION & CONNECTION 16

16 Installation (QND-6012R/6022R/6032R/6072R/6082R)
17 Installation (QNO-6012R/6022R/6032R/6072R/6082R)
18 Installation (QNV-6012R/6022R/6032R)
20 Installation (QNV-6072R/6082R)
23 Inserting/Removing a Micro SD Memory Card
27 Powering and networking

NETWORK CONNECTION AND SETUP 31

31 Connecting the Camera Directly to Local Area Networking
31 Connecting the Camera Directly to a DHCP Based DSL/Cable Modem
32 Buttons used in IP Installer
32 Static IP Setup
34 Dynamic IP Setup
34 Port Range Forward (Port Mapping) Setup
35 Connecting to the Camera from a Shared Local PC
35 Connecting to the Camera from a Remote PC via the Internet

WEB VIEWER 36

36 Connecting to the Camera
37 Password setting
37 Login
37 Camera Web Viewer Setup

APPENDIX 38

38 Specification (QND-6012R/6022R/6032R, QNV-6012R/6022R/6032R, QNO-6012R/6022R/6032R)
40 Specification (QND-6072R/6082R, QNV-6072R/6082R, QNO-6072R/6082R)
42 Product Overview (QND-6012R/6022R/6032R/6072R/6082R)
43 Product Overview (QNO-6012R/6022R/6032R/6072R/6082R)
44 Product Overview (QNV-6012R/6022R/6032R/6072R/6082R)
45 Troubleshooting
46 Open Source Announcement

overview

PRODUCT FEATURES

- **Dustproof/Waterproof (IP66) (QNV-6012R/6022R/6032R/6072R/6082R, QNO-6012R/6022R/6032R/6072R/6082R)**
  The dustproof and waterproof design makes you feel at ease when installing the product outdoors or exposing it to rain.
- **IR mode**
  If the IR indicator turns on, the product switches to the IR mode for preventing an object from being too bright, which helps you identify the object in near distance.
- **Supports 2 megapixel resolution videos**
- **Multi-Streaming**
  This network camera can display videos in different resolutions and qualities simultaneously using different CODECs.
- **Web Browser-based Monitoring**
  Using the Internet web browser to display the image in a local network environment.
- **Alarm**
  When an event occurs, video is either sent to the email address registered by the user, sent to the FTP server, saved in a Micro SD card or NAS, or a signal is sent to the alert output terminal.
- **Tampering Detection**
  Detects tempering attempts on video monitoring.
- **Defocus detection function**
  Detects the defocus phenomenon of the camera lens.
- **Motion Detection**
  Detects motion from the camera's video input.
- **Auto Detection of Disconnected Network**
  Detects network disconnection before triggering an event.
- **ONVIF Compliance**
  This product supports ONVIF Profile S&G.
  For more information, refer to www.onvif.org.

Driving network video through global standardization

RECOMMENDED PC SPECIFICATIONS

- CPU : Intel(R) Core(TM) i7 3.4 GHz or higher
- RAM : 8G or higher
- Supported OS : Windows 7, 8.1, 10, Mac OS X 10.12, 10.13, 10.14
- Recommended browser : Google Chrome
- Supported browsers : MS Explore11, MS Edge, Mozilla Firefox(Window 64bit only), Apple Safari(Mac OS X only)
- VGA : PCIe 256MB GDDR3 video graphics card or higher

※ Please see the appendix for detailed information on verified OS and browsers.

RECOMMENDED MICRO SD/SDHC/SDXC MEMORY CARD SPECIFICATIONS

- Recommended capacity : 16GB ~ 128GB(MLC type)
- Recommended Manufacturers : SanDisk, Transcend
- Product Type : High endurance
- The compatibility varies depending on the card manufacturers and types.

NAS RECOMMENDED SPECS

- Recommended capacity : 200GB or higher is recommended.
- Simultaneous access : One unit of NAS can accept a maximum of sixteen camera accesses.
- For this camera, you are recommended to use a NAS with the following manufacturer's specs.

Recommended products	Available sizes
QNAP NAS	A maximum of 16 cameras can access simultaneously.
Synology NAS	A maximum of 16 cameras can access simultaneously.

※ If you use NAS equipment for purposes other than video saving, the number of accessible cameras may be reduced.

WHAT'S INCLUDED

Please check if your camera and accessories are all included in the product package.
(As for each sales country, accessories are not the same.)

Appearance	Item Name	Quantity	Description	Model Name
	Camera	1		QND-6012R/6022R/6032R/6072R/6082R
		1		QNO-6012R/6022R/6032R/6072R/6082R
		1		QNV-6012R/6022R/6032R/6072R/6082R
	Instruction book, Installer S/W CD	1		QND-6012R/6022R/6032R/6072R/6082R, QNV-6012R/6022R/6032R/6072R/6082R, QNO-6012R/6022R/6032R/6072R/6082R
	Quick Guide (Optional)	1		QND-6012R/6022R/6032R/6072R/6082R, QNV-6012R/6022R/6032R/6072R/6082R, QNO-6012R/6022R/6032R/6072R/6082R
	Warranty card (Optional)	1		QND-6012R/6022R/6032R/6072R/6082R, QNV-6012R/6022R/6032R/6072R/6082R, QNO-6012R/6022R/6032R/6072R/6082R
	Template	1	Product installation guide	QND-6012R/6022R/6032R/6072R/6082R, QNV-6012R/6022R/6032R/6072R/6082R, QNO-6012R/6022R/6032R/6072R/6082R
	Power Terminal Block	1	Plugged in the power plug	QND-6012R/6022R/6032R/6072R/6082R, QNV-6012R/6022R/6032R/6072R/6082R

Appearance	Item Name	Quantity	Description	Model Name
	L Wrench	1	Used to control the direction of the camera	QNO-6012R/6022R/6032R/6072R/6082R
	L Wrench (star-shaped)	1	Used to remove and replace the dome cover	QNV-6012R/6022R/6032R/6072R/6082R,
	Alarm cable	1	Used when connecting to an alarm	QND-6012R/6022R/6032R/6072R/6082R
	RJ45 waterproof accessory	1	Used to install in humid places	QNO-6012R/6022R/6032R/6072R/6082R
	Sunshield	1	It protects the camera from the direct sunlight.	QNO-6012R/6022R/6032R/6072R/6082R
	Sunshield Hold	1	It fixes the sunshield with the camera.	QNO-6012R/6022R/6032R/6072R/6082R
	Card-type moisture absorbent	3	Attached when installed.	QNO-6012R/6022R/6032R/6072R/6082R
		1		QNV-6012R/6022R/6032R/6072R/6082R
	Power Cable	1	Used to plug into the power port	QND-6012R/6022R/6032R/6072R/6082R, QNV-6012R/6022R/6032R/6072R/6082R
	Audio/alarm cable	1	Used to connect with the audio and alarm port	QNV-6012R/6022R/6032R/6072R/6082R
	Cable for the testing monitor	1	Used to test the camera connection to a portable display device	QND-6012R/6022R/6032R/6072R/6082R, QNV-6012R/6022R/6032R/6072R/6082R, QNO-6012R/6022R/6032R/6072R/6082R

overview

Appearance	Item Name	Quantity	Description	Model Name
	Cable bush	1	Used to connect the LAN cable	QNV-6012R/6022R/ 6032R/6072R/6082R
	Cap Installer	1	Used when connecting RJ45 cable	QNV-6012R/6022R/ 6032R/6072R/6082R

Optional Accessories for Installation

For your easier installation, you can purchase appropriate optional accessories available.

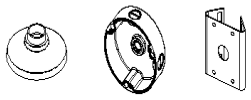

Model name	Hanging Mount	Back Box	Pole Mount	All
QNV-6012R/6022R/6032R	SBP-122HMW	SBV-120GW		SBP-300LMW (Parapet Mount)
QNV-6072R/6082R	SBP-301HMW2	SBV-136BW		SBP-300CMW (Ceiling Mount)
QND-6012R/6022R/6032R	SBP-300HMW7			SBP-300WMW1 (Wall Mount)
QND-6072R/6082R	SBP-122HMW			SBP-300NBW (Instalation Box)
QNO-6012R/6022R/ 6032R/6072R/6082R		SBO-100B1	SBP-302PM	SBP-300PMW (Pole Mount)
				SBP-300KMW (Corner Mount)

AT A GLANCE (QND-6012R/6022R/6032R)

Appearance

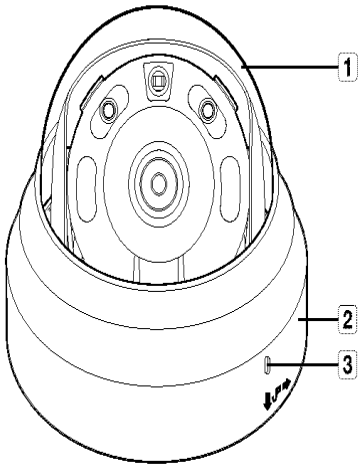

Item	Description
1 Dome cover	Case cover used to protect the lens and the main unit.
2 Camera Case	Housing part that covers the camera body.
3 Microphone hole	Microphone is embedded.

Components

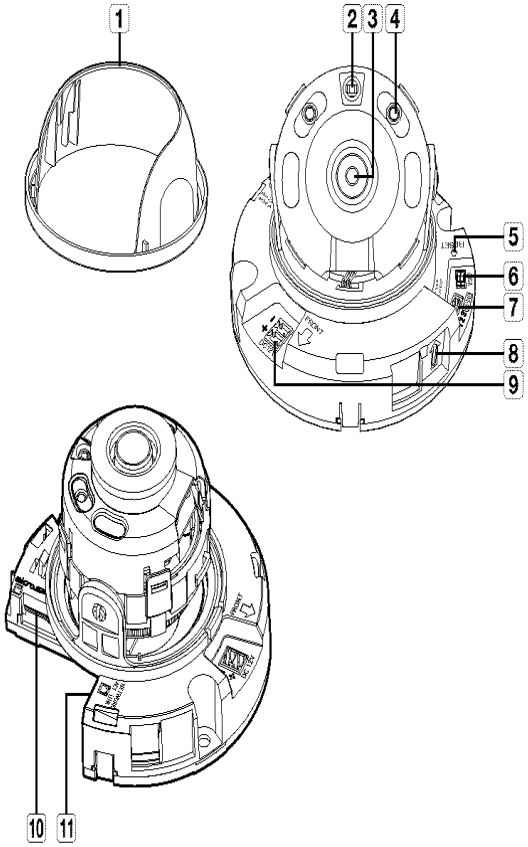

Item	Description	
1 Inside cover	Protective cover for the main body.	
2 Illumination Sensor	Detects incoming light to control the IR LED.	
3 Lens	Lens for the camera.	
4 IR LED	These infrared LED's are controlled by the illumination sensor.	
5 Reset Button	The button restores all camera settings to the factory default. Press and hold for about 5 seconds to reboot the system. If you reset the camera, the network settings will be adjusted so that DHCP can be enabled. If there is no DHCP server in the network, you must run the IP Installer program to change the basic network settings such as IP address, Subnet mask, Gateway, etc., before you can connect to the network.	
6 Test Monitor Out	Output port for test monitoring the video output. Use the test monitor cable to connect to a mobile display and check the test video.	
7 Alarm I/O Port	ARM-IN	Used to connect the alarm input sensor or external day/night sensor.
	ARM-OUT	Used to connect the alarm output signal.
	GND	These are common ports to connect alarm input/output signals.
8 Microphone hole	Microphone is embedded.	
9 Power Port	Port for power terminal block.	
10 Micro SD Memory Card Compartment	Compartment for the Micro SD memory card.	
11 Network Port	Used to connect the PoE or Ethernet cable for network connection.	

overview

AT A GLANCE (QND-6072R/6082R)

Appearance

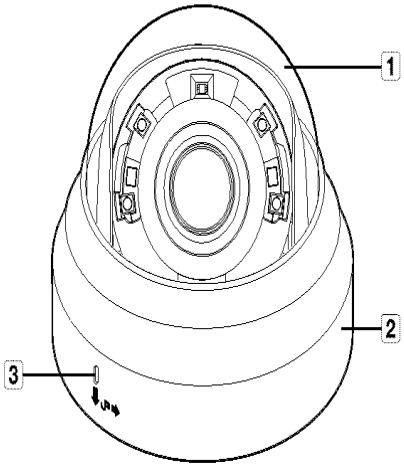

Item	Description
1 Dome cover	Case cover used to protect the lens and the main unit.
2 Camera Case	Housing part that covers the camera body.
3 Microphone hole	Microphone is embedded.

Components

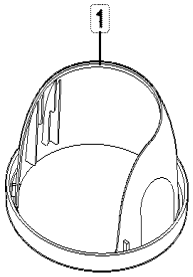

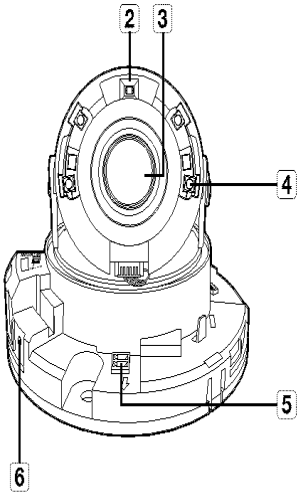

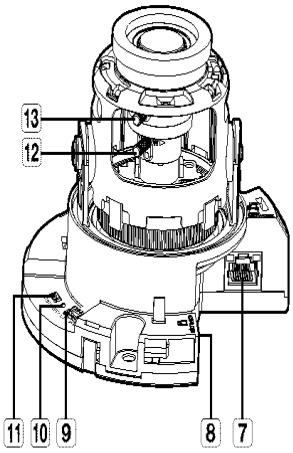

<QND-6072R>

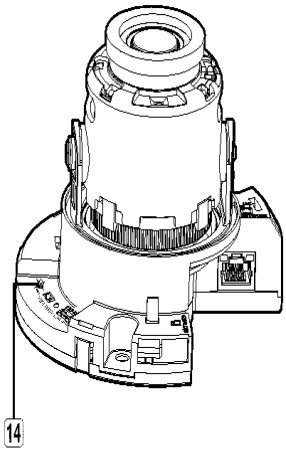

<QND-6082R>

Item	Description	
1 Inside cover	Protective cover for the main body.	
2 Illumination Sensor	Detects incoming light to control the IR LED.	
3 Lens	Lens for the camera.	
4 IR LED	These infrared LED's are controlled by the illumination sensor.	
5 Power Port	Port for power terminal block.	
6 Microphone hole	Microphone is embedded.	
7 Network Port	Used to connect the PoE or Ethernet cable for network connection.	
8 Micro SD Memory Card Compartment	Compartment for the Micro SD memory card.	
9 Alarm I/O Port	ARM-IN	Used to connect the alarm input sensor or external day/night sensor.
	ARM-OUT	Used to connect the alarm output signal.
	GND	These are common ports to connect alarm input/output signals.
10 Reset Button	The button restores all camera settings to the factory default. Press and hold for about 5 seconds to reboot the system. If you reset the camera, the network settings will be adjusted so that DHCP can be enabled. If there is no DHCP server in the network, you must run the IP Installer program to change the basic network settings such as IP address, Subnet mask, Gateway, etc., before you can connect to the network.	
11 Test Monitor Out	Output port for test monitoring the video output. Use the test monitor cable to connect to a mobile display and check the test video.	

Item	Description	
12 Zoom control lever	T	Zoom in (Tele)
	W	Zoom out (Wide)
	Release the lever and move it to left or right to zoom the lens in or out. Turn the lever clockwise to fix the adjusted position to prevent it from being moved.	
13 Focus control lever	N	Focusing on a near object (Near)
	F	Focusing on a far object (Far)
	Release the lever and move it to left or right to adjust the lens focus. Turn the lever clockwise to fix the adjusted position to prevent it from being moved.	
14 Zoom/Focus Control Button	T	Zoom in (Tele)
	W	Zoom out (Wide)
	N	Focusing on a near object (Near)
	F	Focusing on a far object (Far)
	Focus Control	Press this button for automatic focus control.

overview

AT A GLANCE (QNO-6012R/6022R/6032R/6072R/6082R)

Appearance

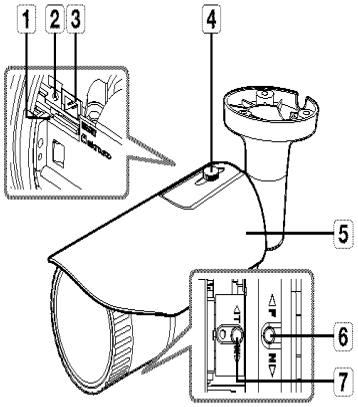

<QNO-6072R>

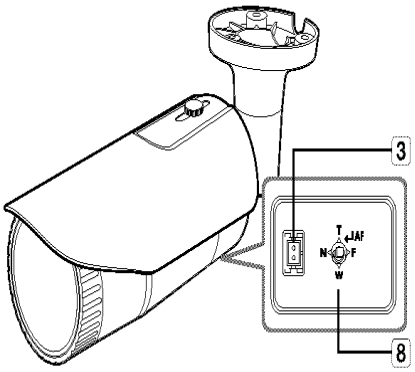

<QNO-6082R>

Item	Description	
1 Micro SD card slot	(Internal space of the product) This is a slot in which you can insert a Micro SD card.	
2 Reset Button	The button restores all camera settings to the factory default. Press and hold for about 5 seconds to reboot the system. If you reset the camera, the network settings will be adjusted so that DHCP can be enabled. If there is no DHCP server in the network, you must run the IP Installer program to change the basic network settings such as IP address, Subnet mask, Gateway, etc., before you can connect to the network.	
3 Test Monitor Out	Output port for test monitoring the video output. Use the test monitor cable to connect to a mobile display and check the test video.	
4 Sunshield Hold	It fixes the sunshield with the camera.	
5 Sunshield	It protects the camera from the direct sunlight.	
6 Zoom control lever	T	Zoom in (Tele)
	W	Zoom out (Wide)
	Release the lever and move it to left or right to zoom the lens in or out. Turn the lever clockwise to fix the adjusted position to prevent it from being moved.	
7 Focus control lever	N	Focusing on a near object (Near)
	F	Focusing on a far object (Far)
	Release the lever and move it to left or right to adjust the lens focus. Turn the lever clockwise to fix the adjusted position to prevent it from being moved.	
8 Zoom/Focus Control Button	T	Zoom in (Tele)
	W	Zoom out (Wide)
	N	Focusing on a near object (Near)
	F	Focusing on a far object (Far)
	Focus Control	Press this button for automatic focus control.

Components

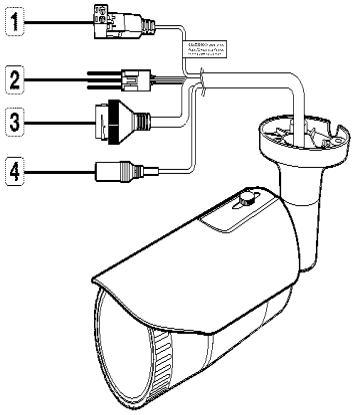

Item	Description	
1 Power Port	Used to plug the power cable.	
2 Alarm I/O Port	ARM-OUT	Used to connect the alarm output signal.
	GND	These are common ports to connect alarm input/output signals.
	ARM-IN	Used to connect the alarm input sensor or external day/night sensor.
3 Network Port	Used to connect the PoE or Ethernet cable for network connection.	
4 Audio In Jack	Used to connect to a microphone.	

overview

AT A GLANCE (QNV-6012R/6022R/6032R/6072R/6082R)

Appearance

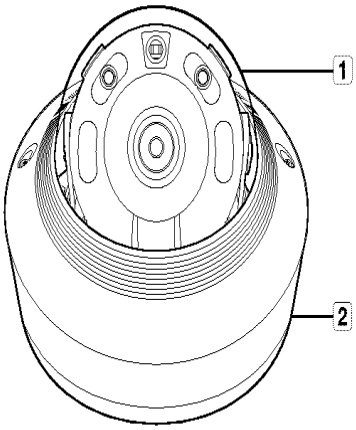

Item	Description
1 Dome cover	Case cover used to protect the lens and the main unit.
2 Camera Case	Housing part that covers the camera body.

Components

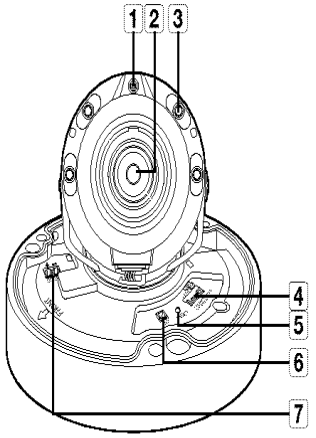

<QNV-6072R>

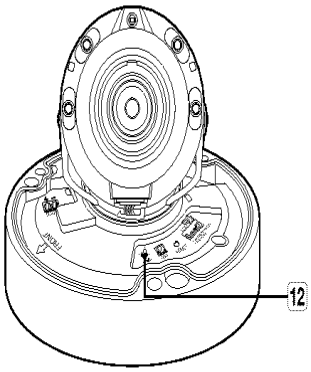

<QNV-6082R>

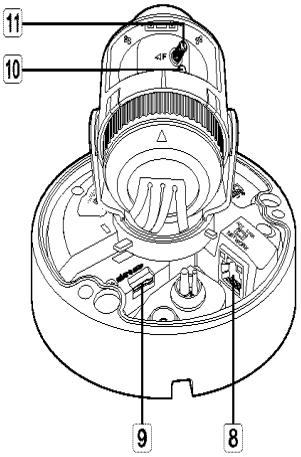

<QNV-6072R>

Item	Description	
1 Illumination Sensor	Detects incoming light to control the IR LED.	
2 Lens	Lens for the camera.	
3 IR LED	These infrared LED's are controlled by the illumination sensor.	
4 Audio and alarm cable port	ARM-IN	Used to connect the alarm input sensor or external day/night sensor.
	ARM-OUT	Used to connect the alarm output signal.
	GND	These are common ports to connect alarm input/output signals.
	AUDIO IN	Used to connect to a microphone.
5 Reset Button	The button restores all camera settings to the factory default. Press and hold for about 5 seconds to reboot the system. If you reset the camera, the network settings will be adjusted so that DHCP can be enabled. If there is no DHCP server in the network, you must run the IP Installer program to change the basic network settings such as IP address, Subnet mask, Gateway, etc., before you can connect to the network.	
6 Test Monitor Out	Output port for test monitoring the video output. Use the test monitor cable to connect to a mobile display and check the test video.	
7 Power Port	Port for power terminal block.	
8 Network Port	Used to connect the PoE or Ethernet cable for network connection.	
9 Micro SD Memory Card Compartment	Compartment for the Micro SD memory card.	
10 Zoom control lever	T	Zoom in (Tele)
	W	Zoom out (Wide)
	Release the lever and move it to left or right to zoom the lens in or out. Turn the lever clockwise to fix the adjusted position to prevent it from being moved.	
11 Focus control lever	N	Focusing on a near object (Near)
	F	Focusing on a far object (Far)
	Release the lever and move it to left or right to adjust the lens focus. Turn the lever clockwise to fix the adjusted position to prevent it from being moved.	

Item	Description	
12 Zoom/Focus Control Button	T	Zoom in (Tele)
	W	Zoom out (Wide)
	N	Focusing on a near object (Near)
	F	Focusing on a far object (Far)
	Focus Control	Press this button for automatic focus control.

installation & connection

INSTALLATION (QND-6012R/6022R/6032R/6072R/6082R)

Precautions before installation

Ensure you read out the following instructions before installing the camera:

- It must be installed on the area (ceiling or wall) that can withstand 5 times the weight of the camera including the installation bracket.
- Stuck-in or peeled-off cables can cause damage to the product or a fire.
- For safety purposes, keep anyone else away from the installation site. And put aside personal belongings from the site, just in case.

Disassembling

1. Use one hand to hold the camera's bottom part and turn the cover counterclockwise with another hand to separate it.

※ Do not touch the transparent part of the dome cover once the protective film is removed.

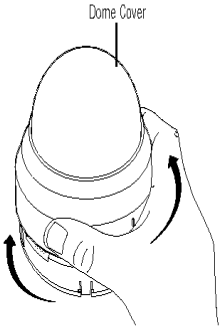

2. Lift up the inner cover to separate it.

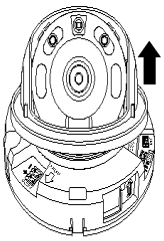

Installation

1. Consider the direction to be monitored, attach the template, and drill holes by following the template.

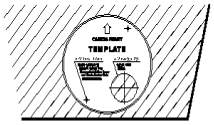

2. Using 2 tapping screws, fix the camera at 2 holes drilled with a template.
   ※ Set the < ⇧ > mark imprinted on the camera to face the direction of camera monitoring.
3. Connect the camera internal terminal with the corresponding cable.
4. Adjust the lens in a desired direction by referring to the "**Adjusting the monitoring direction for the camera**" section. (page 23)

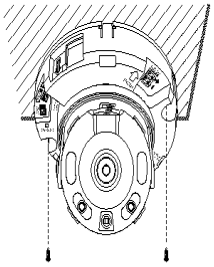

※ We recommend you not to touch the lens as the camera lens has been properly focused in the final process of manufacturing. If so, the lens may be out of focus or stained by alien substances.

5. Please connect the inner cover to the main body.
6. While grabbing the bottom side of the camera with your hand, please grab and push its cover with the other hand to align the two arrow signs, as shown in the figure.

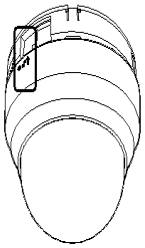

※ To assemble the dome cover, make the arrows match each other and press the cover firmly.
If the dome cover is rotated during assembly or is assembled incorrectly, diffused reflection may occur or the lens section may rotate, which will cause the shooting range to be changed.

※ Make sure that the dome cover is correctly connected to the bottom part as shown in the figure.
If the snap-fit is not connected correctly, the dome cover may fall, which may cause injury.

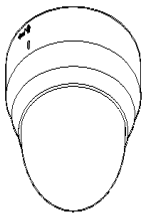

INSTALLATION (QNO-6012R/6022R/6032R/6072R/6082R)

※ This camera is waterproof and in compliance with the IP66 spec, but the jack connected to the external cable is not. You are recommended to install this product below the edge of eaves to prevent the cable from being externally exposed.

Precautions before installation

Ensure you read out the following instructions before installing the camera:

- It must be installed on the area (ceiling or wall) that can withstand 5 times the weight of the camera including the installation bracket.
- Stuck-in or peeled-off cables can cause damage to the product or a fire.
- For safety purposes, keep anyone else away from the installation site.
  And put aside personal belongings from the site, just in case.
- Do not use the sunshield hole for any purpose other than for connecting the sunshield.
- For the manual variable focal lens camera, features such as focus and zoom should be adjusted before installation.
  When adjusting these, be sure to prevent foreign substances from becoming attached.

Installation

1. Consider the direction to be monitored, attach the template, and drill holes by following the template.

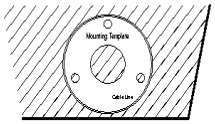

2. Insert and fasten 3 tapping screws into 3 holes to secure the camera.
3. Connect the appropriate cables with camera terminals.

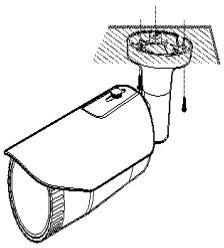

4. Adjust the camera direction using the L wrench provided.

※ When you adjust the camera position using a bracket, please loosen the bracket screw, adjust the camera, and tighten it. If you attempt to adjust it forcibly while the screw is tight, it may result in a scratch or other problems.

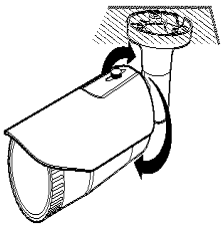

How to connect the RJ45 waterproof cable to a LAN cable

1. Insert it through the arrow direction.

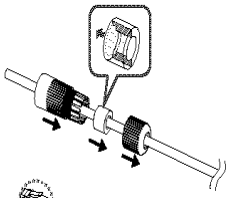

2. Connect the LAN connector (male) to the cable.

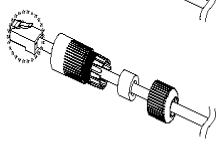

3. Connect the RJ45 modular jack (female) to the RJ45 connector (male).

※ Please, keep each of the parts separated.

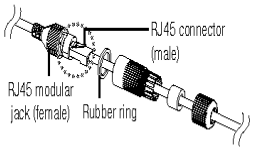

4. Assemble by rotating the RJ45 modular jack (female) and the RJ45 protection cover clockwise (Follow the arrow).

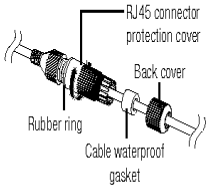

5. Assemble by rotating RJ45 protection cover and back cover clockwise (Follow the arrow).
   When the back cover is assembled, the cable waterproof gasket is tightly attached to the cable to make it waterproof.

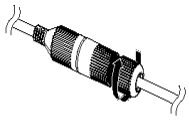

※ You must fully assemble it to rotate the back cover up to the end of the screw thread of the RJ45 connector.

installation & connection

Outdoor installation

When you install it outside of the building, please waterproof it with waterproof butyl rubber tape (can be purchased in stores) so that water does not leak from the gap of the cable connected to the outside.

1. Connect the power, I/O, AUDIO, and LAN cables.
2. Wrap the black cable jacket (Area A) and the cable connection area with waterproof (butyl rubber) tape so that more than half of the butyl rubber tape is overlapped.

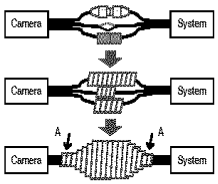

※ If the cable jacket is not waterproofed properly, then it can directly cause leakage. Make sure to protect the cable with a dense layer of taping.

※ Waterproof butyl tape is made of butyl rubber that can be stretched to twice its normal length.

To adjust the zoom factor or focus (QNO-6072R)

1. Loosen the front cover as shown.
2. Loosen the zoom/focus lever slightly.
3. Position the zoom/focus lever to WIDE (NEAR) or TELE (FAR) as appropriate.
4. Then, tighten the zoom/focus lever to fix the adjusted position.
5. Turn the front cover to tighten it.

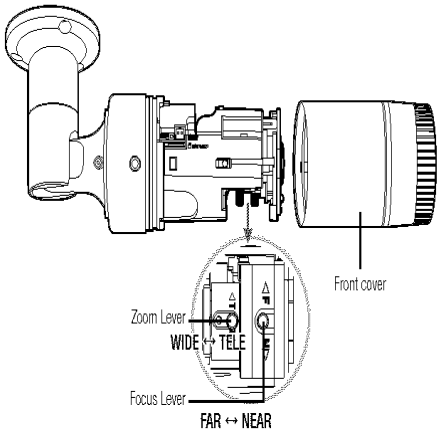

※ To ensure seamless waterproofing, tighten up the front cover by turning it to the end.
When combining the front cover, please combine the main body and the front cover so that the LOCK indicator is interlocked.

※ Use the lever to adjust the zoom factor or focus, and turn the lever clockwise to fix it.

※ Before you can adjust the zoom factor/focus of the lens, loosen and remove the front cover.

INSTALLATION (QNV-6012R/6022R/6032R)

※ This camera is waterproof and in compliance with the IP66 spec, but the jack connected to the external cable is not. You are recommended to install this product below the edge of eaves to prevent the cable from being externally exposed.

Precautions before installation

Ensure you read out the following instructions before installing the camera:

- It must be installed on the area (ceiling or wall) that can withstand 5 times the weight of the camera including the installation bracket.
- Stuck-in or peeled-off cables can cause damage to the product or a fire.
- For safety purposes, keep anyone else away from the installation site.
  And put aside personal belongings from the site, just in case.

Disassembling

1. Using the L wrench provided, turn the 2 fastening bolts on the dome cover counter clockwise to remove the cover.

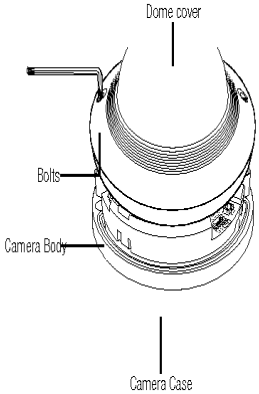

Installation

1. Using the template provided as an accessory, drill the screw installation hole(diameter of 6mm, minimal depth of 55mm) and firmly insert the plastic anchor provided as an accessory to the end.
2. Fit the bottom hole to the anchor hole and insert and fix the taping screw (M4.5xL50).
3. Connect and arrange the necessary cables lest that they should be damaged or twisted while installing the camera.
4. Adjust the lens in a desired direction by referring to the "**Adjusting the monitoring direction for the camera**" section. (page 23)
5. Close the dome cover.
   ※ Securely fasten the fastening bolt using an L wrench to prevent water from leaking.

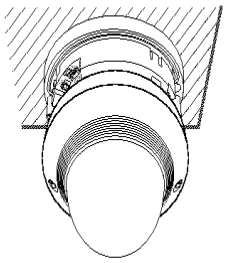

Connecting the LAN cable

1. Remove the dome cover and the case.
2. Pull off the cable bush at the bottom as shown in the figure.

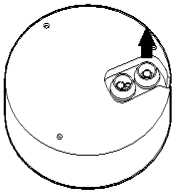

* Use an appropriate cable bush for the LAN cable to be connected.
- Basic camera : Use the cable with a diameter of Ø5~6.5.

3. Pull off the extruded part of the 1-hole cable bush provided.
4. Use the cap installer to route the LAN cable through the cable bush.

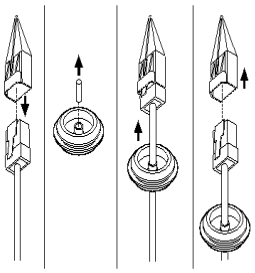

5. Route the LAN cable through the hole created after removing the cable bush in Step 2, and then connect it to the ethernet terminal.
6. Insert the bush of the LAN cable into the hole.

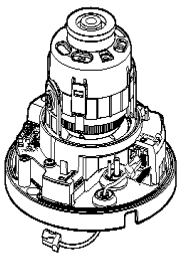

Connecting the audio/alarm cable and power cable

1. Remove the dome cover and the case.
2. Pull off the cable bush at the bottom as shown in the figure.

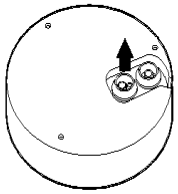

3. Pull off the small extruded part on the bush of the alarm/audio cable, and route the power cable through the bush.

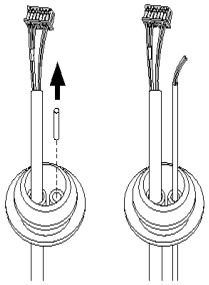

4. Route the alarm/audio cable through the hole left after removing the cable bush in Step 2. Connect each to the alarm terminal and power terminal block of the PCB, respectively.
5. When mounting the camera, hang the cables on the fixed hook to avoid cables from being damaged or pinched.
6. Insert the bush of the alarm/audio cables into the hole.
7. Adjust the lens in a desired direction by referring to the "**Adjusting the monitoring direction for the camera**" section. (page 23)
8. Attach the dome cover.

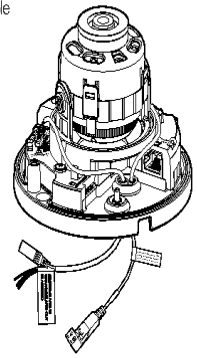

installation & connection

INSTALLATION (QNV-6072R/6082R)

* This camera is waterproof and in compliance with the IP66 spec. but the jack connected to the external cable is not. You are recommended to install this product below the edge of eaves to prevent the cable from being externally exposed.

Precautions before installation

Ensure you read out the following instructions before installing the camera:

- It must be installed on the area (ceiling or wall) that can withstand 5 times the weight of the camera including the installation bracket.
- Stuck-in or peeled-off cables can cause damage to the product or a fire.
- For safety purposes, keep anyone else away from the installation site.
  And put aside personal belongings from the site, just in case.
- For the manual variable focal lens camera, features such as focus and zoom should be adjusted before installation.
  When adjusting these, be sure to prevent foreign substances from becoming attached.

Disassembling

1. Using the L wrench provided, turn the 2 fastening bolts on the dome cover counter clockwise to remove the cover.

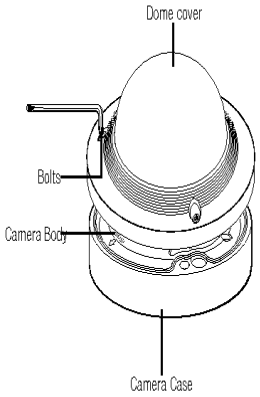

Installation

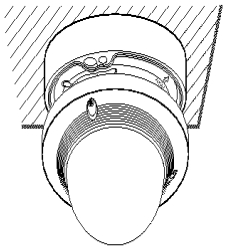

1. Using the template provided as an accessory, drill the screw installation hole(diameter of 6mm, minimal depth of 55mm) and firmly insert the plastic anchor provided as an accessory to the end.
2. Fit the bottom hole to the anchor hole and insert and fix the taping screw (M4.5xL50).
3. Connect and arrange the necessary cables lest that they should be damaged or twisted while installing the camera.
4. Adjust the lens in a desired direction by referring to the "**Adjusting the monitoring direction for the camera**" section. (page 23)

* For the manual variable focal lens camera, features such as focus and zoom should be adjusted before installation.
  When adjusting these, be sure to prevent foreign substances from becoming attached.

5. Close the dome cover.
   * Securely fasten the fastening bolt using an L wrench to prevent water from leaking.

Connecting the LAN cable

1. Remove the dome cover and the case.
2. Pull off the cable bush at the bottom as shown in the figure.

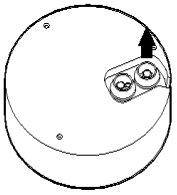

* Use an appropriate cable bush for the LAN cable to be connected.
- Basic camera : Use the cable with a diameter of Ø5~6.5.

3. Pull off the extruded part of the 1-hole cable bush provided.
4. Use the cap installer to route the LAN cable through the cable bush.

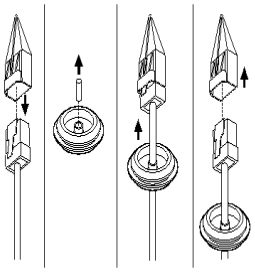

5. Route the LAN cable through the hole created after removing the cable bush in Step 2, and then connect it to the ethernet terminal.
6. Insert the bush of the LAN cable into the hole.

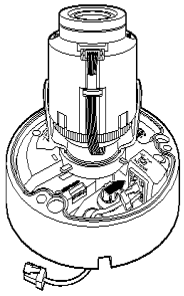

Connecting the audio/alarm cable and power cable

1. Remove the dome cover and the case.
2. Pull off the cable bush at the bottom as shown in the figure.

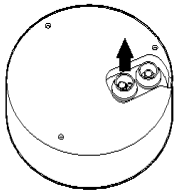

3. Pull off the small extruded part on the bush of the alarm/audio cable, and route the power cable through the bush.

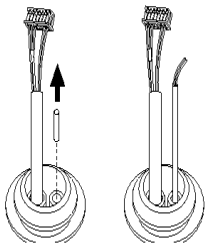

4. Route the alarm/audio cable through the hole left after removing the cable bush in Step 2. Connect each to the alarm terminal and power terminal block of the PCB, respectively.
5. When mounting the camera, hang the cables on the fixed hook to avoid cables from being damaged or pinched.
6. Insert the bush of the alarm/audio cables into the hole.
7. Adjust the lens in a desired direction by referring to the "**Adjusting the monitoring direction for the camera**" section. (page 23)
8. Attach the dome cover.

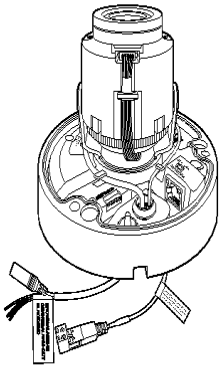

installation & connection

Attaching to the unbundled adapter

Choose and purchase a necessary one of the following options (unbundled) that is suitable to the installation site or for your convenience.

1. Remove the dome cover from the case by referring to the "**Disassembling**" section. (page 20)
2. Use the machine screw to fix the camera case to the unbundled adapter.
3. Connect and arrange the necessary cables lest that they should be damaged or twisted while installing the camera.
4. Install the camera body in the reverse order of "**Disassembling**".
5. Adjust the lens in a desired direction by referring to the "**Adjusting the monitoring direction for the camera**" section. (page 23)
6. Close the dome cover.
   - Securely fasten the fastening bolt using an L wrench to prevent water from leaking.

Outdoor installation

When you install it outside of the building, please waterproof it with waterproof butyl rubber tape (can be purchased in stores) so that water does not leak from the gap of the cable connected to the outside.

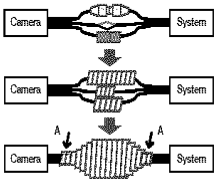

1. Connect the power, AUDIO, and LAN cables.
2. Wrap the black cable jacket (Area A) and the cable connection area with waterproof (butyl rubber) tape so that more than half of the butyl rubber tape is overlapped.

- If the cable jacket is not waterproofed properly, then it can directly cause leakage. Make sure to protect the cable with a dense layer of taping.
- Waterproof butyl tape is made of butyl rubber that can be stretched to twice its normal length.

Adjusting the monitoring direction for the camera (QND-6012R/6022R/6032R/6072R/6082R, QNV-6012R/6022R/6032R/6072R/6082R)

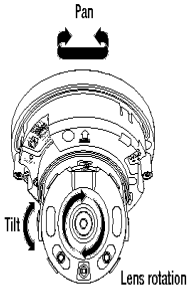

▪ Adjusting the monitoring direction

You can adjust the camera direction only when the camera is fixed on the ceiling.
Where, rotating the camera unit to the left or right is called Pan, adjusting the tilt is called Tilt, and turning the lens on its axis is called Rotation.

- The effective range of pan is a total of 350 degrees.
- The effective range of rotation is a total of 355 degrees.
- The effective range of tilt is a total of 67 degrees.

- The image can be covered up by the camera case depending on the angle.
- Do not forcefully turn the focus/zoom lens after the dome case is disassembled. Otherwise, it may cause an incorrect focus due to a motor failure.

▪ Methods of adjustment

1. After installing the camera, adjust the panning angle in consideration of the monitoring direction.
2. Set the horizontal angle so that the image is not reversed.
3. Adjust the tilt angle so that the camera faces toward the monitoring object.

INSERTING/REMOVING A MICRO SD MEMORY CARD

- Disconnect the power cable from the camera before inserting the Micro SD memory card.
- Do not insert the Micro SD memory card while it's upside down by force. Otherwise, it may damage the Micro SD memory card.
- When it rains or the humidity is high, insertion or ejection of a Micro SD card is not recommended.
- Disassembly of the product cover should be finished within 5 minutes, or there will be the risk of internal dew condensation.

Inserting a Micro SD Memory Card (QNO-6012R/6022R/6032R/6072R/6082R)

1. Turn the front cover to the UNLOCK [ ] direction.

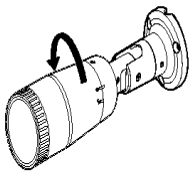

2. Pull and separate the front cover.

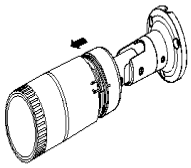

3. Insert a Micro SD card in the arrow direction shown in the figure.

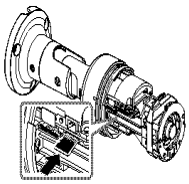

<QNO-6012R/6022R/6032R>

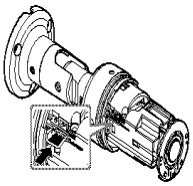

<QNO-6072R>

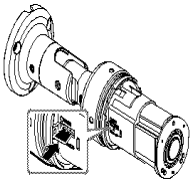

<QNO-6082R>

Inserting a Micro SD Memory Card (QND-6012R/6022R/6032R/6072R/6082R, QNV-6012R/6022R/6032R/6072R/6082R)

1. Separate the Dome cover of the camera.
2. Insert a Micro SD card in the arrow direction shown in the figure.

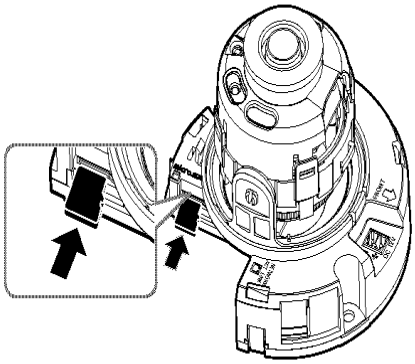

<QND-6012R/6022R/6032R>

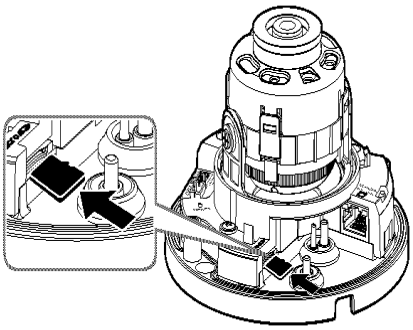

<QNV-6012R/6022R/6032R>

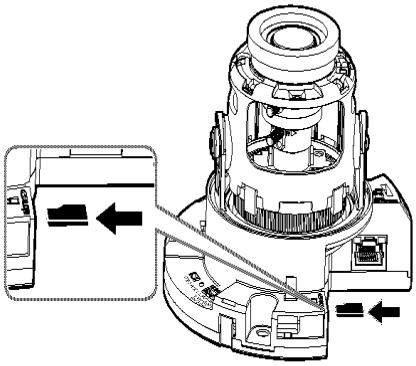

<QND-6072R/6082R>

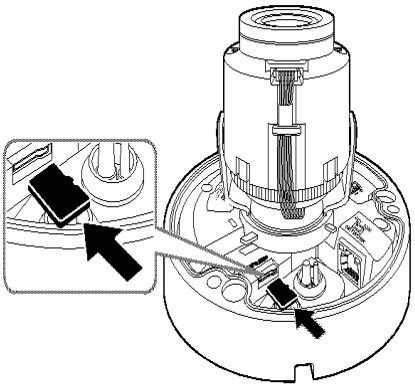

<QNV-6072R/6082R>

Removing a Micro SD Memory Card

Gently press down on the exposed end of the memory card as shown in the diagram to eject the memory card from the slot.

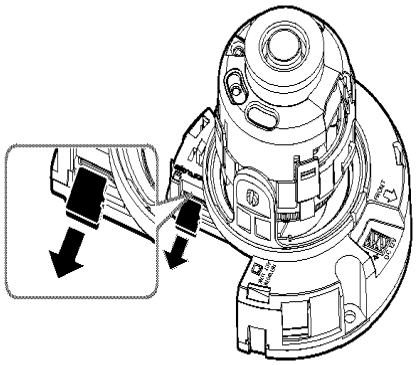

<QND-6012R/6022R/6032R>

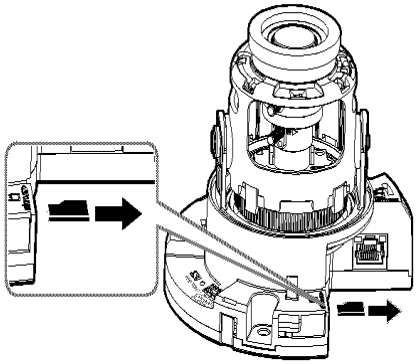

<QND-6072R/6082R>

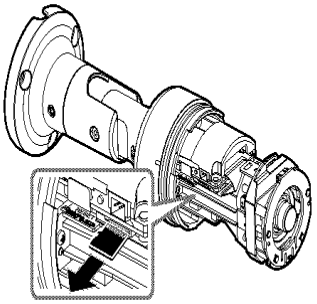

<QNO-6012R/6022R/6032R>

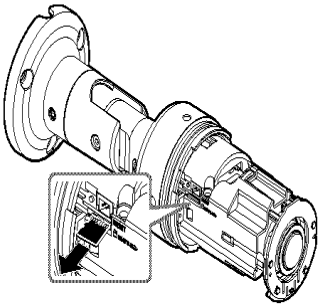

<QNO-6072R>

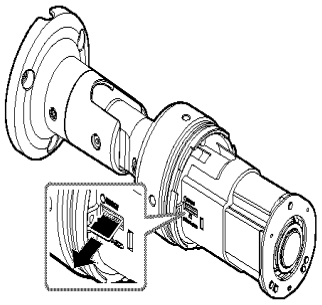

<QNO-6082R>

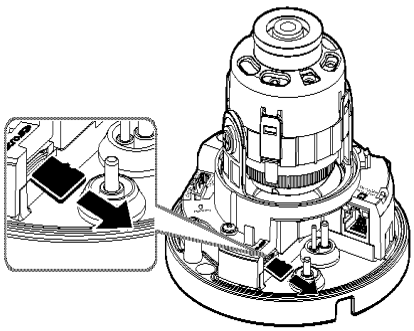

<QNV-6012R/6022R/6032R>

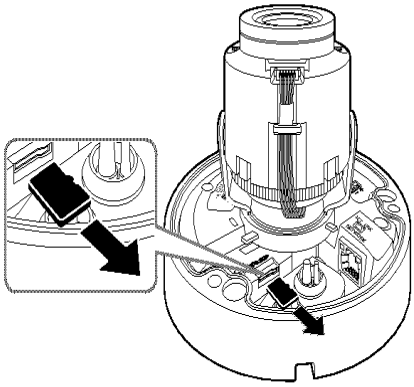

<QNV-6072R/6082R>

- Pressing too hard on the Micro SD memory card can cause the card to shoot out uncontrollably from the slot when released.
- Before removing the Micro SD memory card, in <**Storage**>, set the device to <**Off**> and press the [**Apply**] button and turn the camera off.
- If you turn off the camera or remove the Micro SD memory card that contains data from the product, the data may be lost or damaged.

POWERING AND NETWORKING

* Before plugging the DC 12V power plug into the outlet, please assemble the terminal block first.

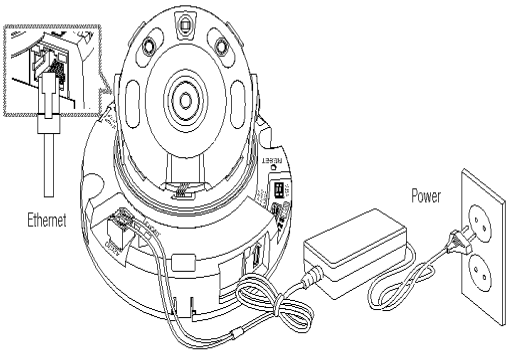

<QND-6012R/6022R/6032R>

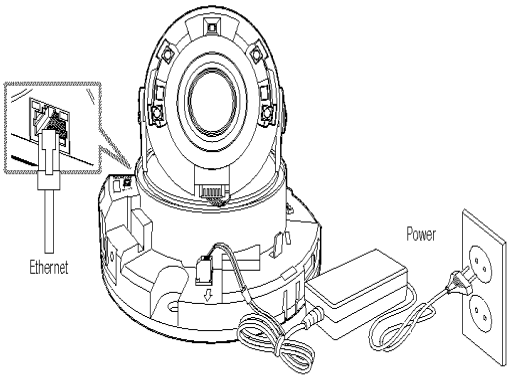

<QND-6072R/6082R>

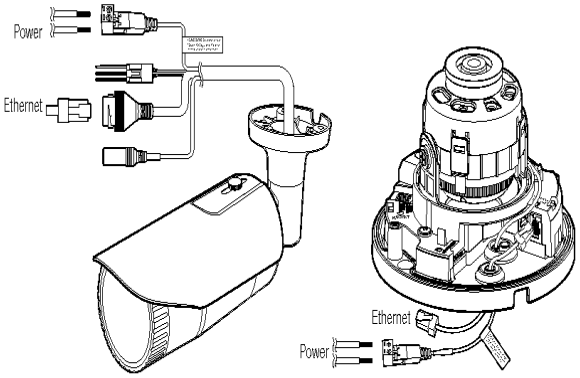

<QNO-6012R/6022R/6032R> <QNV-6012R/6022R/6032R>

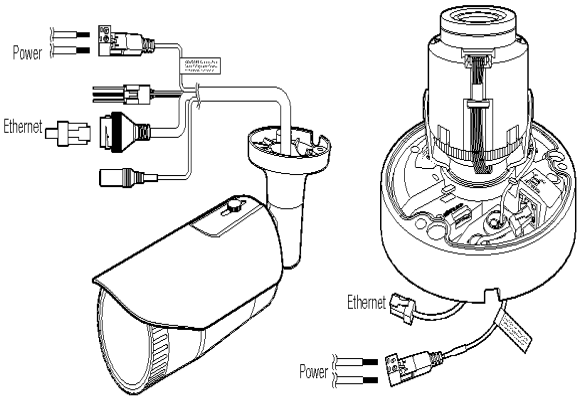

<QNO-6072R/6082R> <QNV-6072R/6082R>

installation & connection

Ethernet Connection

Connect the Ethernet cable to the local network or to the Internet.

Power Supply

Use the screwdriver to connect each line (+, –) of the power cable to the corresponding power port of the camera.

- If both PoE and DC 12V are applied simultaneously, the product will be supplied with power from DC 12V.
  - You can also use a router featuring PoE to supply power to the camera.
  - Use PoE that is compliant with the IEEE 802.3af protocols.
  - It is advisable to use only one power source from PoE and DC 12V.
- Be careful not to reverse the polarity when you connect the power cable.
- If you want to connect an external device, you must turn off the external device before proceeding.

Power Cable Specification for Each Model

In case of DC 12V Input:

Wire Type (AWG)	#18	#20	#22
Model Name	Cable Length (Max.)		
QND-6072R/6082R, QNV-6072R/6082R	30m	26m	16m
QNO-6072R/6082R	30m	26m	16m
QND-6012R/6022R/6032R, QNV-6012R/6022R/6032R	30m	26m	16m
QNO-6012R/6022R/6032R	30m	26m	16m

Network Cable Specification

Item	Contents	Remark
Connector	RJ45	
Ethernet	10/100BASE-T	10/100 Mbps
Cable	Category 5e	
Max Distance	100M	DC Resistance ≤ 0.125 Ω/m
PoE Support	IEEE 802.3af	

- If you use a cable other than Category 5e standards, 100m of transmission distance is not guaranteed.

Connecting to Audio Input

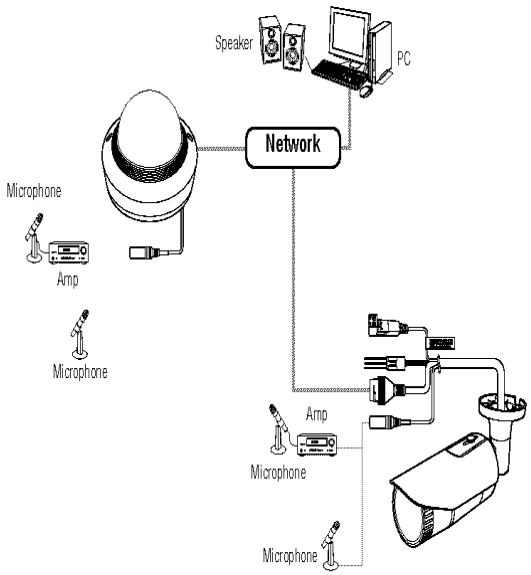

1. Connect the AUDIO IN port of the camera with the microphone or LINE OUT port.

- The QND model supports the built-in microphone only.

2. Check the specifications for audio input.

- **Audio Codec**
  - Audio In : G.711 PCM (Bit Rate: 64kbps / Sampling Frequency: 8kHz), G.726 ADPCM (Bit Rate: 16Kbps, 24Kbps, 32Kbps, 40Kbps / Sampling Frequency: 8kHz)
- **Full duplex Audio**
- **Audio in (QND-6012R/6022R/6032R/6072R/6082R)** : Built-in microphone
- **Audio in (QNO-6012R/6022R/6032R/6072R/6082R, QNV-6012R/6022R/6032R/6072R/6082R)** : Selectable (microphone/Line-in), Supported voltage: 2.5VDC (4mA), Input impedance: 2K Ohm

Connecting to the I/O port box

Connect the Alarm I/O cable to the corresponding port of the port box.

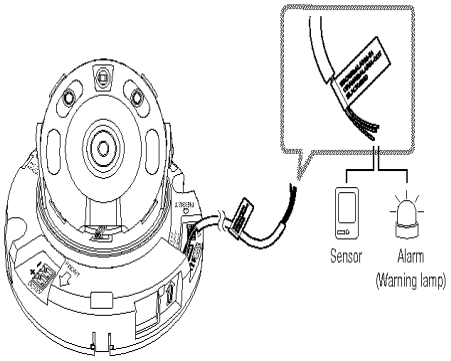

<QND-6012R/6022R/6032R>

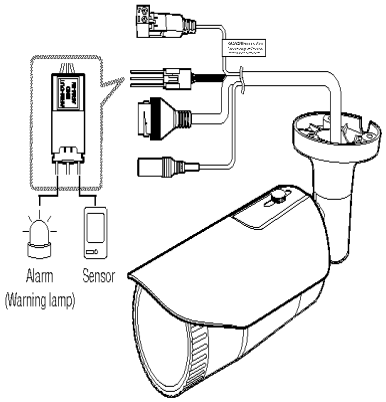

<QNO-6012R/6022R/6032R/6072R/6082R>

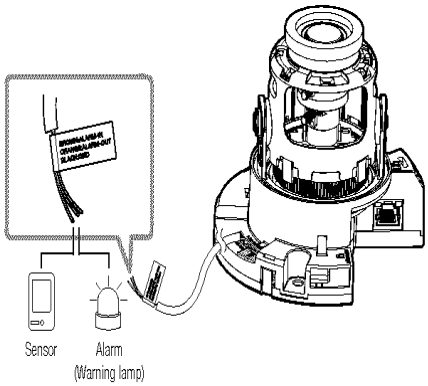

<QND-6072R/6082R>

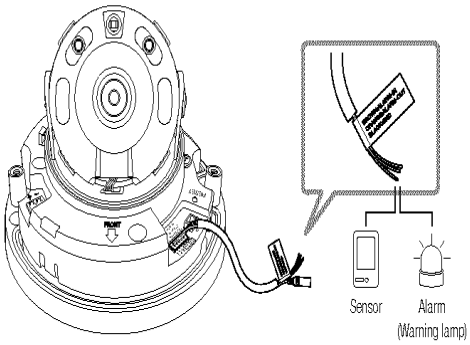

<QNV-6012R/6022R/6032R>

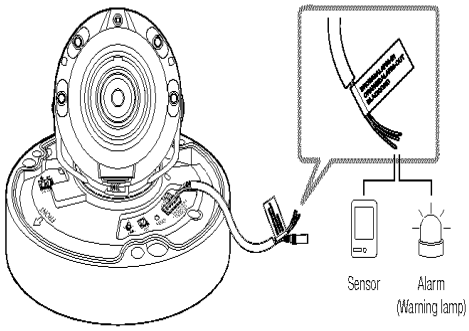

<QNV-6072R>

installation & connection

- ALARM-IN : Used to connect the alarm input sensor or external day/night sensor.
- ALARM-OUT : Used to connect the alarm output signal.
- GND : Common port for alarm in/output signal.

* If devices (e.g., flashing light and siren) that exceed the voltage and current specifications are connected by using the open collector method, it may cause malfunction.
Refer to the "**Alarm Out Wiring Diagram**" when connecting devices that exceed the voltage and current specifications. (page 30)

To connect the external sensor

Connect one strand of each signal line (2-strand) of the sensors to the [**ALARM IN**] port, and connect the other strand to the [**GND**] port.

Alarm In Wiring Diagram

To connect the alarm out

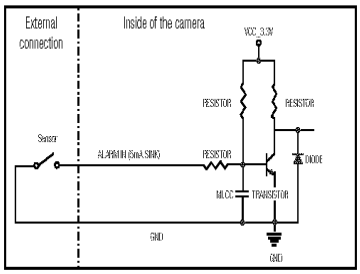

If devices (e.g., flashing light and siren) that exceed the voltage and current specifications are connected by using the open collector method, it may cause malfunction.

Refer to the alarm out connection diagram below when connecting devices that exceed the voltage and current specifications.

Alarm Out Wiring Diagram

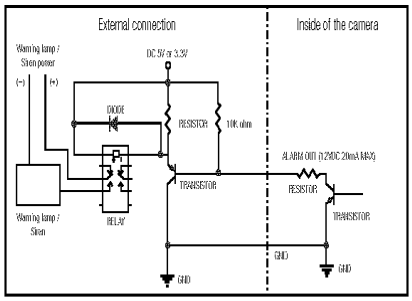

network connection and setup

You can set up the network settings according to your network configurations.

CONNECTING THE CAMERA DIRECTLY TO LOCAL AREA NETWORKING

Connecting to the camera from a local PC in the LAN

1. Launch an Internet browser on the local PC.
2. Enter the IP address of the camera in the address bar of the browser.

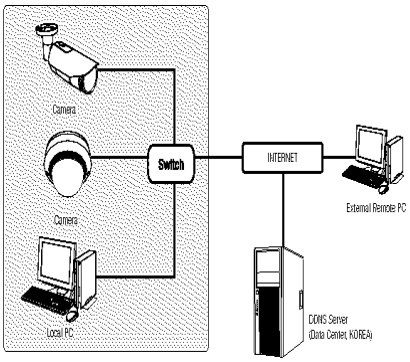

<Local Network>

- A remote PC in an external Internet out of the LAN network may not be able to connect to the camera installed in the intranet if the port-forwarding is not properly set or a firewall is set.
  In this case, to resolve the problem, contact your network administrator.
- In the IP installer, you can use the initial password, "**4321**" to set IP Address, Subnet Mask, Gateway, HTTP Port, VNP Port, IP type. After changing the network interface, for better security, access the web viewer and change the password.
- By factory default, the IP address will be assigned from the DHCP server automatically.
  If there is no DHCP server available, the IP address will be set to 192.168.1.100.
  To change the IP address, use the IP Installer.
  For further details on IP Installer use, refer to "**Static IP Setup**". (Page 32)

CONNECTING THE CAMERA DIRECTLY TO A DHCP BASED DSL/CABLE MODEM

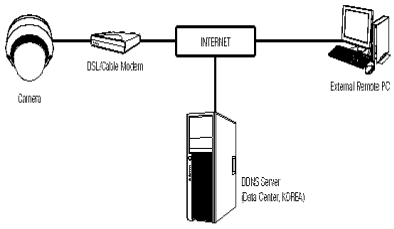

1. Connect the user PC directly with the network camera.
2. Run the IP Installer and change the IP address of the camera so that you can use the web browser on your desktop to connect to the Internet.
3. Use the Internet browser to connect to the web viewer.
4. Move to [**Setup**] page.
5. Move to [**Network**] – [**DDNS**] and configure the DDNS settings.
6. Move to [**Basic**] – [**IP & Port**], and set the IP type to [**DHCP**].
7. Connect the camera, which was removed from your PC, directly to the modem.
8. Restart the camera.

- For information on how to set DDNS, refer to the online help of Web Viewer.
- For information on how to set the IP format, refer to the online help of Web Viewer.

network connection and setup

BUTTONS USED IN IP INSTALLER

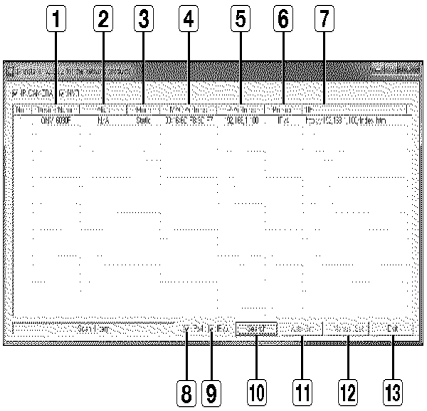

Item	Description
1 Device Name	Model name of the connected camera. Click the column to sort the list by model name. However, search will be stopped if clicked during the search.
2 Alias	This function is not currently implemented.
3 Mode	Displays either <**Static**> or <**Dynamic**> for the current network connection status.
4 MAC(Ethernet) Address	Ethernet address for the connected camera. Click the column to sort the list by Ethernet address. However, search will be stopped if clicked during the search.
5 IP Address	IP address. Click the column to sort the list by IP address. However, search will be stopped if clicked during the search.
6 Protocol	Network setting for the camera. The factory default is "IPv4". Cameras with the IPv6 setting will be displayed "IPv6".
7 URL	DDNS URL address enabling access from the external Internet. However, this will be replaced with the <**IP Address**> of the camera if DDNS registration has failed.
8 IPv4	Scans for cameras with the IPv4 setting.
9 IPv6	Scans for cameras with the IPv6 setting. Activated in an IPv6 compliant environment only.
10 Search	Scans for cameras that are currently connected to the network. However, this button will be grayed out if neither IPv4 nor IPv6 is checked.
11 Auto Set	The IP Installer automatically configures the network settings.
12 Manual Set	You should configure the network settings manually.
13 Exit	Exits the IP Installer program.

- For the IP installer, use only the installer version provided in the installation CD or use the latest one if available. You can download the latest version from the Hanwha Techwin web site.
- If the supporting OS is Windows 8.1, it is recommended that you use the Wisenet Device Manager instead of the IP Wisenet. The Wisenet Device Manager Program can be downloaded by visiting the Hanwha Techwin website (http://www.hanwhasecurity. com) under the menu <**Technical Guides**> - <**Online Tool**>.

STATIC IP SETUP

Manual Network Setup

Run <**IP Installer_v2.XX.exe**> to display the camera search list. At the initial startup, both [**Auto Set**] and [**Manual Set**] will be grayed out.

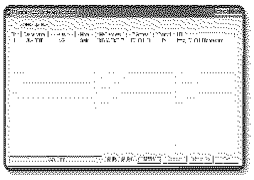

- For cameras found with the IPv6 setting, these buttons will be grayed out as the cameras do not support this function.

1. Select a camera in the search list.
   Check the MAC address of the camera on the camera's label.
   Both the [**Auto Set**] and [**Manual Set**] buttons will be activated.
2. Click [**Manual Set**].
   The Manual Setting dialog appears.
   <**IP Address**>, <**Subnet Mask**>, <**Gateway**>, <**HTTP Port**>, and <**VNP Port**> of the camera are displayed in the preset values.
3. In the <**Address**> pane, provide the necessary information.
   - MAC (Ethernet) Address : The MAC address imprinted on the camera label is automatically displayed and requires no user setting.

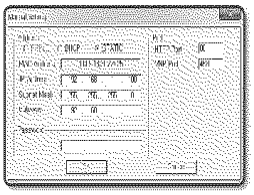

- IP related parameters can be set only when DHCP is not checked.

If not using a Broadband Router

For setting <**IP Address**>, <**Subnet Mask**>, and <**Gateway**>, contact your network administrator.

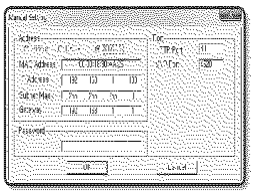

4. In the <**Port**> pane, provide necessary information.
   - HTTP Port : Used to access the camera using the Internet browser, defaulted to 80.
   - VNP Port : Used to control the video signal transfer, defaulted to 4520.
5. Enter the password.
   Enter the password of "**admin**" account, which was used to access the camera.

※ For the security purposes, you are recommended to use a combination of numbers, alphabets uppercase and lowercase and special characters for your password.

※ For information on how to change the password, refer to the online help of Web Viewer.

6. Click [**OK**].
   Manual network setup will be completed.

If using a Broadband Router

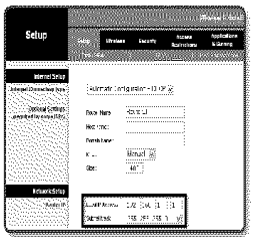

- IP Address : Enter an address falling in the IP range provided by the Broadband Router.
  ex) 192.168.1.2~254, 192.168.0.2~254,
  192.168.XXX.2~254
- Subnet Mask : The <**Subnet Mask**> of the Broadband Router will be the <**Subnet Mask**> of the camera.
- Gateway : The <**Local IP Address**> of the Broadband Router will be the <**Gateway**> of the camera.

※ The settings may differ depending on the connected Broadband Router model.
For more information, refer to the user manual of the applicable router.

※ For more information about port forwarding of the broadband router, refer to "**Port Range Forward (Port Mapping) Setup**". (Page 34)

If the Broadband Router has more than one camera connected

Configure the IP related settings and the Port related settings distinctly with each other.

ex)

Category		Camera #1	Camera #2
IP related settings	IP Address Subnet Mask Gateway	192.168.1.100 255.255.255.0 192.168.1.1	192.168.1.101 255.255.255.0 192.168.1.1
Port related settings	HTTP Port VNP Port	8080 4520	8081 4521

※ If the <**HTTP Port**> is set other than 80, you must provide the <**Port**> number in the address bar of the Internet browser before you can access the camera.
ex) http://IP address : HTTP Port
http://192.168.1.100:8080

Auto Network Setup

Run <**IP Installer_v2.XX.exe**> to display the camera search list.
At the initial startup, both [**Auto Set**] and [**Manual Set**] will be grayed out.

※ For cameras found with the IPv6 setting, these buttons will be grayed out as the cameras do not support this function.

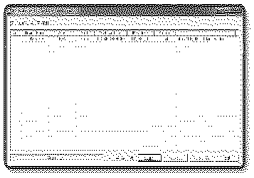

1. Select a camera in the search list.
   Check the MAC address of the camera on the camera's label.
   Both the [**Auto Set**] and [**Manual Set**] buttons will be activated.
2. Click [**Auto Set**].
   The Auto Setting dialog appears.
   The <**IP Address**>, <**Subnet Mask**>, and <**Gateway**> will be set automatically.

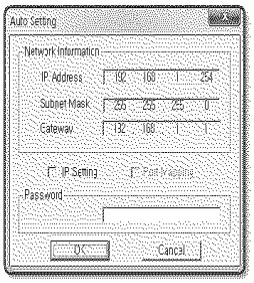

3. Enter the password.
   Enter the password of "**admin**" account, which was used to access the camera.

※ For the security purposes, you are recommended to use a combination of numbers, alphabets uppercase and lowercase and special characters for your password.

※ For information on how to change the password, refer to the online help of Web Viewer.

4. Click [**OK**].
   Auto network setup will be completed.

network connection and setup

DYNAMIC IP SETUP

Dynamic IP Environment Setup

- Example of the Dynamic IP environment
  - If a Broadband Router, with cameras connected, is assigned an IP address by the DHCP server
  - If connecting the camera directly to modem using the DHCP protocols
  - If IPs are assigned by the internal DHCP server via the LAN

Checking the Dynamic IP

1. Run the IP Installer on the user's local computer.
   Cameras allocated with <**Dynamic IP**> address are shown in the list.
2. Select a camera from the search result.
3. Click the [**Manual Set**] button and check the camera's <**Dynamic IP**> address.
   If you uncheck <**DHCP**>, you can change IP to <**Static**>.

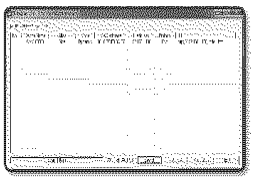

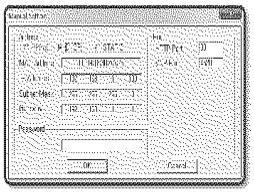

PORT RANGE FORWARD (PORT MAPPING) SETUP

If you have installed a Broadband Router with a camera connected, you must set the port range forwarding on the Broadband Router so that a remote PC can access the camera in it.

Manual Port Range Forwarding

1. From the Setup menu of the Broadband Router, select <**Applications & Gaming**> - <**Port Range Forward**>.
   For setting the port range forward for a third-party Broadband Router, refer to the user guide of that Broadband Router.
2. Select <**TCP**> and <**UDP Port**> for each connected camera to the Broadband Router.
   The number of each port to be configured to the IP router should be set according to the port number designated in <**Setup**> - <**Basic**> - <**IP & Port**> on the camera web viewer.

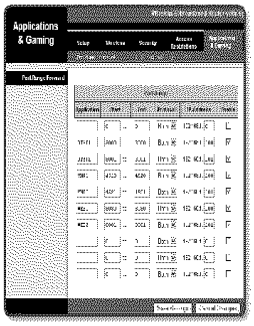

3. When done, click [**Save Settings**].
   Your settings will be saved.

※ Above sample instructions are based on the CISCO's Broadband Router.

※ The settings may differ depending on the connected Broadband Router model.
For more information, refer to the user manual of the applicable router.

Setting up Port Range Forward for several network cameras

- You can set a rule of Port Forwarding on the Broadband Router device through its configuration web page.
- A user can change each port using the camera setting screen.

When Camera1 and Camera2 are connected to a router :

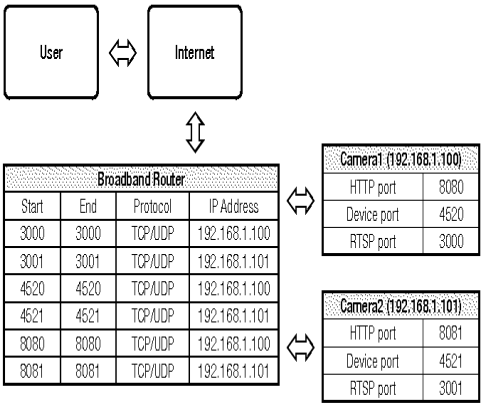

※ Port forwarding can be done without additional router setup if the router supports the UPnP (Universal Plug and Play) function.
After connecting the network camera, select the checkbox from the menu <**Quick connect**> in <**Wisenet DDNS**> in "**Settings → Network → DDNS**".

CONNECTING TO THE CAMERA FROM A SHARED LOCAL PC

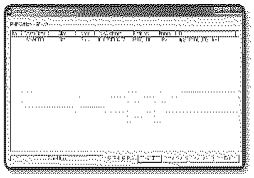

1. Run the IP Installer.
   It will scan for connected cameras and display them as a list.
2. Double-click a camera to access.
   The Internet browser starts and connects to the camera.

※ Access to the camera can also be gained by typing the camera's IP address in the address bar of the Internet browser.

CONNECTING TO THE CAMERA FROM A REMOTE PC VIA THE INTERNET

Since using the IP Installer on a remote computer that is not in the Broadband Router's network cluster is not allowed, users can access cameras within a Broadband Router's network by using the camera's DDNS URL.

1. Before you can access a camera in the Broadband Router network, you should have set the port range forward for the Broadband Router.
2. From the remote PC, launch the Internet browser and type the DDNS URL address of the camera, or the IP address of the Broadband Router in the address bar.
   ex) http://ddns.hanwha-security.com/ID

※ For information on how to register DDNS, refer to the network setup guide.

web viewer

CONNECTING TO THE CAMERA

Normally, you would

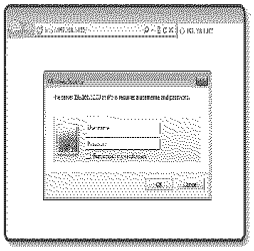

1. Launch the Internet browser.
2. Type the IP address of the camera in the address bar.
   ex) • IP address (IPv4) : 192.168.1.100 ➜ http://192.168.1.100
   - the Login dialog should appear.
   • IP address (IPv6) : 2001:230:abcd: ffff:0000:0000:ffff:1111 ➜ http://[2001:230:abcd:ffff:0000:0000:ffff:1111] - the Login dialog should appear.

If the HTTP port is other than 80

1. Launch the Internet browser.
2. Type the IP address and HTTP port number of the camera in the address bar.
   ex) IP address : 192.168.1.100:HTTP Port number(8080)
   ➜ http://192.168.1.100:8080 - the Login dialog should appear.

Using URL

1. Launch the Internet browser.
2. Type the DDNS URL of the camera in the address bar.
   ex) URL address : http://ddns.hanwha-security.com/ID
   - the Login dialog should appear.

※ Network connection is disabled in the LAN only environment.

Connecting via UPnP

1. Run the client or operating system in support of the UPnP protocol.
2. Click the camera name for search.
   In the Windows operating system, click the camera name searched from the network menu.
   - The login window is displayed.

Connecting via Bonjour

1. Run the client or operating system in support of the Bonjour protocol.
2. Click the camera name for search.
   In the Mac operating system, click the camera name searched from the Bonjour tab of Safari.
   - The login window is displayed.

To check the DDNS address

If the camera is connected directly to the DHCP cable modem, DSL modem, the IP address of your network will be changed each time you try to connect to the ISP (Internet Service Provider) server.
If this is the case, you will not be informed of the IP address changed by DDNS.

Once you register a dynamic IP-based device with the DDNS server, you can easily check the changed IP when you try to access the device.
To register your device to the <**DDNS**> server, visit http://ddns.hanwha-security.com and register your device first, and then set the Web Viewer's <**Network**> - <**DDNS**> to <**Wisenet DDNS**>, as well as providing <**Product ID**> that had been used for DDNS registration.

PASSWORD SETTING

When you access the product for the first time, you must register the login password.
When the "**Password change**" window appears, enter the new password.

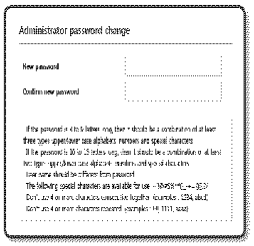

- For a new password with 8 to 9 digits, you must use at least 3 of the following: uppercase/lowercase letters, numbers and special characters. For a password with 10 to 15 digits, you must use at least 2 types of those mentioned.
  - Special characters that are allowed. : ~`!@#$%^*()_-+=|{}[].?/
- For higher security, you are not recommended to repeat the same characters or consecutive keyboard inputs for your passwords.
- If you lost your password, you can press the [**RESET**] button to initialize the product. So, don't lose your password by using a memo pad or memorizing it.

LOGIN

Whenever you access the camera, the login window appears.
Enter the User ID and password to access the camera.

1. Enter "**admin**" in the <**User name**> input box.
   The administrator ID, "**admin**", is fixed and can not be changed.
2. Enter the password in the <**Password**> input field.
3. Click [**OK**].
   If you have logged in successfully, you will the Live Viewer screen.

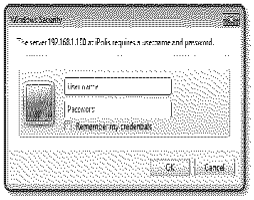

- When you access the camera web viewer, pay special attention to the security by checking whether the image data is encrypted.

- If you check the "**Remember my credentials**" option when your input is done, in future you will be logged in automatically without being prompted to enter the login information.
- You will experience the best video quality if the screen size is 100%. Reducing the ratio may cut the image on the borders.

CAMERA WEB VIEWER SETUP

1. Click the [**Setup** (⚙)] icon.
2. The Settings window appears.
3. You can configure settings for the camera's basic information, video, audio, network, event, analysis, and system over the network.
4. Click <**Help** (?)> to view detailed descriptions of each function.

SPECIFICATION (QND-6012R/6022R/6032R, QNV-6012R/6022R/6032R, QNO-6012R/6022R/6032R)

Items		Description		
		QND-6012R/6022R/6032R	QNV-6012R/6022R/6032R	QNO-6012R/6022R/6032R
Video	Imaging Device	1/2.8" 2MP CMOS		
	Effective Pixels	1920(H) x 1080(V)		
	Min. Illumination	QND-6012R/6032R/QNV-6012R/6032R/QNO-6012R/6032R Color : 0.1 Lux (F2.0, 1/30 sec), B/W : 0 Lux (IR LED on) QND-6022R/QNV-6022R/QNO-6022R Color : 0.1 Lux (F1.6, 1/30 sec), B/W : 0 Lux (IR LED on)		
	Video Out	CVBS : 1.0 Vp-p / 75Ω composite, 720x480(N), 720x576(P), for installation		
Lens	Focal Length (Zoom Ratio)	QND-6012R/QNV-6012R/QNO-6012R : 2.8mm fixed focal QND-6022R/QNV-6022R/QNO-6022R : 4mm fixed focal QND-6032R/QNV-6032R/QNO-6032R : 6mm fixed focal		
	Max. Aperture Ratio	QND-6012R/6032R/QNV-6012R/6032R/QNO-6012R/6032R : F2.0 QND-6022R/QNV-6022R/QNO-6022R : F1.6		
	Angular Field of View	QND-6012R/QNV-6012R/QNO-6012R : H: 113.74 / V: 61.5° / D: 134.45° QND-6022R/QNV-6022R/QNO-6022R : H: 87.6 / V: 46.4° / D: 104.5° QND-6032R/QNV-6032R/QNO-6032R : H: 52.8 / V: 30.3° / D: 60.4°		
	Focus Control	Fixed		
Pan / Tilt /Rotate	Range of Pan/Tilt/Rotation	0°~350° / 0°~67° / 0°~355°	0°~350° / 0°~67° / 0°~355°	-
Operational	IR Viewable Length	20m(65.62ft)	QNO-6012R/QNV-6012R : 20m(65.62ft) QNO-6022R/QNV-6022R : 25m(82.02ft) QNO-6032R/QNV-6032R : 30m(98.42ft)	
	Camera Title	Displayed up to 85 characters		
	Day & Night	Auto (ICR)		
	Backlight Compensation	BLC, WDR, SSDR		

Items		Description		
		QND-6012R/6022R/6032R	QNV-6012R/6022R/6032R	QNO-6012R/6022R/6032R
Operational	Wide Dynamic Range	120dB		
	Digital Noise Reduction	SSNR		
	Motion Detection	4ea, rectangular zones		
	Privacy Masking	6ea, rectangular zones		
	Gain Control	Support		
	White Balance	ATW / AWC / Manual / Indoor		
	LDC	Support		
	Electronic Shutter Speed	Minimum / Maximum / Anti flicker (1/5~1/12,000sec)		
	Video Rotation	Flip, Mirror, Hallway (90° / 270°)		
	Analytics	Defocus detection, Directional detection, Motion detection, Enter/Exit, Tampering, Virtual line		
	Alarm I/O	Input 1ea / Output 1ea		
	Alarm Triggers	Analytics, Network Disconnect, Alarm input		
	Alarm events	• File upload via FTP, E-Mail • Notification via E-Mail • SD/SDHC/SDXC or NAS recording at event triggers • Alarm output		
	Audio In	Built-in mic	Selectable(mic in/line in) Supply voltage: 2.5VDC(4mA), Input impedance: 2K Ohm	
Network	Ethernet	RJ-45 (10/100BASE-T)		
	Video Compression Format	H.265/H.264 : Main/High, MJPEG		
	Resolution	1920 x 1080, 1280 x 960, 1280 x 720, 800 x 600, 800 x 448, 720 x 576, 720 x 480, 640 x 480, 640 x 360		
	Max. Framerate	H.265/H.264 : Max. 30fps/25fps (60Hz/50Hz) MJPEG : Max. 15fps/12fps (60Hz/50Hz)		
	Smart Codec	WiseStreamⅢ		
	Video Quality Adjustment	H.264/H.265 : Target Bitrate Level Control MJPEG : Quality Level control		

Items		Description		
		QND-6012R/6022R/6032R	QNV-6012R/6022R/6032R	QNO-6012R/6022R/6032R
Network	Bitrate Control Method	H.264/H.265 : CBR or VBR Motion JPEG : VBR		
	Streaming	Unicast(6 users) / Multicast Multiple streaming (Up to 3 profiles)		
	Audio Compression	G.711 μ-law / G.726 Selectable G.726 (ADPCM) 8KHz, G.711 8KHz G.726 : 16Kbps, 24Kbps, 32Kbps, 40Kbps		
	Protocol	IPv4, IPv6, TCP/IP, UDP/IP, RTP(UDP), RTP(TCP), RTCP, RTSP, NTP, HTTP, HTTPS, SSL/TLS, DHCP, FTP, SMTP, ICMP, IGMP, SNMPv1/v2c/v3(MIB-2), ARP, DNS, DDNS, QoS, UPnP, Bonjour, LLDP		
	Security	HTTPS(SSL) Login Authentication Digest Login Authentication IP Address Filtering User access Log 802.1x Authentication (EAP-TLS, EAP-LEAP)		
	Edge Storage	Micro SD/SDHC/SDXC 1slot 128GB		
	Application Programming Interface	ONVIF Profile S/G/T SUNAPI(HTTP API) Wisenet open platform		
	Webpage Language	English, Korean, French, German, Spanish, Italian, Chinese, Russian, Japanese, Swedish, Portuguese, Czech, Polish, Turkish, Dutch, Hungarian, Greek		
	Web Viewer	Supported OS : Windows 7, 8.1, 10, Mac OS X 10.12, 10.13, 10.14 Recommended browser: Google Chrome Supported web browsers : MS Explore11, MS Edge, Mozilla Firefox(Window 64bit only), Apple Safari(Mac OS X only)		
	Memory	512MB RAM, 256MB Flash		

Items		Description		
		QND-6012R/6022R/6032R	QNV-6012R/6022R/6032R	QNO-6012R/6022R/6032R
Environmental	Operating Temperature / Humidity	-10°C ~ +55°C (14°F ~ +131°F) / Less than 90% RH	-30°C ~ +55°C (-40°F ~ +131°F) / Less than 90% RH * Start up should be done at above -20°C	
	Storage Temperature / Humidity	-30°C ~ +60°C (-22°F ~ +140°F) / Less than 90% RH		
	Certification	-	IP66, IK10	
Electrical	Electrical	PoE(IEEE802.3af, Class3), 12VDC		
	Power Consumption	PoE: Max 7.4 W, typical 6 W 12VDC: Max 6.4 W, typical 5.1 W	PoE: Max 7.4 W, typical 6 W 12VDC: Max 6.4 W, typical 5.1 W	PoE: Max 7 W, typical 5.2 W 12VDC: Max 6.1 W, typical 4.5 W
Mechanical	Color / Material	White / Plastic	White / Aluminum	Dark grey / Aluminum
	RAL Code	RAL9003		-
	Product dimensions / Weight	Ø110.0x86.0mm (Ø4.33x3.39"), 255 g	Ø120.3x91.7mm (Ø4.74x3.61"), 510 g	Ø70.0x246.0mm (Ø4.33x3.39"), 700 g

SPECIFICATION (QND-6072R/6082R, QNV-6072R/6082R, QNO-6072R/6082R)

Items		Description		
		QND-6072R/6082R	QNV-6072R/6082R	QNO-6072R/6082R
Video	Imaging Device	1/2.8" 2MP CMOS		
	Effective Pixels	1920(H) x 1080(V)		
	Min. Illumination	Color : 0.095 Lux (F1.6, 1/30 sec) B/W : 0 Lux (IR LED on)		
	Video Out	CVBS : 1.0 Vp-p / 75Ω composite, 720x480(N), 720x576(P), for installation		
Lens	Focal Length (Zoom Ratio)	QND-6072R/QNO-6072R/QNV-6072R : 3.2~10mm(3.1x) manual varifocal QND-6082R/QNO-6082R/QNV-6082R : 3.2~10mm(3.1x) motorized varifocal		
	Max. Aperture Ratio	F1.6(Wide) ~ F2.9(Tele)		
	Angular Field of View	H: 109.0° (Wide) ~ 33.2° (Tele) / V: 57.4° (Wide) ~ 18.7° (Tele) / D: 132.0° (Wide) ~ 38.0° (Tele)		
	Lens Type	QND-6072R/QNV-6072R/QNO-6072R : Manual QND-6082R/QNV-6082R/QNO-6082R : Simple focus		
Pan / Tilt /Rotate	Range of Pan/Tilt/Rotation	0°~350° / 0°~67° / 0°~355°	0°~350° / 0°~67° / 0°~355°	-
Operational	IR Viewable Length	20m(65.62ft)	30m(98.42ft)	
	Camera Title	Displayed up to 85 characters		
	Day & Night	Auto (ICR)		
	Backlight Compensation	BLC, WDR, SSDR		

Items		Description	
		QND-6072R/6082R	QNV-6072R/6082R / QNO-6072R/6082R
Operational	Wide Dynamic Range	120dB	
	Digital Noise Reduction	SSNR	
	Motion Detection	4ea, rectangular zones	
	Privacy Masking	6ea, rectangular zones	
	Gain Control	Low / Middle / High	
	White Balance	ATW / AWC / Manual / Indoor / Outdoor	
	LDC	Support	
	Electronic Shutter Speed	Minimum / Maximum / Anti flicker (1/5~1/12,000sec)	
	Video Rotation	Flip, Mirror, Hallway (90° / 270°)	
	Analytics	Defocus detection, Directional detection, Motion detection, Enter/Exit, Tampering, Virtual line	
	Alarm I/O	Input 1ea / Output 1ea	
	Alarm Triggers	Analytics, Network Disconnect, Alarm input	
	Alarm events	• File upload via FTP, E-Mail • Notification via E-Mail • SD/SDHC/SDXC or NAS recording at event triggers • Alarm output	
	Audio In	Built-in mic Supply voltage: 2.5VDC(4mA), Input impedance: 2K Ohm	Selectable(mic in/line in) Supply voltage: 2.5VDC(4mA), Input impedance: 2K Ohm
Network	Ethernet	RJ-45 (10/100BASE-T)	
	Video Compression Format	H.265/H.264 : Main/High, MJPEG	
	Resolution	1920 x 1080, 1280 x 960, 1280 x 720, 800 x 600, 800 x 448, 720 x 576, 720 x 480, 640 x 480, 640 x 360	
	Max. Framerate	H.265/H.264 : Max. 30fps/25fps (60Hz/50Hz) MJPEG : Max. 15fps/12fps (60Hz/50Hz)	
	Smart Codec	WiseStreamⅢ	
	Video Quality Adjustment	H.264/H.265 : Target Bitrate Level Control MJPEG : Quality Level control	

Items		Description		
		QND-6072R/6082R	QNV-6072R/6082R	QNO-6072R/6082R
Network	Bitrate Control Method	H.264/H.265 : CBR or VBR Motion JPEG : VBR		
	Streaming	Unicast(6 users) / Multicast Multiple streaming (Up to 3 profiles)		
	Audio Compression	G.711 μ-law / G.726 Selectable G.726 (ADPCM) 8KHz, G.711 8KHz G.726 : 16Kbps, 24Kbps, 32Kbps, 40Kbps		
	Protocol	IPv4, IPv6, TCP/IP, UDP/IP, RTP(UDP), RTP(TCP), RTCP, RTSP, NTP, HTTP, HTTPS, SSL/TLS, DHCP, FTP, SMTP, ICMP, IGMP, SNMPv1/v2c/v3(MIB-2), ARP, DNS, DDNS, QoS, UPnP, Bonjour, LLDP		
	Security	HTTPS(SSL) Login Authentication Digest Login Authentication IP Address Filtering User access Log 802.1x Authentication (EAP-TLS, EAP-LEAP)		
	Edge Storage	Micro SD/SDHC/SDXC 1slot 128GB		
	Application Programming Interface	ONVIF Profile S/G/T SUNAPI(HTTP API) Wisenet open platform		
	Webpage Language	English, Korean, French, German, Spanish, Italian, Chinese, Russian, Japanese, Swedish, Portuguese, Czech, Polish, Turkish, Dutch, Hungarian, Greek		
	Web Viewer	Supported OS : Windows 7, 8.1, 10, Mac OS X 10.12, 10.13, 10.14 Recommended browser: Google Chrome Supported web browsers : MS Explore11, MS Edge, Mozilla Firefox(Window 64bit only), Apple Safari(Mac OS X only)		
	Memory	512MB RAM, 256MB Flash		
Environmental	Operating Temperature / Humidity	-10°C ~ +55°C (14°F ~ +131°F) / Less than 90% RH	-30°C ~ +55°C (-40°F ~ +131°F) / Less than 90% RH * Start up should be done at above -20°C	
	Storage Temperature / Humidity	-30°C ~ +60°C (-22°F ~ +140°F) / Less than 90% RH		
	Certification	-	IP66, IK10	

Items		Description		
		QND-6072R/6082R	QNV-6072R/6082R	QNO-6072R/6082R
Electrical	Electrical	PoE(IEEE802.3af, Class3), 12VDC		
	Power Consumption	PoE: Max 7.5 W, typical 6 W 12VDC: Max 6.5 W, typical 5.1 W	PoE: Max 7.5 W, typical 6 W 12VDC: Max 6.5 W, typical 5.1 W	PoE: Max 7.4 W, typical 5.4 W 12VDC: Max 6.5 W, typical 4.8 W
Mechanical	Color / Material	White / Plastic	White / Aluminum	Dark grey / Aluminum
	RAL Code	RAL9003	RAL9003	-
	Product dimensions / Weight	Ø119.8 x 98.8mm (Ø4.72 x 3.89"), 320 g	Ø137.0x106.1mm (Ø5.39x4.18"), 710 g	QNO-6072R: Ø70.0x246.0mm (Ø4.33x3.39"), 730g QNO-6082R: Ø78.0x259.8mm (Ø3.07x10.2"), 900 g

PRODUCT OVERVIEW (QND-6012R/6022R/6032R/6072R/6082R)

QND-6012R/6022R/6032R

Unit : mm (inch)

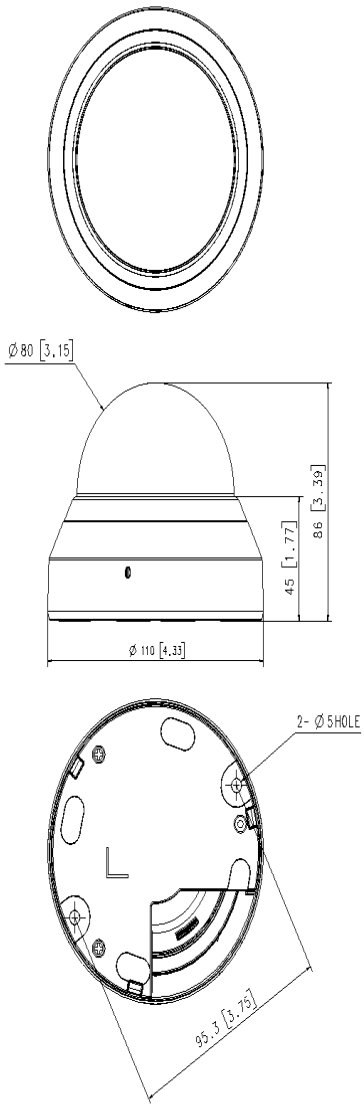

QND-6072R/6082R

Unit : mm (inch)

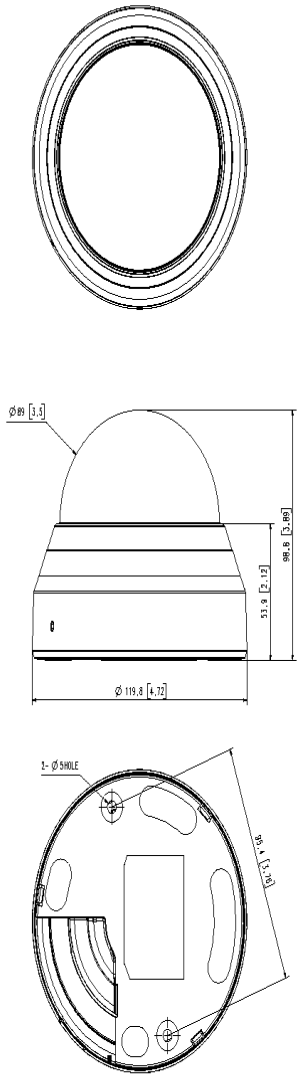

PRODUCT OVERVIEW (QNO-6012R/6022R/6032R/6072R/6082R)

QNO-6012R/6022R/6032R/6072R

Unit : mm (inch)

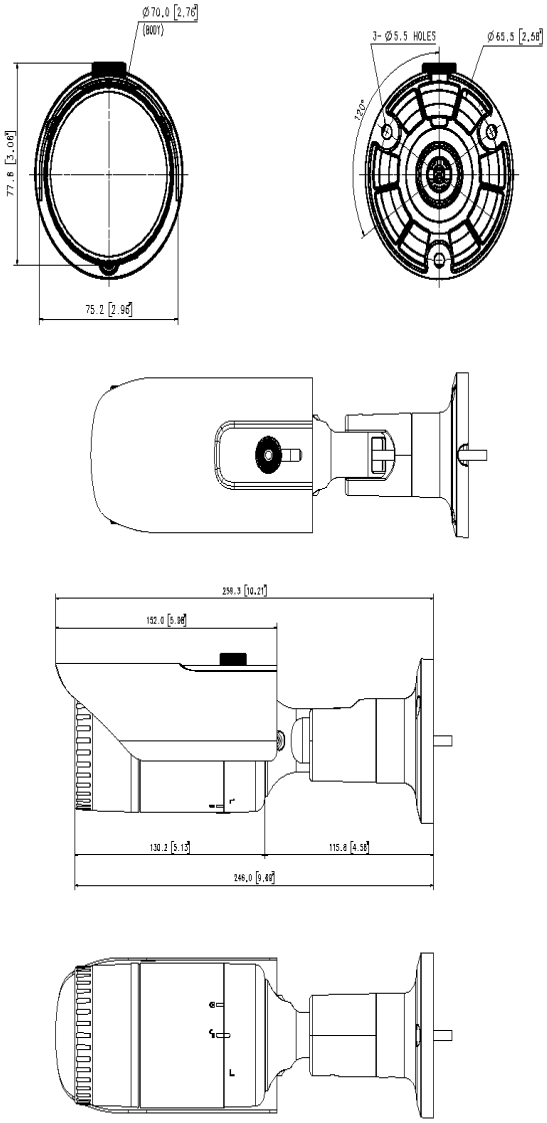

QNO-6082R

Unit : mm (inch)

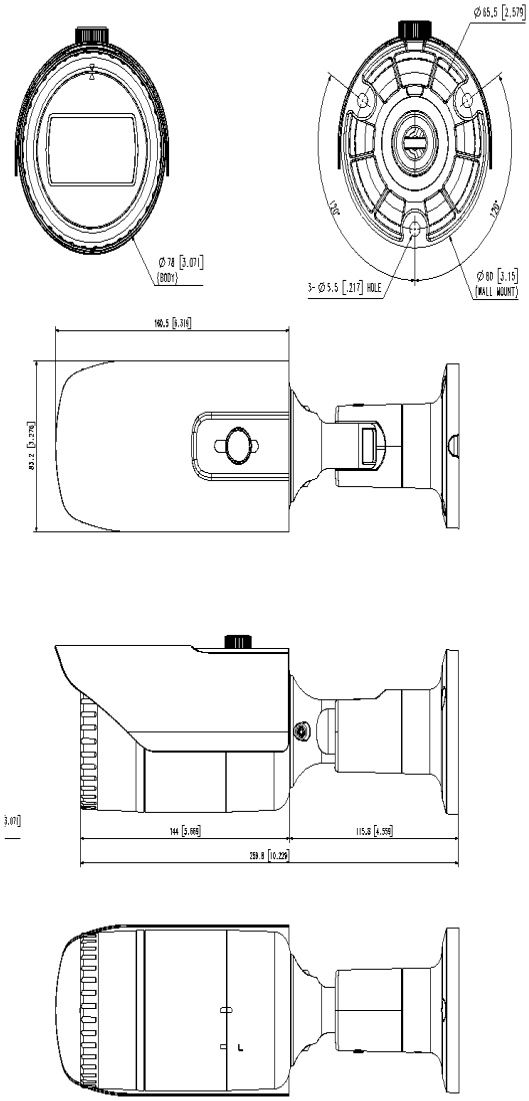

PRODUCT OVERVIEW (QNV-6012R/6022R/6032R/6072R/6082R)

QNV-6012R/6022R/6032R

Unit : mm (inch)

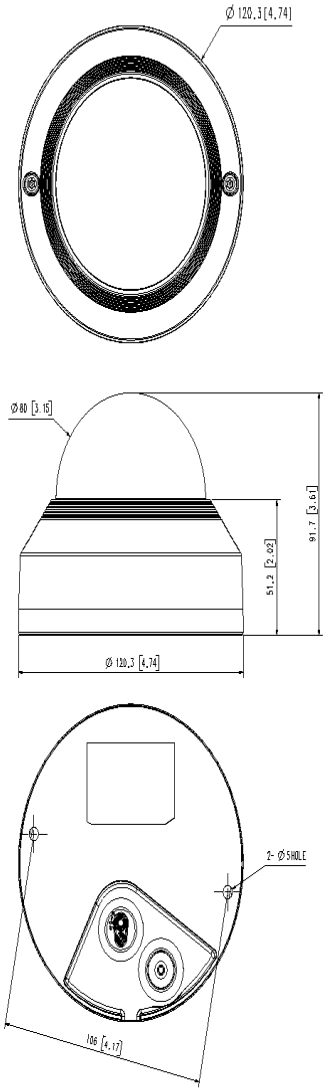

QNV-6072R/6082R

Unit : mm (inch)

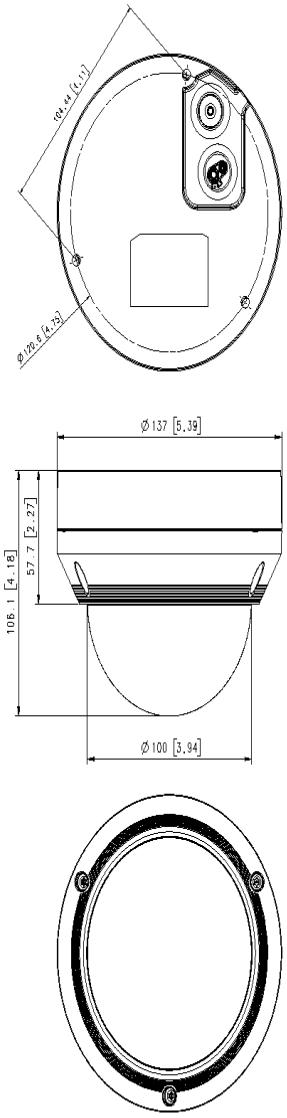

TROUBLESHOOTING

PROBLEM	SOLUTION
When an Windows 10 user accesses the web viewer through Chrome or Firefox, the sound volume of microphone changes periodically.	• This is what happens when microphone driver has been set to Realtek driver. Install the High Definition Audio device (Windows Default Driver) or the third party driver as the microphone driver.
No video is displayed when accessing the plug-in free webviewer on Safari via HTTPS.	• On the authentication popup window prompted when initially accessing https, click "View Authentication Certificate" and select the "Always trust when connecting to the designated webviewer IP" check box. • If the webviewer continues failing to display a video after you select "Next" on the message window below, press the command key + Q to exit the Safari browser, access again and follow the procedures stated above.
I can't access the camera from a web browser.	• Check to make sure that the camera's Network settings are appropriate. • Check to make sure that all network cables have been connected properly. • If connected using DHCP, verify that the camera is able to acquire dynamic IP addresses without any problem. • If the camera is connected to a Broadband Router, verify that port forwarding is properly configured.
Viewer got disconnected during monitoring.	• Connected Viewers become disconnected upon any change to camera or network configurations. • Check all network connections.
No video is displayed when I newly access the webviewer or connect streaming to the client.	• The maximum number of profiles available is 3. The connection may be lost if you use 4 or more of profiles. Example) If you access MJPEG, H264 and H265 and then access with a different profile, the connection will be lost.
The camera connected to the network is not detected in the IP installer program.	• Turn off the firewall settings on your PC and then search the camera again.
Images overlap.	• Check whether two or more cameras are set to a single multicast address instead of different addresses. If a single address is used for multiple cameras, the images may overlap.
No image appears.	• If the transmission method is set to multicast, check whether there is a router that supports multicast in the LAN the camera is connected to.
Voice is not recorded even though audio input settings are configured.	• You must enable the <Audio In> check box in <Basic> - <Video Profile>.

PROBLEM	SOLUTION
<Motion detection> of <Analytics> is set to <Enable>, but no notification e-mail reaches me even when an analysis event had occurred.	• Verify the settings in the following sequence: A. Check <Data & Time> settings. B. The <Motion detection> should be set to <Enable>. C. Check if the <E-mail> option of <Event setup> menu is checked to use.
Cannot record into the Micro SD memory card.	• Check if the memory card is detective.
Micro SD memory card is inserted but the camera does not operate properly.	• Check if the memory card is inserted in the proper direction. Operation of memory card that is formatted by other devices is not guaranteed with this camera unit • Format the memory card again in <Setup> → <Event> → <Storage> menu.
Cannot record in the NAS.	• Confirm that the information registered in the NAS is correct.
It reports that NAS setting has failed.	• Confirm that the IP address of the NAS is valid. • Confirm that the ID/password of the NAS is valid. • Confirm that you can access the folder designated as the default folder using the ID of the NAS. • Confirm that the NAS SMB/CIFS items are unchecked. • Confirm that the NAS IP address and the camera IP address are in the same format. ex) The NAS & camera subnet mask initial value is 255.255.255.0. If the IP address is 192.168.20.32 then the NAS IP address should be in the range of 192.168.20.1~192.168.20.255. • Check whether you tried to access as another user without formatting the default folder saved or used. • Confirm that you used recommended NAS equipment.

OPEN SOURCE ANNOUNCEMENT

GPL/LGPL software license

The software included in this product contains copyrighted software that is licensed under the GPL/LGPL. You may obtain the complete Corresponding Source code from us for a period of three years after our last shipment of this product by sending email to help.cctv@hanwha.com

If you want to obtain the complete Corresponding Source code in the physical medium such as CD-ROM, the cost of physically performing source distribution might be charged.

GPL SW

Component Name	License	URL
Base Kernel	GPL 2.0	
Busybox	GPL 2.0	http://www.busybox.net/downloads/snapshots
iproute2-4.3.0	GPL 2.0	
iptables-1.4.21	GPL 2.0	http://ftp.netfilter.org/pub/iptables
ethtool-4.2	GPL 2.0	
mtd-1.5.2	GPL 2.0	ftp://ftp.infradead.org/pub/mtd-utils
mii-diag-2.11	GPL 2.0	
rp-pppoe-3.11	GPL 2.0	http://www.roaringpenguin.com/pppoe/
wpa_supplicant-2.5	GPL 2.0	
bash-4.3.30	GPL 3.0	
zeroconf	GPL 2.0	

LGPL SW

Component Name	License	URL
gLibc	LGPL 2.0	
Inetutils	LGPL 3.0	
neon-0.29.6	LGPL 2.0	http://www.webdav.org/neon/

GNU GENERAL PUBLIC LICENSE

Version 2, June 1991

Copyright (C)1989, 1991 Free Software Foundation, Inc. 51 Franklin Street,Fifth Floor. Boston, MA 02110-1301, USA

Everyone is permitted to copy and distribute verbatim copies of this license document, but changing it is not allowed.

Preamble

The licenses for most software are designed to take away your freedom to share and change it. By contrast. the GNU General Public License is intended to guarantee your freedom to share and change free software-- to make sure the software is free for all its users. This General Public License applies to most of the Free Software Foundation's software and to any other program whose authors commit to using it. (Some other Free Software Foundation software is covered by the GNU Lesser General Public License instead.) You can apply it to your programs, too. When we speak of free software, we are referring to freedom, not price. Our General Public Licenses are designed to make sure that you have the freedom to distribute copies of free software (and charge for this service if you wish), that you receive source code or can get it if you want it, that you can change the software or use pieces of it in new free programs ; and that you know you can do these things.

To protect your rights, we need to make restrictions that forbid anyone to deny you these rights or to ask you to surrender the rights. These restrictions translate to certain responsibilities for you if you distribute copies of the software, or if you modify it.

For example, if you distribute copies of such a program, whether gratis or for a fee, you must give the recipients all the rights that you have.

You must make sure that they, too, receive or can get the source code. And you must show them these terms so they know their rights. We protect your rights with two steps :

(1)copyright the software, and (2)offer you this license which gives you legal permission to copy, distribute and/or modify the software. Also. for each author's protection and ours, we want to make certain that everyone understands that there is no warranty for this free software. If the software is modified by someone else and passed on, we want its recipients to know that what they have is not the original, so that any problems introduced by others will not reflect on the original authors' reputations.

Finally, any free program is threatened constantly by software patents. We wish to avoid the danger that redistributors of a free program will individually obtain patent licenses, in effect making the program proprietary. To prevent this, we have made it clear that any patent must be licensed for everyone's free use or not licensed at all. The precise terms and conditions for copying, distribution and modification follow.

TERMS AND CONDITIONS FOR COPYING, DISTRIBUTION AND MODIFICATION

Version 2, June 1991 Copyright (C) 1989, 1991 Free Software Foundation, Inc. 51 Franklin S

0. This License applies to any program or other work which contains a notice placed by the copyright holder saying it may be distributed under the terms of this General Public License.

The "Program", below, refers to any such program or work, and a "work based on the Program" means either the Program or any derivative work under copyright law : that is to say, a work containing the Program or a portion of it, either verbatim or with modifications and/or translated into another language. (Hereinafter. translation is included without limitation in the term "modification".) Each licensee is addressed as "you".
Activities other than copying. distribution and modification are not covered by this License ; they are outside its scope. The act of running the Program is not restricted, and the output from the Program is covered only if its contents constitute a work based on the Program (independent of having been made by running the Program). Whether that is true depends on what the Program does.

1. You may copy and distribute verbatim copies of the Program's source code as you receive it. in any medium, provided that you conspicuously and appropriately publish on each copy an appropriate copyright notice and disclaimer of warranty; keep intact all the notices that refer to this License and to the absence of any warranty ; and give any other recipients of the Program a copy of this License along with the Program.
You may charge a fee for the physical act of transferring a copy, and you may at your option offer warranty protection in exchange for a fee.

2. You may modify your copy or copies of the Program or any portion of it, thus forming a work based on the Program. and copy and distribute such modifications or work under the terms of Section 1 above. provided that you also meet all of these conditions :

a) You must cause the modified files to carry prominent notices stating that you changed the files and the date of any change.

b) You must cause any work that you distribute or publish, that in whole or in part contains or is derived from the Program or any part thereof. to be licensed as a whole at no charge to all third parties under the terms of this License.

c) If the modified program normally reads commands interactively when run,you must cause it, when started running for such interactive use in the most ordinary way, to print or display an announcement including an appropriate copyright notice and a notice that there is no warranty (or else. saying that you provide a warranty) and that users may redistribute the program under these conditions, and telling the user how to view a copy of this License. (Exception:if the Program itself is interactive but does not normally print such an announcement, your work based on the Program is not required to print an announcement.)

These requirements apply to the modified work as a whole. If identifiable sections of that work are not derived from the Program, and can be reasonably considered independent and separate works in themselves, then this License, and its terms, do not apply to those sections when you distribute them as separate works. But when you distribute the same sections as part of a whole which is a work based on the Program, the distribution of the whole must be on the terms of this License, whose permissions for other licensees extend to the entire whole, and thus to each and every part regardless of who wrote it.

Thus, it is not the intent of this section to claim rights or contest your rights to work written entirely by you : rather, the intent is to exercise the right to control the distribution of derivative or collective works based on the Program. In addition. mere aggregation of another work not based on the Program with the Program (or with a work based on the Program)on a volume of a storage or distribution medium does not bring the other work under the scope of this License.

3. You may copy and distribute the Program (or a work based on it. under Section 2)in object code or executable form under the terms of Sections 1 and 2 above provided that you also do one of the following :

a) Accompany it with the complete corresponding machine-readable source code. which must be distributed under the terms of Sections 1 and 2 above on a medium customarily used for software interchange : or.

b) Accompany it with a written offer. valid for at least three years. to give any third party, for a charge no more than your cost of physically performing source distribution, a complete machinereadable copy of the corresponding source code. to be distributed under the terms of Sections 1 and 2 above on a medium customarily used for software interchange : or.

c) Accompany it with the information you received as to the offer to distribute corresponding source code. (This alternative is allowed only for noncommercial distribution and only if you received the program in object code or executable form with such an offer, in accord with Subsection b above.) The source code for a work means the preferred form of the work for making modifications to it. For an executable work, complete source code means all the source code for all modules it contains, plus any associated interface definition files, plus the scripts used to control compilation and installation of the executable. However, as a special exception, the source code distributed need not include anything that is normally distributed (in either source or binary form) with the major

components (compiler. kernel, and so on) of the operating system on which the executable runs, unless that component itself accompanies the executable. If distribution of executable or object code is made by offering access to copy from a designated place, then offering equivalent access to copy the source code from the same place counts as distribution of the source code. even though third parties are not compelled to copy the source along with the object code.

4. You may not copy, modify, sublicense, or distribute the Program except as expressly provided under this License. Any attempt otherwise to copy. modify. sublicense or distribute the Program is void, and will automatically terminate your rights under this License.

However. parties who have received copies, or rights, from you under this License will not have their licenses terminatedso long as such parties remain in full compliance.

5. You are not required to accept this License, since you have not signed it. However, nothing else grants you permission to modify or distribute the Program or its derivative works.

These actions are prohibited by law if you do not accept this License.Therefore, by modifying or distributing the Program (or any work based on the Program), you indicate your acceptance of this License to do so, and all its terms and conditions for copying, distributing or modifying the Program or works based on it.

6. Each time you redistribute the Program (or any work based on the Program), the recipient automatically receives a license from the original licensor to copy, distribute or modify the Program subject to these terms and conditions. You may not impose any further restrictions on the recipients' exercise of the rights granted herein. You are not responsible for enforcing compliance by third parties to this License.

7. If, as a consequence of a court judgment or allegation of patent infringement or for any other reason (not limited to patent issues), conditions are imposed on you (whether by court order, agreement or otherwise)that contradict the conditions of this License. they do not excuse you from the conditions of this License. If you cannot distribute so as to satisfy simultaneously your obligations under this License and any other pertinent obligations, then as a consequence you may not distribute the Program at all.

For example, if a patent license would not permit royaltyfree redistribution of the Program by all those who receive copies directly or indirectly through you. then the only way you could satisfy both it and this License would be to refrain entirely from distribution of the Program.

If any portion of this section is held invalid or unenforceable under any particular circumstance. the balance of the section is intended to apply and the section as a whole is intended to apply in other circumstances. It is not the purpose of this section to induce you to infringe any patents or other property right claims or to contest validity of any such claims: this section has the sole purpose of protecting the integrity of the free software distribution system. which is implemented by public license practices. Many people have made generous contributions to the wide range of software distributed through that system in reliance on consistent application of that system ; it is up to the author/donor to decide if he or she is willing to distribute software through any other system and a licensee cannot impose that choice. This section is intended to make thoroughly clear what is believed to be a consequence of the rest of this License.

8. If the distribution and/or use of the Program is restricted in certain countries either by patents or by copyrighted interfaces, the original copyright holder who places the Program under this License may add an explicit geographical distribution limitation excluding those countries,so that distribution is permitted only in or among countries not thus excluded. In such case, this License incorporates the limitation as if written in the body of this License.

9. The Free Software Foundation may publish revised and/or new versions of the General Public License from time to time. Such new versions will be similar in spirit to the present version, but may differ in detail to address new problems or concerns. Each version is given a distinguishing version number. If the Program specifies a version number of this License which applies to it and "any later version", you have the option of following the terms and conditions either of that version or of any later version published by the Free Software Foundation. If the Program does not specify a version number of this License. you may choose any version ever published by the Free Software Foundation.

10. If you wish to incorporate parts of the Program into other free programs whose distribution conditions are different. write to the author to ask for permission. For software which is copyrighted by the Free Software Foundation,write to the Free Software Foundation : we sometimes make exceptions for this. Our decision will be guided by the two goals of preserving the free status of all derivatives of our free software and of promoting the sharing and reuse of software generally.

NO WARRANTY

11. BECAUSE THE PROGRAM IS LICENSED FREE OF CHARGE, THERE IS NO WARRANTY FOR THE PROGRAM, TO THE EXTENT PERMITTED BY APPLICABLE LAW. EXCEPT WHEN OTHERWISE STATED IN WRITING THE COPYRIGHT HOLDERS AND/OR OTHER PARTIES PROVIDE THE PROGRAM "ASIS" WITHOUT WARRANTY OF ANY KIND, EITHER EXPRESSED OR IMPLIED. INCLUDING, BUT NOT LIMITED TO, THE IMPLIED WARRANTIES OF MERPCHANTABILITY AND FITNESS FOR A PARTICULAR PURPOSE. THE ENTIRE RISK AS TO THE QUALITY AND PERFORMANCE OF THE PROGRAM IS WITH YOU. SHOULD THE PROGRAMPROVE DEFECTIVE, YOU ASSUME THE COST OF ALL NECESSARY SERVICING, REPAIR OR CORRECTION.

12. IN NO EVENT UNLESS REQUIRED BY APPLICABLE LAW OR AGREED TO IN WRITING WILL ANY COPYRIGHT HOLDER, OR ANY OTHER PARTY WHO MAY MODIFY AND/OR REDISTRIBUTE DAMAGES, INCLUDING ANY GENERAL, SPECIAL, INCIDENTAL OR CONSEQUENTIAL DAMAGES ARISING OUT OF THE USE OR INABILITY TO USE THE PROGRAM (INCLUDING BUT NOT LIMITED TO LOSS OF DATA OR DATA BEING RENDERED INACCURATE OR LOSSES SUSTAINED BY YOU OR THIRD PARTIES OR A FAILURE OF THE PROGRAM TO OPERATE WITH ANY OTHER PROGRAMS), EVEN IF SUCH HOLDER OR OTHER PARTY HAS BEEN ADVISED OF THE POSSIBILITY OF SUCH DAMAGES.

END OF TERMS AND CONDITIONS

How to Apply These Terms to Your New Programs If you develop a new program, and you want it to be of the greatest possible use to the public, the best way to achieve this is to make it free software which everyone can redistribute and change under these terms. To do so, attach the following notices to the program. It is safest to attach them to the start of each source file to most effectively convey the exclusion of warranty ; and each file should have at least the "copyright" line and a pointer to where the full notice is found.one line to give the program's name and an idea of what it does.

Copyright (C)yyyy name of author

This program is free software ; you can redistribute it and/or modify it under the terms of the GNU General Public License as published by the Free Software Foundation : either version 2 of the License, or (at your option)any later version.

This program is distributed in the hope that it will be useful. but WITHOUT ANY WARRANTY ; without even the implied warranty of MERCHANTABILITY or FITNESS FOR A PARTICULAR PURPOSE. See the GNU General Public License for more details.

You should have received a copy of the GNU General Public License along with this program ; if not, write to the Free Software Foundation, Inc.,51 Franklin Street, Fifth Floor, Boston, MA 02110-1301, USA.
Also add information on how to contact you by electronic and paper mail. If the program is interactive, make it output a short notice like this when it starts in an interactive mode :

Gnomovision version 69, Copyright (C) year name of author Gnomovision comes with ABSOLUTELY NO WARRANTY ; for details type 'show w'. This is free software, and you are welcome to redistribute it under certain conditions ; type 'show c' for details.

The hypothetical commands 'show w' and 'show c' should show the appropriate parts of the General Public License. Of course, the commands you use may be called something other than 'show w' and 'show c' : they could even be mouse-clicks or menu items-- whatever suits your program.

You should also get your employer (if you work as a programmer)or your school, if any, to sign a "copyright disclaimer" for the program,if necessary. Here is a sample ; alter the names:

Yoyodyne, Inc.,hereby disclaims all copyright interest in the program 'Gnomovision' (which makes passes at compilers) written by James Hacker. signature of Ty Coon. 1 April 1989 Ty Coon, President of Vice This General Public License does not permit incorporating your program into proprietary programs. If your program is a subroutine library. you may consider it more useful to permit linking proprietary applications with the library. If this is Lwihcaetn ysoeu want to do, use the GNU Lesser General Public instead of this License.

GNU GENERAL PUBLIC LICENSE

Version 3, 29 June 2007

Copyright (C) 2007 Free Software Foundation, Inc. <http://fsf.org/>

Everyone is permitted to copy and distribute verbatim copies of this license document, but changing it is not allowed.

Preamble

The GNU General Public License is a free, copyleft license for software and other kinds of works. The licenses for most software and other practical works are designed to take away your freedom to share and change the works. By contrast, the GNU General Public License is intended to guarantee your freedom to share and change all versions of a program-- to make sure it remains free software for all its users.

We, the Free Software Foundation, use the GNU General Public License for most of our software; it applies also to any other work released this way by its authors.

You can apply it to your programs, too. When we speak of free software, we are referring to freedom, not price. Our General Public Licenses are designed to make sure that you have the freedom to distribute copies of free software (and charge for them if you wish), that you receive source code or can get it if you want it. that you can change the software or use pieces of it in new free programs, and that you know you can do these things.

To protect your rights, we need to prevent others from denying you these rights or asking you to surrender the rights. Therefore, you have certain responsibilities if you distribute copies of the software, or if you modify it: responsibilities to respect the freedom of others. For example, if you distribute copies of such a program, whether gratis or for a fee, you must pass on to the recipients the same freedoms that you received. You must make sure that they, too, receive or can get the source code. And you must show them these terms so they know their rights. Developers that use the GNU GPL protect your rights with two steps: (1) assert copyright on the software, and (2) offer you this License giving you legal permission to copy, distribute and/or modify it. For the developers' and authors' protection, the GPL clearly explains that there is no arranty for this free software. For both users' and authors' sake, the GPL requires that modified versions be marked as changed. so that their problems will not be attributed erroneously to authors of previous versions. Some devices are designed to deny users access to install or run modified versions of the software inside them, although the manufacturer can do so. This is fundamentally incompatible with the aim of protecting users' freedom to change the software. The systematic pattern of such abuse occurs in the area of products for individuals to use, which is precisely where it is most unacceptable. Therefore, we have designed this version of the GPL to prohibit the practice for those products. If such problems arise substantially in other domains, we stand ready to extend this provision to those domains in future versions of the GPL, as needed to protect the freedom of users.

Finally, every program is threatened constantly by software patents. States should not allow patents to restrict development and use of software on general-purpose ornputers, but in those that do, we wish to avoid the special anger that patents applied to a free program could make it ffectively proprietary. To prevent this, the GPL assures that atents cannot be used to render the program non-free. he precise terms and conditions for copying. distribution and modification follow.

TERMS AND CONDITIONS

0. Definitions.

"This License" refers to version 3 of the GNU General Public License.
Copyright' also means copyright-like laws that apply to other kinds of works. such as semiconductor masks. "The Program" refers to any copyrightable work licensed under this License. Each licensee is addressed as "you". "Licensees" and "recipients' may be individuals or organizations.

To "modify" a work means to copy from or adapt all or part of the work in a fashion requiring copyright permission, other than the making of an exact copy. The resulting work is called a "modified version" of the earlier work or a work "based on" the earlier work.

A "covered work" means either the unmodified Program or a work based on the Program.

To "propagate" a work means to do anything with it that, without permission, would make you directly or secondarily liable for infringement under applicable copyright law, except executing it on a computer or modifying a private copy.

Propagation includes copying. distribution (with or without modification), making available to the public, and in some countries other activities as well.

To "convey" a work means any kind of propagation that enables other than the work as a whole, that (a) is included in the normal form of packaging a Major Component, but which is not part of that Major Component, and (b) serves only to enable use of the work with that Major Component, or to implement a Standard Interface for which an implementation is available to the public in source code form. A "Major Component". in this context, means a major essential component (kernel, window system. and so on) of the specific operating system (if any) on which the executable work runs, or a compilar used to produce the work, or an object code interpretar used to run it.

The "Corresponding Source" for a work in object code form means all the source code needed to generate, install, and (for an executable work) run the object code and to modify the work, including scripts to control those activities.

However, it does not include the work's System Libraries, or generalpurpose tools or generally available free programs which are used unmodified in performing those activities but which are not part of the work. For example. Corresponding Source includes interface definition files associated with source files for the work, and the source code for shared libraries and dynamically linked subprograms that the work is specifically designed to require. such as by intimate data communication or control flow between those subprograms and other parts of the work.

The Corresponding Source need not include anything that users can regenerate automatically from other parts of the Corresponding Source. The Corresponding Source for a work in source code form is that same work.

2. Basic Permissions.

All rights granted under this License are granted for the term of copyright on the Program, and are irrevocable provided the stated conditions are met. This License explicitly affirms your unlimited permission to run the unmodified Program. The output from running a covered work is covered by this License only if the output, given its content, constitutes a covered work. This License acknowledges your rights of fair use or other equivalent, as provided by copyright law.

You may make, run and propagate covered works that you do not convey, without conditions so long as your license otherwise remains in force. You may convey covered works to others for the sole purpose of having them make modifications exclusively for you, or provide you with facilities for running those works, provided that you comply with the terms of this License in conveying all material for which you do not control copyright. Those thus making or running the covered works for you must do so exclusively on your behalf, under your direction and control, on terms that prohibit them from making any copies of your copyrighted material outside their relationship with you. Conveying under any other circumstances is permitted solely under the conditions stated below. Sublicensing is not allowed; section 10 makes it unnecessary.

3. Protecting Users' Legal Rights From anti-Circumvention Law.

No covered work shall be deemed part of an effective technological measure under any applicable law fulfilling obligations under article 11 of the WIPO copyright treaty adopted on 20 December 1996, or similar laws prohibiting or restricting circumvention of such measures.

When you convey a covered work, you waive any legal power to forbid circumvention of technological measures to the extent such circumvention is effected by exercising rights under this License with respect to the covered work, and you disclaim any intention to limit operation or modification of the work as a means of enforcing, against the work's users, your or third parties' legal rights to forbid circumvention of technological measures.

4. Conveying Verbatim Copies.

You may convey verbatim copies of the Program's source code as you receive it, in any medium, provided that you conspicuously and appropriately publish on each copy an appropriate copyright notice; keep intact all notices stating that this License and any non-permissive terms added in accord with section 7 apply to the code; keep intact all notices of the absence of any warranty; and give all recipients a copy of this License along with the Program. You may charge any price or no price for each copy that you convey, and you may offer support or warranty protection for a fee.

5. Conveying Modified Source Versions.

You may convey a work based on the Program, or the modifications to produce it from the Program, in the form of source code under the terms of section 4, provided that you also meet all of these conditions:

a) The work must carry prominent notices stating that you modified it, and giving a relevant date.

b) The work must carry prominent notices stating that it is released under this License and any conditions added under section 7. This requirement modifies the requirement in section 4 to "keep intact all notices".

c) You must license the entire work, as a whole, under this License to anyone who comes into possession of a copy. This License will therefore apply, along with any applicable section 7 additional terms, to the whole of the work, and all its parts, regardless of how they are packaged. This License gives no permission to license the work in any other way, but it does not invalidate such permission if you have separately received it.

d) If the work has interactive user interfaces, each must display Appropriate Legal Notices; however, if the Program has interactive interfaces that do not display Appropriate Legal Notices, your work need not make them do so. A compilation of a covered work with other separate and independent works, which are not by their nature extensions of the covered work, and which are not combined with it such as to form a larger program, in or on a volume of a storage or distribution medium, is called an "aggregate" if the compilation and its resulting copyright are not used to limit the access or legal rights of the compilation's users beyond what the individual works permit. Inclusion of a covered work in an aggregate does not cause this License to apply to the other parts of the aggregate.

6. Conveying Non-Source Forms.

You may convey a covered work in object code form under the terms of sections 4 and 5, provided that you also convey the machine-readable Corresponding Source under the terms of this License, in one of these ways:

a) Convey the object code in, or embodied in, a physical product (including a physical distribution medium), accompanied by the Corresponding Source fixed on a durable physical medium customarily used for software interchange.

b) Convey the object code in, or embodied in, a physical product (including a physical distribution medium), accompanied by a written offer, valid for at least three years and valid for as long as you offer spare parts or customer support for that product model, to give anyone who possesses the object code either (1) a copy of the Corresponding Source for all the software in the product that is covered by this License, on a durable physical medium customarily used for software interchange, for a price no more than your reasonable cost of physically performing this conveying of source, or (2) access to copy the Corresponding Source from a network server at no charge.

c) Convey individual copies of the object code with a copy of the written offer to provide the corresponding Source. This alternative is allowed only occasionally and noncommercially, and only if you received the object code with such an offer, in accord with subsection 6b.

d) Convey the object code by offering access from a designated place (gratis or for a charge), and offer equivalent access to the Corresponding Source in the same way through the same place at no further charge. You need not require recipients to copy the Corresponding Source along with the object code. If the place to copy the object code is a network server, the Corresponding Source may be on a different server (operated by you or a third party) that supports equivalent copying facilities, provided you maintain clear directions next to the object code saying where to find the Corresponding Source. Regardless of what server hosts the Corresponding Source, you remain obligated to ensure that it is available for as long as needed to satisfy these requirements.

e) Convey the object code using peer-to-peer transmission, provided you inform other peers where the object code and Corresponding Source of the work are being offered to the general public at no charge under subsection 6d. A separable portion of the object code, whose source code is excluded from the Corresponding Source as a System Library, need not be included in conveying the object code work. A "User Product" is either (1) a "consumer product", which means any tangible personal property which is normally used for personal, family, or household purposes, or (2) anything designed or sold for incorporation into a dwelling. In determining whether a product is a consumer product, doubtful cases shall be resolved in favor of coverage. For a particular product received by a particular user, "normally used" refers to a typical or common use of that class of product, regardless of the status of the particular user or of the way in which the particular user actually uses, or expects or is expected to use, the product. A product is a consumer product regardless of whether the product has substantial commercial, industrial or non-consumer uses, unless such uses represent the only significant mode of use of the product.

"Installation Information" for a User Product means any methods, procedures, authorization keys, or other information required to install and execute modified versions of a covered work in that User Product from a modified version of its Corresponding Source. The information must suffice to ensure that the continued functioning of the modified object code is in no case prevented or interfered with solely because modification has been made. If you convey an object code work under this section in, or with, or specifically for use in, a User Product, and the conveying occurs as part of a transaction in which the right of possession and use of the User Product is transferred to the recipient in perpetuity or for a fixed term (regardless of how the transaction is characterized), the Corresponding Source conveyed under this section must be accompanied by the Installation Information. But this requirement does not apply if neither you nor any third party retains the ability to install modified object code on the User Product (for example, the work has been installed in ROM).

The requirement to provide Installation Information does not include a requirement to continue to provide support service, warranty, or updates for a work that has been modified or installed by the recipient, or for the User Product in which it has been modified or installed. Access to a network may be denied when the modification itself materially and adversely affects the operation of the network or violates the rules and protocols for communication across the network. Corresponding Source conveyed, and Installation Information provided, in accord with this section must be in a format that is publicly documented (and with an implementation available to the public in source code form), and must require no special password or key for unpacking, reading or copying.

7. Additional Terms.

"Additional permissions" are terms that supplement the terms of this License by making exceptions from one or more of its conditions. Additional permissions that are applicable to the entire Program shall be treated as though they were included in this License, to the extent that they are valid under applicable law. If additional permissions apply only to part of the Program, that part may be used separately under those permissions, but the entire Program remains governed by this License without regard to the additional permissions. When you convey a copy of a covered work, you may at your option remove any additional permissions from that copy, or from any part of it. (Additional permissions may be written to require their own removal in certain cases when you modify the work.) You may place additional permissions on material, added by you to a covered work, for which you have or can give appropriate copyright permission. Notwithstanding any other provision of this License, for material you add to a covered work, you may (if authorized by the copyright holders of that material) supplement the terms of this License with terms:

a) Disclaiming warranty or limiting liability differently from the terms of sections 15 and 16 of this License; or

b) Requiring preservation of specified reasonable legal notices or author attributions in that material or in the Appropriate Legal Notices displayed by works containing it; or

c) Prohibiting misrepresentation of the origin of that material, or requiring that modified versions of such material be marked in reasonable ways as different from the original version; or

d) Limiting the use for publicity purposes of names of licensors or authors of the material; or

e) Declining to grant rights under trademark law for use of some trade names, trademarks, or service marks; or

f) Requiring indemnification of licensors and authors of that material by anyone who conveys the material (or modified versions of it) with contractual assumptions of liability to the recipient, for any liability that these contractual assumptions directly impose on those licensors and authors. All other non-permissive additional terms are considered "further restrictions" within the meaning of section 10. If the Program as you received it, or any part of it, contains a notice stating that it is governed by this License along with a term that is a further restriction, you may remove that term. If a license document contains a further restriction but permits relicensing or conveying under this License, you may add to a covered work material governed by the terms of that license document, provided that the further restriction does not survive such relicensing or conveying. If you add terms to a covered work in accord with this section, you must place, in the relevant source files, a statement of the additional terms that apply to those files, or a notice indicating where to find the applicable terms. Additional terms, permissive or non-permissive, may be stated in the form of a separately written license, or stated as exceptions; the above requirements apply either way.

8. Termination.

You may not propagate or modify a covered work except as expressly provided under this License. Any attempt otherwise to propagate or modify it is void, and will automatically terminate your rights under this License (including any patent licenses granted under the third paragraph of section 11).

However, if you cease all violation of this License, then your license from a particular copyright holder is reinstated (a) provisionally, unless and until the copyright holder explicitly and finally terminates your license, and (b) permanently, if the copyright holder fails to notify you of the violation by some reasonable means prior to 60 days after the cessation. Moreover, your license from a particular copyright holder is reinstated permanently if the copyright holder notifies you of the violation by some reasonable means, this is the first time you have received notice of violation of this License (for any work) from that copyright holder, and you cure the violation prior to 30 days after your receipt of the notice. Termination of your rights under this section does not terminate the licenses of parties who have received copies or rights from you under this License. If your rights have been terminated and not permanently reinstated, you do not qualify to receive new licenses for the same material under section 10.

9. Acceptance Not Required for Having Copies.

You are not required to accept this License in order to receive or run a copy of the Program. Ancillary propagation of a covered work occurring solely as a consequence of using peer-to-peer transmission to receive a copy likewise does not require acceptance. However, nothing other than this License grants you permission to propagate or modify any covered work. These actions infringe copyright if you do not accept this License. Therefore, by modifying or propagating a covered work, you indicate your acceptance of this License to do so.

10. Automatic Licensing of Downstream Recipients.

Each time you convey a covered work, the recipient automatically receives a license from the original licensors, to run, modify and propagate that work, subject to this License. You are not responsible for enforcing compliance by third parties with this License. An "entity transaction" is a transaction transferring control of an organization, or substantially all assets of one, or subdividing an organization, or merging organizations. If propagation of a covered work results from an entity transaction, each party to that transaction who receives a copy of the work also receives whatever licenses to the work the party's predecessor in interest had or could give under the previous paragraph, plus a right to possession of the Corresponding Source of the work from the predecessor in interest, if the predecessor has it or can get it with reasonable efforts. You may not impose any further restrictions on the exercise of the rights granted or affirmed under this License. For example, you may not impose a license fee, royalty, or other charge for exercise of rights granted under this License, and you may not initiate litigation (including a cross-claim or counterclaim in a lawsuit) alleging that any patent claim is infringed by making, using, selling, offering for sale, or importing the Program or any portion of it.

11. Patents.

A "contributor" is a copyright holder who authorizes use under this License of the Program or a work on which the Program is based. The work thus licensed is called the contributor's "contributor version". A contributor's "essential patent claims" are all patent claims owned or controlled by the contributor, whether already acquired or hereafter acquired, that would be infringed by some manner, permitted by this License, of making, using, or selling its contributor version, but do not include claims that would be infringed only as a consequence of further modification of the contributor version. For purposes of this definition, "control" includes the right to grant patent sublicenses in a manner consistent with the requirements of this License. Each contributor grants you a non-exclusive, worldwide, royalty-free patent license under the contributor's essential patent claims, to make, use, sell, offer for sale, import and otherwise run, modify and propagate the contents of its contributor version.

In the following three paragraphs, a "patent license" is any express agreement or commitment, however denominated, not to enforce a patent (such as an express permission to practice a patent or covenant not to sue for patent infringement). To "grant" such a patent license to a party means to make such an agreement or commitment not to enforce a patent against the party. If you convey a covered work, knowingly relying on a patent license, and the Corresponding Source of the work is not available for anyone to copy, free of charge and under the terms of this License, through a publicly available network server or other readily accessible means, then you must either (1) cause the Corresponding Source to be so available, or (2) arrange to deprive yourself of the benefit of the patent license for this particular work, or (3) arrange, in a manner consistent with the requirements of this License, to extend the patent license to downstream recipients. "Knowingly relying" means you have actual knowledge that, but for the patent license, your conveying the covered work in a country, or your recipient's use of the covered work in a country, would infringe one or more identifiable patents in that country that you have reason to believe are valid. If, pursuant to or in connection with a single transaction or arrangement, you convey, or propagate by procuring conveyance of, a covered work, and grant a

patent license to some of the parties receiving the covered work authorizing them to use, propagate, modify or convey a specific copy of the covered work, then the patent license you grant is automatically extended to all recipients of the covered work and works based on it. A patent license is "discriminatory" if it does not include within the scope of its coverage, prohibits the exercise of, or is conditioned on the non-exercise of one or more of the rights that are specifically granted under this License. You may not convey a covered work if you are a party to an arrangement with a third party that is in the business of distributing software, under which you make payment to the third party based on the extent of your activity of conveying the work, and under which the third party grants, to any of the parties who would receive the covered work from you, a discriminatory patent license

(a) in connection with copies of the covered work conveyedby you (or copies made from those copies), or

(b) primarily for and in connection with specific products or compilations that contain the covered work, unless you entered into that arrangement, or that patent license was granted, prior to 28 March 2007. Nothing in this License shall be construed as excluding or limiting any implied license or other defenses to infringement that may otherwise be available to you under applicable patent law.

12. No Surrender of Others' Freedom.

If conditions are imposed on you (whether by court order, agreement or otherwise) that contradict the conditions of this License, they do not excuse you from the conditions of thisLicense. If you cannot convey a covered work so as to satisfy simultaneously your obligations under this License and any other pertinent obligations, then as a consequence you may not convey it at all. For example, if you agree to terms that obligate you to collect a royalty for further conveying from those to whom you convey the Program, the only way you could satisfy both those terms and this License would be to refrain entirely from conveying the Program.

13. Use with the GNU Affero General Public License.

Notwithstanding any other provision of this License, you have permission to link or combine any covered work with a work licensed under version 3 of the GNU Affero General Public License into a single combined work, and to convey the resulting work. The terms of this License will continue to apply to the part which is the covered work, but the special requirements of the GNU Affero General Public License, section 13, concerning interaction through a network will apply to the combination as such.

14. Revised Versions of this License.

The Free Software Foundation may publish revised and/ or new versions of the GNU General Public License from time to time. Such new versions will be similar in spirit to the present version, but may differ in detail to address new problems or concerns.

Each version is given a distinguishing version number. If the Program specifies that a certain numbered version of the GNU General Public License "or any later version" applies to it, you have the option of following the terms and conditions either of that numbered version or of any later version published by the Free Software Foundation. If the Program does not specify a version number of the GNU General Public License, you may choose any version ever published by the Free Software Foundation. If the Program specifies that a proxy can decide which future versions of the GNU General Public License can be used, that proxy's public statement of acceptance of a version permanently authorizes you to choose that version for the Program. Later license versions may give you additional or different permissions. However, no additional obligations are imposed on any author or copyright holder as a result of your choosing to follow a later version.

15. Disclaimer of Warranty.

THERE IS NO WARRANTY FOR THE PROGRAM, TO THE EXTENT PERMITTED BY APPLICABLE LAW. EXCEPT WHEN OTHERWISE STATED IN WRITING THE COPYRIGHT HOLDERS AND/OR OTHER PARTIES PROVIDE THE PROGRAM "AS IS" WITHOUT WARRANTY OF ANY KIND, EITHER EXPRESSED OR IMPLIED, INCLUDING, BUT NOT LIMITED TO, THE IMPLIED WARRANTIES OF MERCHANTABILITY AND FITNESS FOR A PARTICULAR PURPOSE. THE ENTIRE RISK AS TO THE QUALITY AND PERFORMANCE OF THE PROGRAM IS WITH YOU. SHOULD THE PROGRAM PROVE DEFECTIVE, YOU ASSUME THE COST OF ALL NECESSARY SERVICING, REPAIR OR CORRECTION.

16. Limitation of Liability.

IN NO EVENT UNLESS REQUIRED BY APPLICABLE LAW OR AGREED TO IN WRITING WILL ANY COPYRIGHT HOLDER, OR ANY OTHER PARTY WHO MODIFIES AND/OR CONVEYS THE PROGRAM AS PERMITTED ABOVE, BE LIABLE TO YOU FOR DAMAGES, INCLUDING ANY GENERAL, SPECIAL, INCIDENTAL OR CONSEQUENTIAL DAMAGES ARISING OUT OF THE USE OR INABILITY TO USE THE PROGRAM (INCLUDING BUT NOT LIMITED TO LOSS OF DATA OR DATA BEING RENDERED INACCURATE OR LOSSES SUSTAINED BY YOU OR THIRD PARTIES OR A FAILURE OF THE PROGRAM TO OPERATE WITH ANY OTHER PROGRAMS), EVEN IF SUCH HOLDER OR OTHER PARTY HAS BEEN ADVISED OF THE POSSIBILITY OF SUCH DAMAGES.

17. Interpretation of Sections 15 and 16.

If the disclaimer of warranty and limitation of liability provided above cannot be given local legal effect according to their terms, reviewing courts shall apply local law that most closely approximates an absolute waiver of all civil liability in connection with the Program, unless a warranty or assumption of liability accompanies a copy of the Program in return for a fee.

OpenSSL Combined License

The OpenSSL toolkit stays under a dual license, i.e. both the conditions of the OpenSSL License and the original SSLeay license apply to the toolkit.

See below for the actual license texts. Actually both licenses are BSD-style Open Source licenses. In case of any license issues related to OpenSSL please contact openssl-core@openssl.org.

Component Name	License	URL
openssl-1.0.2e	OpenSSL	Combined License http://www.openssl.org/source

Copyright (c) 1998-2011 The OpenSSL Project. All rights reserved.

Redistribution and use in source and binary forms, with or without modification, are permitted provided that the following conditions are met:

1. Redistributions of source code must retain the above copyright notice, this list of conditions and the following disclaimer.

2. Redistributions in binary form must reproduce the above copyright notice, this list of conditions and the following disclaimer in the documentation and/or other materials provided with the distribution.

3. All advertising materials mentioning features or use of this software must display the following acknowledgment: "This product includes software developed by the OpenSSL Projectfor use in the OpenSSL Toolkit. (http://www.openssl.org/)"

4. The names "OpenSSL Toolkit" and "OpenSSL Project" must not be used to endorse or promote products derived from this software without prior written permission. For written permission, please contact openssl-core@openssl.org.

5. Products derived from this software may not be called "OpenSSL" nor may "OpenSSL" appear in their names without prior written permission of the OpenSSL Project.

6. Redistributions of any form whatsoever must retain the following acknowledgment: "This product includes software developed by the OpenSSL Project for use in the OpenSSL Toolkit (http://www.openssl.org/)"

THIS SOFTWARE IS PROVIDED BY THE OpenSSL PROJECT "AS IS" AND ANY EXPRESSED OR IMPLIED WARRANTIES, INCLUDING, BUT NOT LIMITED TO, THE IMPLIED WARRANTIES OF MERCHANTABILITY AND FITNESS FOR A PARTICULAR PURPOSE ARE DISCLAIMED. IN NO EVENT SHALL THE OpenSSL PROJECT OR ITS CONTRIBUTORS BE LIABLE FOR ANY DIRECT, INDIRECT, INCIDENTAL, SPECIAL, EXEMPLARY, OR CONSEQUENTIAL DAMAGES (INCLUDING, BUT NOT LIMITED TO, PROCUREMENT OF SUBSTITUTE GOODS OR SERVICES; LOSS OF USE, DATA, OR PROFITS; OR BUSINESS INTERRUPTION) HOWEVER CAUSED AND ON ANY THEORY OF LIABILITY, WHETHER IN CONTRACT, STRICT LIABILITY, OR TORT (INCLUDING NEGLIGENCE OR OTHERWISE) ARISING IN ANY WAY OUT OF THE USE OF THIS SOFTWARE, EVEN IF ADVISED OF THE POSSIBILITY OF SUCH DAMAGE.

This product includes cryptographic software written by Eric Young(eay@cryptsoft.com). This product includes software written by Tim Hudson (tjh@cryptsoft.com).

Original SSLeay License

Copyright (C) 1995-1998 Eric Young (eay@cryptsoft.com) All rights reserved.

This package is an SSL implementation written by Eric Young (eay@cryptsoft.com).

The implementation was written so as to conform with Netscapes SSL.

This library is free for commercial and non-commercial use as long as the following conditions are aheared to. The following conditions apply to all code found in this distribution, be it the RC4, RSA, lhash, DES, etc., code; not just the SSL code. The SSL documentation included with this distribution is covered by the same copyright terms except that the holder is Tim Hudson (tjh@cryptsoft.com).

Copyright remains Eric Young's, and as such any Copyright notices in the code are not to be removed. If this package is used in a product, Eric Young should be given attribution as the author of the parts of the library used. This can be in the form of a textual message at program startup or in documentation (online or textual) provided with the package. Redistribution and use in source and binary forms, with or without modification, are permitted provided that the following conditions are met:

1. Redistributions of source code must retain the copyright notice, this list of conditions and the following disclaimer.

2. Redistributions in binary form must reproduce the above copyright notice, this list of conditions and the following disclaimer in the documentation and/or other materials provided with the distribution.

3. All advertising materials mentioning features or use of this software must display the following acknowledgement: "This product includes cryptographic software written by Eric Young (eay@cryptsoft.com)" The word 'cryptographic' can be left out if the routines from the library being used are not cryptographic related :-).

4. If you include any Windows specific code (or a derivative thereof) from the apps directory (application code) you must include an acknowledgement: "This product includes software written by Tim Hudson (tjh@cryptsoft. com)"

THIS SOFTWARE IS PROVIDED BY ERIC YOUNG "AS IS" AND ANY EXPRESS OR IMPLIED WARRANTIES, INCLUDING, BUT NOT LIMITED TO, THE IMPLIED WARRANTIES OF MERCHANTABILITY AND FITNESS FOR A PARTICULAR PURPOSE ARE DISCLAIMED. IN NO EVENT SHALL THE AUTHOR OR CONTRIBUTORS BE LIABLE FOR ANY DIRECT, INDIRECT, INCIDENTAL, SPECIAL, EXEMPLARY, OR CONSEQUENTIAL DAMAGES (INCLUDING, BUT NOT LIMITED TO, PROCUREMENT OF SUBSTITUTE GOODS OR SERVICES; LOSS OF USE, DATA, OR PROFITS; OR BUSINESS INTERRUPTION) HOWEVER CAUSED AND ON ANY THEORY OF LIABILITY, WHETHER IN CONTRACT, STRICT LIABILITY, OR TORT (INCLUDING NEGLIGENCE OR OTHERWISE) ARISING IN ANY WAY OUT OF THE USE OF THIS SOFTWARE, EVEN IF ADVISED OF THE POSSIBILITY OF SUCH DAMAGE.

The licence and distribution terms for any publically available version or derivative of this code cannot be changed. i.e. this code cannot simply be copied and put under another distribution licence [including the GNU Public Licence.]

BSD License

Some software components of this product incorporate source code covered under the BSD license as follows.

Component Name	License	URL
net-snmp-5.7.3	BSD	http://www.net-snmp.org/about/license.html
pcre-5.38	BSD	
libcap-1.7.4	BSD 2.0	http://www.kernel.org/pub/linux/libs/security/linux-privs/libcap2
lighttpd-1.4.35	BSD 2.0	http://www.opensource.org/licenses/bsd-license.html
MiniUPnP Project Client	BSD 2.0	
pppd-2.4.7	BSD 2.0	http://opensource.org/licenses/BSD-3-Clause

lighttpd is a secure, fast, compliant, and very flexible webserver that has been optimized for high-performance environments. It has a very low memory footprint compared to other webservers and takes care of cpuload. Its advanced feature-set (FastCGI, CGI, Auth, Output-Compression, URL-Rewriting and many more) make lighttpd the perfect webserver-software for every server that suffers load problems. Simple Network Management Protocol (SNMP) is an Internetstandard protocol for managing devices on IP networks. It is used mostly in network management systems to monitor the devices attached to the network for conditions that need administrative attention. Net-SNMP is a suite of applications used to implement SNMP v1, SNMP v2c and SNMP v3 using both IPv4 and IPv6. For more additional information, send email to help.cctv@hanwha.com.

Copyright (C) 2004. Kneschke, incremental

All rights reserved.

Redistribution and use in source and binary forms, with or without modification, are permitted provided that the following conditions are met :

- Redistributions of source code must retain the above copyright notice, this list of conditions and the following disclaimer.
- Redistributions in binary form must reproduce the above copyright notice, this list of conditions and the following disclaimer in the documentation and/or other materials provided with the distribution.
- Neither the name of the 'incremental' nor the names of its contributors may be used to endorse or promote products derived from this software without specific prior written permission.

THIS SOFTWARE IS PROVIDED BY THE COPYRIGHT HOLDERS AND CONTRIBUTORS "AS IS" AND ANY EXPRESS OR IMPLIED WARRANTIES, INCLUDING, BUT NOT LIMITED TO, THE IMPLIED WARRANTIES OF MERCHANTABILITY AND FITNESS FOR A PARTICULAR PURPOSE ARE DISCLAIMED. IN NO EVENT SHALL THE COPYRIGHT OWNER OR CONTRIBUTORS BE LIABLE FOR ANY DIRECT, INDIRECT, INCIDENTAL, SPECIAL, EXEMPLARY, OR CONSEQUENTIAL DAMAGES (INCLUDING, BUT NOT LIMITED TO, PROCUREMENT OF SUBSTITUTE GOODS OR SERVICES; LOSS OF USE, DATA, OR PROFITS; OR BUSINESS INTERRUPTION) HOWEVER CAUSED AND ON ANY THEORY OF LIABILITY, WHETHER IN CONTRACT, STRICT LIABILITY, OR TORT (INCLUDING NEGLIGENCE OR OTHERWISE) ARISING IN ANY WAY OUT OF THE USE OF THIS SOFTWARE, EVEN IF ADVISED OF THE POSSIBILITY OF SUCH DAMAGE.

Copyright (c) 1998-2001 University College London

All rights reserved.

Redistribution and use in source and binary forms, with or without modification, is permitted provided that the following conditions are met :

1. Redistributions of source code must retain the above copyright notice, this list of conditions and the following disclaimer.
2. Redistributions in binary form must reproduce the above copyright notice, this list of conditions and the following disclaimer in the documentation and/or other materials provided with the distribution.
3. All advertising materials mentioning features or use of this software must display the following acknowledgement: This product includes software developed by the Computer Science Department at University College London.
4. Neither the name of the University nor of the Department may be used to endorse or promote products derived from this software without specific prior written permission.

THIS SOFTWARE IS PROVIDED BY THE AUTHORS AND CONTRIBUTORS "AS IS" AND ANY EXPRESSED OR IMPLIED WARRANTIES, INCLUDING, BUT NOT LIMITED TO, THE IMPLIED WARRANTIES OF MERCHANTABILITY AND FITNESS FOR A PARTICULAR PURPOSEARE DISCLAIMED. IN NO EVENT SHALL THE AUTHORS OR CONTRIBUTORS BE LIABLE FOR ANY DIRECT, INDIRECT, INCIDENTAL, SPECIAL, EXEMPLARY, OR CONSEQUENTIAL DAMAGES (INCLUDING, BUT NOT LIMITED TO, PROCUREMENT OF SUBSTITUTE GOODS OR SERVICES; LOSS OF USE, DATA, OR PROFITS; OR BUSINESS INTERRUPTION) HOWEVER CAUSED AND ON ANY THEORY OF LIABILITY, WHETHER IN CONTRACT, STRICT LIABILITY, OR TORT (INCLUDING NEGLIGENCE OR OTHERWISE) ARISING IN ANY WAY OUT OF THE USE OF THIS SOFTWARE, EVEN IF ADVISED OF THE POSSIBILITY OF SUCH DAMAGE.

Copyright (c) 1988, 1989, 1990, 1991, 1993, 1994, 1995, 1996 The Regents of the University of California.

All rights reserved.

Redistribution and use in source and binary forms, with or without modification, are permitted provided that the following conditions are met:

1. Redistributions of source code must retain the above copyright notice, this list of conditions and the following disclaimer.
2. Redistributions in binary form must reproduce the above copyright notice, this list of conditions and the following disclaimer in the documentation and/or other materials provided with the distribution.
3. Neither the name of the Regents of the University of California nor the names of its contributors may be used to endorse or promote products derived from this software without specific prior written permission.

THIS SOFTWARE IS PROVIDED BY THE COPYRIGHT HOLDERS AND CONTRIBUTORS "AS IS" AND ANY EXPRESS OR IMPLIED WARRANTIES, INCLUDING, BUT NOT LIMITED TO, THE IMPLIED WARRANTIES OF MERCHANTABILITY AND FITNESS FOR A PARTICULAR PURPOSE ARE DISCLAIMED. IN NO EVENT SHALL THE COPYRIGHT OWNER OR CONTRIBUTORS BE LIABLE FOR ANY DIRECT, INDIRECT, INCIDENTAL, SPECIAL, EXEMPLARY, OR CONSEQUENTIAL DAMAGES (INCLUDING, BUT NOT LIMITED TO, PROCUREMENT OF SUBSTITUTE GOODS OR SERVICES; LOSS OF USE, DATA, OR PROFITS; OR BUSINESS INTERRUPTION) HOWEVER CAUSED AND ON ANY THEORY OF LIABILITY, WHETHER IN CONTRACT, STRICT LIABILITY, OR TORT (INCLUDING NEGLIGENCE OR OTHERWISE) ARISING IN ANY WAY OUT OF THE USE OF THIS SOFTWARE, EVEN IF ADVISED OF THE POSSIBILITY OF SUCH DAMAGE.

Copyright (c) 2006, Creative Labs Inc

All rights reserved.

Redistribution and use in source and binary forms, with or without modification, are permitted provided that the following conditions are met:

1. Redistributions of source code must retain the above copyright notice, this list of conditions and the following disclaimer.
2. Redistributions in binary form must reproduce the above copyright notice, this list of conditions and the following disclaimer in the documentation and/or other materials provided with the distribution.
3. Neither the name of the Creative Labs nor the names of its contributors may be used to endorse or promote products derived from this software without specific prior written permission.

THIS SOFTWARE IS PROVIDED BY THE COPYRIGHT HOLDERS AND CONTRIBUTORS "AS IS" AND ANY EXPRESS OR IMPLIED WARRANTIES, INCLUDING, BUT NOT LIMITED TO, THE IMPLIED WARRANTIES OF MERCHANTABILITY AND FITNESS FOR A PARTICULAR PURPOSE ARE DISCLAIMED. IN NO EVENT SHALL THE COPYRIGHT OWNER OR CONTRIBUTORS BE LIABLE FOR ANY DIRECT, INDIRECT, INCIDENTAL, SPECIAL, EXEMPLARY, OR CONSEQUENTIAL DAMAGES (INCLUDING, BUT NOT LIMITED TO, PROCUREMENT OF SUBSTITUTE GOODS OR SERVICES; LOSS OF USE, DATA, OR PROFITS; OR BUSINESS INTERRUPTION) HOWEVER CAUSED AND ON ANY THEORY OF LIABILITY, WHETHER IN CONTRACT, STRICT LIABILITY, OR TORT (INCLUDING NEGLIGENCE OR OTHERWISE) ARISING IN ANY WAY OUT OF THE USE OF THIS SOFTWARE, EVEN IF ADVISED OF THE POSSIBILITY OF SUCH DAMAGE.

Copyright (c) 2005-2012, Thomas BERNARD

All rights reserved.

Redistribution and use in source and binary forms, with or without modification, are permitted provided that the following conditions are met:

1. Redistributions of source code must retain the above copyright notice, this list of conditions and the following disclaimer.
2. Redistributions in binary form must reproduce the above copyright notice, this list of conditions and the following disclaimer in the documentation and/or other materials provided with the distribution.
3. Neither the name of Thomas BERNARD nor the names of its contributors may be used to endorse or promote products derived from this software without specific prior written permission.

THIS SOFTWARE IS PROVIDED BY THE COPYRIGHT HOLDERS AND CONTRIBUTORS "AS IS" AND ANY EXPRESS OR IMPLIED WARRANTIES, INCLUDING, BUT NOT LIMITED TO, THE IMPLIED WARRANTIES OF MERCHANTABILITY AND FITNESS FOR A PARTICULAR PURPOSE ARE DISCLAIMED. IN NO EVENT SHALL THE COPYRIGHT OWNER OR CONTRIBUTORS BE LIABLE FOR ANY DIRECT, INDIRECT, INCIDENTAL, SPECIAL, EXEMPLARY, OR CONSEQUENTIAL DAMAGES (INCLUDING, BUT NOT LIMITED TO, PROCUREMENT OF SUBSTITUTE GOODS OR SERVICES; LOSS OF USE, DATA, OR PROFITS; OR BUSINESS INTERRUPTION) HOWEVER CAUSED AND ON ANY THEORY OF LIABILITY, WHETHER IN CONTRACT, STRICT LIABILITY, OR TORT (INCLUDING NEGLIGENCE OR OTHERWISE) ARISING IN ANY WAY OUT OF THE USE OF THIS SOFTWARE, EVEN IF ADVISED OF THE POSSIBILITY OF SUCH DAMAGE.

Various copyrights apply to this package, listed in various separate parts below. Please make sure that you read all the parts.

Part 1: CMU/UCD copyright notice: (BSD like)

Copyright 1989, 1991, 1992 by Carnegie Mellon University Derivative Work - 1996, 1998-2000

Copyright 1996, 1998-2000 The Regents of the University of California

All Rights Reserved

Permission to use, copy, modify and distribute this software and its documentation for any purpose and without fee is hereby granted, provided that the above copyright notice appears in all copies and that both that copyright notice and this permission notice appear in supporting documentation, and that the name of CMU and The Regents of the University of California not be used in advertising or publicity pertaining to distribution of the software without specific written permission.

CMU AND THE REGENTS OF THE UNIVERSITY OF CALIFORNIA DISCLAIM ALL WARRANTIES WITH REGARD TO THIS SOFTWARE, INCLUDING ALL IMPLIED WARRANTIES OF MERCHANTABILITY AND FITNESS. IN NO EVENT SHALL CMU OR THE REGENTS OF THE UNIVERSITY OF CALIFORNIA BE LIABLE FOR ANY SPECIAL, INDIRECT OR CONSEQUENTIAL DAMAGES OR ANY DAMAGES WHATSOEVER RESULTING FROM THE LOSS OF USE, DATA OR PROFITS, WHETHER IN AN ACTION OF CONTRACT, NEGLIGENCE OR OTHER TORTIOUS ACTION, ARISING OUT OF OR IN CONNECTION WITH THE USE OR PERFORMANCE OF THIS SOFTWARE.

Part 2 : Networks Associates Technology, Inc copyright notice (BSD)

Copyright (c) 2001-2003, Networks Associates Technology, Inc

All rights reserved.

Redistribution and use in source and binary forms, with or without modification, are permitted provided that the following conditions are met: yy Redistributions of source code must retain the above copyright notice, this list of conditions and the following disclaimer. yy Redistributions in binary form must reproduce the above copyright notice, this list of conditions and the following disclaimer in the documentation and/or other materials provided with the distribution. yy Neither the name of the Networks Associates Technology, Inc nor the names of its contributors may be used to endorse or promote products derived from this software without specific prior written permission.

THIS SOFTWARE IS PROVIDED BY THE COPYRIGHT HOLDERS AND CONTRIBUTORS "AS IS" AND ANY EXPRESS OR IMPLIED WARRANTIES, INCLUDING, BUT NOT LIMITED TO, THE IMPLIED WARRANTIES OF MERCHANTABILITY AND FITNESS FOR A PARTICULAR PURPOSE ARE DISCLAIMED. IN NO EVENT SHALL THE COPYRIGHT HOLDERS OR CONTRIBUTORS BE LIABLE FOR ANY DIRECT, INDIRECT, INCIDENTAL, SPECIAL, EXEMPLARY, OR CONSEQUENTIAL DAMAGES (INCLUDING, BUT NOT LIMITED TO, PROCUREMENT OF SUBSTITUTE GOODS OR SERVICES; LOSS OF USE, DATA, OR PROFITS; OR BUSINESS INTERRUPTION) HOWEVER CAUSED AND ON ANY THEORY OF LIABILITY, WHETHER IN CONTRACT, STRICT LIABILITY, OR TORT (INCLUDING NEGLIGENCE OR OTHERWISE) ARISING IN ANY WAY OUT OF THE USE OF THIS SOFTWARE, EVEN IF ADVISED OF THE POSSIBILITY OF SUCH DAMAGE.

Part 3: Cambridge Broadband Ltd. copyrightnotice (BSD)

Portions of this code are copyright (c) 2001-2003, Cambridge Broadband Ltd.

All rights reserved.

Redistribution and use in source and binary forms, with or without modification, are permitted provided that the following conditions are met: yy Redistributions of source code must retain the above copyright notice, this list of conditions and the following disclaimer. yy Redistributions in binary form must reproduce the above copyright notice, this list of conditions and the following disclaimer in the documentation and/or other materials provided with the distribution. yy The name of Cambridge Broadband Ltd. may not be used to endorse or promote products derived from this software without specific prior written permission.

THIS SOFTWARE IS PROVIDED BY THE COPYRIGHT HOLDER "AS IS" AND ANY EXPRESS OR IMPLIED WARRANTIES, INCLUDING, BUT NOT LIMITED TO, THE IMPLIED WARRANTIES OF MERCHANTABILITY AND FITNESS FOR A PARTICULAR PURPOSE ARE DISCLAIMED. IN NO EVENT SHALL THE COPYRIGHT HOLDER BE LIABLE FOR ANY DIRECT, INDIRECT, INCIDENTAL, SPECIAL, EXEMPLARY, OR CONSEQUENTIAL DAMAGES (INCLUDING, BUT NOT LIMITED TO, PROCUREMENT OF SUBSTITUTE GOODS OR SERVICES; LOSS OF USE, DATA, OR PROFITS; OR BUSINESS INTERRUPTION) HOWEVER CAUSED AND ON ANY THEORY OF LIABILITY, WHETHER IN CONTRACT, STRICT LIABILITY, OR TORT (INCLUDING NEGLIGENCE OR OTHERWISE) ARISING IN ANY WAY OUT OF THE USE OF THIS SOFTWARE, EVEN IF ADVISED OF THE POSSIBILITY OF SUCH DAMAGE.

Part 4: Sun Microsystems, Inc. copyright notice

(BSD)

Copyright (c) 2003 Sun Microsystems, Inc., 4150 Network

Circle, Santa Clara, California 95054, U.S.A.

All rights reserved.

Use is subject to license terms below. This distribution may include materials developed by third parties. Sun, Sun Microsystems, the Sun logo and Solaris are trademarks or registered trademarks of Sun Microsystems, Inc. in the U.S. and other countries. Redistribution and use in source and binary forms, with or without modification, are permitted provided that the following conditions are met: yy Redistributions of source code must retain the above copyright notice, this list of conditions and the following disclaimer. yy Redistributions in binary form must reproduce the above copyright notice, this list of conditions and the following disclaimer in the documentation and/or other materials provided with the distribution. yy Neither the name of the Sun Microsystems, Inc. nor the names of its contributors may be used to endorse or promote products derived from this software without specific prior written permission.

THIS SOFTWARE IS PROVIDED BY THE COPYRIGHT HOLDERS AND CONTRIBUTORS "AS IS" AND ANY EXPRESS OR IMPLIED WARRANTIES, INCLUDING, BUT NOT LIMITED TO, THE IMPLIED WARRANTIES OF MERCHANTABILITY AND FITNESS FOR A PARTICULAR PURPOSE ARE DISCLAIMED. IN NO EVENT SHALL THE COPYRIGHT HOLDERS OR CONTRIBUTORS BE LIABLE FOR ANY DIRECT, INDIRECT, INCIDENTAL, SPECIAL, EXEMPLARY, OR CONSEQUENTIAL DAMAGES (INCLUDING, BUT NOT LIMITED TO, PROCUREMENT OF SUBSTITUTE GOODS OR SERVICES; LOSS OF USE, DATA, OR PROFITS; OR BUSINESS INTERRUPTION) HOWEVER CAUSED AND ON ANY THEORY OF LIABILITY, WHETHER IN CONTRACT, STRICT LIABILITY, OR TORT (INCLUDING NEGLIGENCE OR OTHERWISE) ARISING IN ANY WAY OUT OF THE USE OF THIS SOFTWARE, EVEN IF ADVISED OF THE POSSIBILITY OF SUCH DAMAGE.

Part 5: Sparta, Inc copyright notice (BSD)

Copyright (c) 2003-2009, Sparta, Inc

All rights reserved.

Redistribution and use in source and binary forms, with or without modification, are permitted provided that the following conditions are met: yy Redistributions of source code must retain the above copyright notice, this list of conditions and the following disclaimer. yy Redistributions in binary form must reproduce the

above copyright notice. this list of conditions and the following disclaimer in the documentation and/or other materials provided with the distribution. yy Neither the name of Sparta, Inc nor the names of its contributors may be used to endorse or promote products derived from this software without specific prior written permission.

THIS SOFTWARE IS PROVIDED BY THE COPYRIGHT HOLDERS AND CONTRIBUTORS "AS IS" AND ANY EXPRESS OR IMPLIED WARRANTIES. INCLUDING, BUT NOT LIMITED TO, THE IMPLIED WARRANTIES OF MERCHANTABILITY AND FITNESS FOR A PARTICULAR PURPOSE ARE DISCLAIMED. IN NO EVENT SHALL THE COPYRIGHT HOLDERS OR CONTRIBUTORS BE LIABLE FOR ANY DIRECT, INDIRECT, INCIDENTAL, SPECIAL, EXEMPLARY, OR CONSEQUENTIAL DAMAGES (INCLUDING, BUT NOT LIMITED TO, PROCUREMENT OF SUBSTITUTE GOODS OR SERVICES; LOSS OF USE, DATA, OR PROFITS; OR BUSINESS INTERRUPTION) HOWEVER CAUSED AND ON ANY THEORY OF LIABILITY, WHETHER IN CONTRACT, STRICT LIABILITY, OR TORT (INCLUDING NEGLIGENCE OR OTHERWISE) ARISING IN ANY WAY OUT OF THE USE OF THIS SOFTWARE, EVEN IF ADVISED OF THE POSSIBILITY OF SUCH DAMAGE.

Part 6: Cisco/BUPTNIC copyright notice (BSD)

Copyright (c) 2004, Cisco, Inc and Information Network

Center of Beijing University of Posts and Telecommunications.

All rights reserved.

Redistribution and use in source and binary forms, with or without modification, are permitted provided that the following conditions are met: yy Redistributions of source code must retain the above copyright notice, this list of conditions and the following disclaimer. yy Redistributions in binary form must reproduce the above copyright notice, this list of conditions and the following disclaimer in the documentation and/or other materials provided with the distribution. yy Neither the name of Cisco, Inc, Beijing University of Posts and Telecommunications, nor the names of their contributors may be used to endorse or promote products derived from this software without specific prior written permission.

THIS SOFTWARE IS PROVIDED BY THE COPYRIGHT HOLDERS AND CONTRIBUTORS "AS IS" AND ANY EXPRESS OR IMPLIED WARRANTIES. INCLUDING, BUT NOT LIMITED TO, THE IMPLIED WARRANTIES OF MERCHANTABILITY AND FITNESS FOR A PARTICULAR PURPOSE ARE DISCLAIMED. IN NO EVENT SHALL THE COPYRIGHT HOLDERS OR CONTRIBUTORS BE LIABLE FOR ANY DIRECT, INDIRECT, INCIDENTAL, SPECIAL, EXEMPLARY, OR CONSEQUENTIAL DAMAGES (INCLUDING, BUT NOT LIMITED TO, PROCUREMENT OF SUBSTITUTE GOODS OR SERVICES; LOSS OF USE, DATA, OR PROFITS; OR BUSINESS INTERRUPTION) HOWEVER CAUSED AND ON ANY THEORY OF LIABILITY, WHETHER IN CONTRACT, STRICT LIABILITY, OR TORT (INCLUDING NEGLIGENCE OR OTHERWISE) ARISING IN ANY WAY OUT OF THE USE OF THIS SOFTWARE, EVEN IF ADVISED OF THE POSSIBILITY OF SUCH DAMAGE.

Part 7: Fabasoft R&D Software Software GmbH & Co KG copyright Notice (BSD)

Copyright (c) Fabasoft R&D Software GmbH & Co KG, 2003oss@fabasoft.com

Author: Bernhard Penz

Redistribution and use in source and binary forms, with or without modification, are permitted provided that the following conditions are met: yy Redistributions of source code must retain the above copyright notice, this list of conditions and the following disclaimer. yy Redistributions in binary form must reproduce the above copyright notice, this list of conditions and the following disclaimer in the documentation and/or other materials provided with the distribution. yy The name of Fabasoft R&D Software GmbH & Co KG or any of its subsidiaries, brand or product names may not be used to endorse or promote products derived from this software without specific prior written permission.

THIS SOFTWARE IS PROVIDED BY THE COPYRIGHT HOLDER "AS IS" AND ANY EXPRESS OR IMPLIED WARRANTIES, INCLUDING, BUT NOT LIMITED TO, THE IMPLIED WARRANTIES OF MERCHANTABILITY AND FITNESS FOR A PARTICULAR PURPOSE ARE DISCLAIMED. IN NO EVENT SHALL THE COPYRIGHT HOLDER BE LIABLE FOR ANY DIRECT, INDIRECT, INCIDENTAL, SPECIAL, EXEMPLARY, OR CONSEQUENTIAL DAMAGES (INCLUDING, BUT NOT LIMITED TO, PROCUREMENT OF SUBSTITUTE GOODS OR SERVICES; LOSS OF USE, DATA, OR PROFITS; OR BUSINESS INTERRUPTION) HOWEVER CAUSED AND ON ANY THEORY OF LIABILITY, WHETHER IN CONTRACT, STRICT LIABILITY, OR TORT (INCLUDING NEGLIGENCE OR OTHERWISE) ARISING IN ANY WAY OUT OF THE USE OF THIS SOFTWARE, EVEN IF ADVISED OF THE POSSIBILITY OF SUCH DAMAGE.

Part 8: Apple Inc. copyright notice (BSD)

Copyright (c) 2007 Apple Inc.

All rights reserved.

Redistribution and use in source and binary forms, with or without modification, are permitted provided that the following conditions are met:

1. Redistributions of source code must retain the above copyright notice, this list of conditions and the following disclaimer.
2. Redistributions in binary form must reproduce the above copyright notice, this list of conditions and the following disclaimer in the documentation and/or other materials provided with the distribution. 3. Neither the name of Apple Inc. ("Apple") nor the names of its contributors may be used to endorse or promote products derived from this software without specific prior written permission.

THIS SOFTWARE IS PROVIDED BY APPLE AND ITS CONTRIBUTORS "AS IS" AND ANY EXPRESS OR IMPLIED WARRANTIES, INCLUDING, BUT NOT LIMITED TO, THE IMPLIED WARRANTIES OF MERCHANTABILITY AND FITNESS FOR A PARTICULAR PURPOSE ARE DISCLAIMED. IN NO EVENT SHALL APPLE OR ITSCONTRIBUTORS BE LIABLE FOR ANY DIRECT, INDIRECT, INCIDENTAL, SPECIAL, EXEMPLARY, OR CONSEQUENTIAL DAMAGES (INCLUDING, BUT NOT LIMITED TO, PROCUREMENT OF SUBSTITUTE GOODS OR SERVICES; LOSS OF USE, DATA, OR PROFITS; OR BUSINESS INTERRUPTION) HOWEVER CAUSED AND ON ANY THEORY OF LIABILITY, WHETHER IN CONTRACT, STRICT LIABILITY, OR TORT (INCLUDING NEGLIGENCE OR OTHERWISE) ARISING IN ANY WAY OUT OF THE USE OF THIS SOFTWARE, EVEN IF ADVISED OF THE POSSIBILITY OF SUCH DAMAGE.

Part 9: ScienceLogic, LLC copyright notice(BSD)

Copyright (c) 2009, ScienceLogic, LLC

All rights reserved.

Redistribution and use in source and binary forms, with or without modification, are permitted provided that the following conditions aremet: yy Redistributions of source code must retain the above copyright notice, this list of conditions and the following disclaimer. yy Redistributions in binary form must reproduce the above copyright notice, this list of conditions and the following disclaimer in the documentation and/or other materials provided with the distribution. yy Neither the name of ScienceLogic, LLC nor the names of its contributors may be used to endorse or promote products derived from this software without specific prior written permission.

THIS SOFTWARE IS PROVIDED BY THE COPYRIGHT HOLDERS AND CONTRIBUTORS "AS IS" AND ANY EXPRESS OR IMPLIED WARRANTIES. INCLUDING, BUT NOT LIMITED TO, THE IMPLIED WARRANTIES OF MERCHANTABILITY AND FITNESS FOR A PARTICULAR PURPOSE ARE DISCLAIMED. IN NO EVENT SHALL THE COPYRIGHT HOLDERS OR CONTRIBUTORS BE LIABLE FOR ANY DIRECT, INDIRECT, INCIDENTAL, SPECIAL, EXEMPLARY, OR CONSEQUENTIAL DAMAGES (INCLUDING, BUT NOT LIMITED TO, PROCUREMENT OF SUBSTITUTE GOODS OR SERVICES; LOSS OF USE, DATA, OR PROFITS; OR BUSINESS INTERRUPTION) HOWEVER CAUSED AND ON ANY THEORY OF LIABILITY, WHETHER IN CONTRACT, STRICT LIABILITY, OR TORT (INCLUDING NEGLIGENCE OR OTHERWISE) ARISING IN ANY WAY OUT OF THE USE OF THIS SOFTWARE, EVEN IF ADVISED OF THE POSSIBILITY OF SUCH DAMAGE

The MIT License

Some software components of this product incorporate source code covered under the MIT license as follows

MIT License 2.0

- Acewidget, bettermeans, jquery-ui, libxml, libxml2, Mesa3D-MesaLib,mwEmbed,OpenGL Samples Pack, Wide Studio, xorg-server, dropbear-2012.55, ncurses-5.7

Copyright (c) 2011, The Dojo Foundation

Copyright 2010, AUTHORS.txt (http://jqueryui.com/about)

Dual licensed under the MIT or GPL Version 2 licenses.

- http://jquery.org/license

- http://docs.jquery.com/UI/Widget

Copyright Daniel Veillard

Copyright Igor Zlatovic <igor@zlatkovic.com>

Copyright Aleksey Sanin

Copyright Gary Pennington <Gary.Pennington@uk.sun.com>

Copyright Alfred Mickautsch <alfred@mickautsch.de>

Copyright Bjorn Reese <bjorn.reese@systematic.dk>

Copyright Joel W. Reed

Copyright William Brack <wbrack@mmm.com.hk>

Copyright (c) 2007-2010 The Khronos Group Inc.

Copyright Atish Kumar Patra

Copyright (c) 2006 Free Software Foundation, Inc.

Permission is hereby granted, free of charge, to any person obtaining a copy of this software and associated documentation files (the "Software"), to deal in the Software without restriction, including without limitation the rights to use, copy, modify, merge, publish, distribute, sublicense, and/or sell copies of the Software, and to permit persons to whom the Software is furnished to do so, subject to the following conditions:

The above copyright notice and this permission notice shall be included in all copies or substantial portions of the Software.

THE SOFTWARE IS PROVIDED "AS IS", WITHOUT WARRANTY OF ANY KIND, EXPRESS OR IMPLIED, INCLUDING BUT NOT LIMITED TO THE WARRANTIES OF MERCHANTABILITY, FITNESS FOR A PARTICULAR PURPOSE AND NONINFRINGEMENT. IN NO EVENT SHALL THE AUTHORS OR COPYRIGHT HOLDERS BE LIABLE FOR ANY CLAIM, DAMAGES OR OTHER LIABILITY, WHETHER IN AN ACTION OF CONTRACT, TORT OR OTHERWISE, ARISING FROM, OUT OF OR IN CONNECTION WITH THE SOFTWARE OR THE USE OR OTHER DEALINGS IN THE SOFTWARE.

Mozilla Public License

Since we, at Hanwha Techwin, used the Mozilla Firefox component without modifying the source code according to the MOZILLA Public license 1.1, we are not obliged to provide the source code of the corresponding component.

- Version 1.1

1. Definitions.

1.0.1. "Commercial Use" means distribution or otherwise making the Covered Code available to a third party.

1.1. "Contributor" means each entity that creates or contributes to the creation of Modifications.

1.2. "Contributor Version" means the combination of the Original Code, prior Modifications used by a Contributor, and the Modifications made by that particular Contributor.

1.3. "Covered Code" means the Original Code or Modifications or the combination of the Original Code and Modifications, in each case including portions thereof.

1.4. "Electronic Distribution Mechanism" means a mechanism generally accepted in the software development community for the electronic transfer of data.

1.5. "Executable" means Covered Code in any form other than Source Code.

1.6. "Initial Developer" means the individual or entity identified as the Initial Developer in the Source Code notice required by Exhibit A.

1.7. "Larger Work" means a work which combines Covered Code or portions thereof with code not governed by the terms of this License.

1.8. "License" means this document.

1.8.1. "Licensable" means having the right to grant, to the maximum extent possible, whether at the time of the initial grant or subsequently acquired, any and all of the rights conveyed herein.

1.9. "Modifications" means any addition to or deletion from the substance or structure of either the Original Code or any previous Modifications. When Covered Code is released as a series of files, a Modification is:

A. Any addition to or deletion from the contents of a file containing Original Code or previous Modifications.

B. Any new file that contains any part of the Original Code or previous Modifications.

1.10. "Original Code" means Source Code of computer software code which is described in the Source Code notice required by Exhibit A as Original Code, and which, at the time of its release under this License is not already Covered Code governed by this License.

1.10.1. "Patent Claims" means any patent claim(s), now owned or hereafter acquired, including without limitation, method, process, and apparatus claims, in any patent Licensable by grantor.

1.11. "Source Code" means the preferred form of the Covered Code for making modifications to it, including all modules it contains, plus any associated interface definition files, scripts used to control compilation and installation of an Executable, or source code differential comparisons against either the Original Code or another well known, available Covered Code of the Contributor's choice. The Source Code can be in a compressed or archival form, provided the appropriate decompression or de-archiving software is widely available for no charge.

1.12. "You" (or "Your") means an individual or a legal entity exercising rights under, and complying with all of the terms of, this License or a future version of this License issued under Section 6.1. For legal entities, "You" includes any entity which controls, is controlled by, or is under common control with You. For purposes of this definition, "control" means (a) the power, direct or indirect, to cause the direction or management of such entity, whether by contract or otherwise, or (b) ownership of more than fifty percent (50%) of the outstanding shares or beneficial ownership of such entity.

2. Source Code License.

2.1. The Initial Developer Grant. The Initial Developer hereby grants You a world-wide, royalty-free, non-exclusive license, subject to third party intellectual property claims:

(a) under intellectual property rights (other than patent or trademark) Licensable by Initial Developer to use, reproduce, modify, display, perform, sublicense and distribute the Original Code (or portions thereof) with or without Modifications, and/or as part of a Larger Work; and

(b) under Patents Claims infringed by the making, using or selling of Original Code, to make, have made, use, practice, sell, and offer for sale, and/or otherwise dispose of the Original Code (or portions thereof).

(c) the licenses granted in this Section 2.1(a) and (b) are effective on the date Initial Developer first distributes Original Code under the terms of this License.

(d) Notwithstanding Section 2.1(b) above, no patent license is granted: 1) for code that You delete from the Original Code; 2) separate from the Original Code; or 3) for infringements caused by: i) the modification of the Original Code or ii) the combination of the Original Code with other software or devices.

2.2. Contributor Grant. Subject to third party intellectual property claims, each Contributor hereby grants You a world-wide, royalty-free, non-exclusive license

(a) under intellectual property rights (other than patent or trademark) Licensable by Contributor, to use, reproduce, modify, display, perform, sublicense and distribute the Modifications created by such Contributor (or portions thereof) either on an unmodified basis, with other Modifications, as Covered Code and/or as part of a Larger Work; and

(b) under Patent Claims infringed by the making, using, or selling of Modifications made by that Contributor either alone and/or in combination with its Contributor Version (or portions of such combination), to make, use, sell, offer for sale, have made, and/or otherwise dispose of: 1) Modifications made by that Contributor (or portions thereof); and 2) the combination of Modifications made by that Contributor with its Contributor Version (or portions of such combination).

(c) the licenses granted in Sections 2.2(a) and 2.2(b) are effective on the date Contributor first makes Commercial Use of the Covered Code.

(d) Notwithstanding Section 2.2(b) above, no patent license is granted: 1) for any code that Contributor has deleted from the Contributor Version; 2) separate from the Contributor Version; 3) for infringements caused by: i) third party modifications of Contributor Version or ii) the combination of Modifications made by that Contributor with other software (except as part of the Contributor Version) or other devices; or 4) under Patent Claims infringed by Covered Code in the absence of Modifications made by that Contributor.

3. Distribution Obligations.

3.1. Application of License. The Modifications which You create or to which You contribute are governed by the terms of this License, including without limitation Section 2.2. The Source Code version of Covered Code may be distributed only under the terms of this License or a future version of this License released under Section 6.1, and You must include a copy of this License with every copy of the Source Code You distribute. You may not offer or impose any terms on any Source Code version that alters or restricts the applicable version of this License or the recipients' rights hereunder. However, You may include an additional document offering the additional rights described in Section 3.5.

3.2. Availability of Source Code. Any Modification which You create or to which You contribute must be made available in Source Code form under the terms of this License either on the same media as an Executable version or via an accepted Electronic Distribution Mechanism to anyone to whom you made an Executable version available; and if made available via Electronic Distribution Mechanism, must remain available for at least twelve (12) months after the date it initially became available, or at least six (6) months after a subsequent version of that particular Modification has been made available to such recipients. You are responsible for ensuring that the Source Code version remains available even if the Electronic Distribution Mechanism is maintained by a third party.

3.3. Description of Modifications. You must cause all Covered Code to which You contribute to contain a file documenting the changes You made to create that Covered Code and the date of any change. You must include a prominent statement that the Modification is derived, directly or indirectly, from Original Code provided by the Initial Developer and including the name of the Initial Developer in (a) the Source Code, and (b) in any notice in an Executable version or related documentation in which You describe the origin or ownership of the Covered Code.

3.4. Intellectual Property Matters

(a) Third Party Claims. If Contributor has knowledge that a license under a third party's intellectual property rights is required to exercise the rights granted by such Contributor under Sections 2.1 or 2.2, Contributor must include a text file with the Source Code distribution titled "LEGAL" which describes the claim and the party making the claim in sufficient detail that a recipient will know whom to contact. If Contributor obtains such knowledge after the Modification is made available as described in Section 3.2, Contributor shall promptly modify the LEGAL file in all copies Contributor makes available thereafter and shall take other steps (such as notifying appropriate mailing lists or newsgroups) reasonably calculated to inform those who received the Covered Code that new knowledge has been obtained.

(b) Contributor APIs. If Contributor's Modifications include an application programming interface and Contributor has knowledge of patent licenses which are reasonably necessary to implement that API, Contributor must also include this information in the LEGAL file.

(c) Representations.

Contributor represents that, except as disclosed pursuant to Section 3.4(a) above, Contributor believes that Contributor's Modifications are Contributor's original creation(s) and/or Contributor has sufficient rights to grant the rights conveyed by this License.

3.5. Required Notices. You must duplicate the notice in Exhibit A in each file of the Source Code. If it is not possible to put such notice in a particular Source Code file due to its structure, then You must include such notice in a location (such as a relevant directory) where a user would be likely to look for such a notice. If You created one or more Modification(s) You may add your name as a Contributor to the notice described in Exhibit A. You must also duplicate this License in any documentation for the Source Code where You describe recipients' rights or ownership rights relating to Covered Code. You may choose to offer, and to charge a fee for, warranty, support, indemnity or liability obligations to one or more recipients of Covered Code. However, You may do so only on Your own behalf, and not on behalf of the Initial Developer or any Contributor. You must make it absolutely clear than any such warranty, support, indemnity or liability obligation is offered by You alone, and You hereby agree to indemnify the Initial Developer and every Contributor for any liability incurred by the Initial Developer or such Contributor as a result of warranty, support, indemnity or liability terms You offer.

3.6. Distribution of Executable Versions. You may distribute Covered Code in Executable form only if the requirements of Section 3.1-3.5 have been met for that Covered Code, and if You include a notice stating that the Source Code version of the Covered Code is available under the terms of this License, including a description of how and where You have fulfilled the obligations of Section 3.2. The notice must be conspicuously included in any notice in an Executable version, related documentation or collateral in which You describe recipients' rights relating to the Covered Code. You may distribute the Executable version of Covered Code or ownership rights under a license of Your choice, which may contain terms different from this License, provided that You are in compliance with the terms of this License and that the license for the Executable version does not attempt to limit or alter the recipient's rights in the Source Code version from the rights set forth in this License. If You distribute the Executable version under a different license You must make it absolutely clear that any terms which differ from this License are offered by You alone, not by the Initial Developer or any Contributor. You hereby agree to indemnify the Initial Developer and every Contributor for any liability incurred by the Initial Developer or such Contributor as a result of any such terms You offer.

3.7. Larger Works. You may create a Larger Work by combining Covered Code with other code not governed by the terms of this License and distribute the Larger Work as a single product. In such a case, You must make sure the requirements of this License are fulfilled for the Covered Code.

4. Inability to Comply Due to Statute or Regulation.

If it is impossible for You to comply with any of the terms of this License with respect to some or all of the Covered Code due to statute, judicial order, or regulation then You must: (a) comply with the terms of this License to the maximum extent possible; and (b) describe the limitations and the code they affect. Such description must be included in the LEGAL file described in Section 3.4 and must be included with all distributions of the Source Code. Except to the extent prohibited by statute or regulation, such description must be sufficiently detailed for a recipient of ordinary skill to be able to understand it.

5. Application of this License.

This License applies to code to which the Initial Developer has attached the notice in Exhibit A and to related Covered Code.

6. Versions of the License.

6.1. New Versions. Netscape Communications Corporation ("Netscape") may publish revised and/or new versions of the License from time to time. Each version will be given a distinguishing version number.

6.2. Effect of New Versions. Once Covered Code has been published under a particular version of the License, You may always continue to use it under the terms of that version. You may also choose to use such Covered Code under the terms of any subsequent version of the License published by Netscape. No one other than Netscape has the right to modify the terms applicable to Covered Code created under this License.

6.3. Derivative Works. If You create or use a modified version of this License (which you may only do in order to apply it to code which is not already Covered Code governed by this License), You must (a) rename Your license so that the phrases "Mozilla", "MOZILLAPL", "MOZPL", "Netscape", "MPL", "NPL" or any confusingly similar phrase do not appear in your license (except to note that your license differs from this License) and (b) otherwise make it clear that Your version of the license contains terms which differ from the Mozilla Public License and Netscape Public License. (Filling in the name of the Initial Developer, Original Code or Contributor in the notice described in Exhibit A shall not of themselves be deemed to be modifications of this License.)

7. DISCLAIMER OF WARRANTY.

COVERED CODE IS PROVIDED UNDER THIS LICENSE ON AN "AS IS" BASIS, WITHOUT WARRANTY OF ANY KIND, EITHER EXPRESSED OR IMPLIED, INCLUDING, WITHOUT LIMITATION, WARRANTIES THAT THE COVERED CODE IS FREE OF DEFECTS, MERCHANTABLE, FIT FOR A PARTICULAR PURPOSE OR NON-INFRINGING. THE ENTIRE RISK AS TO THE QUALITY AND PERFORMANCE OF THE COVERED CODE IS WITH YOU. SHOULD ANY COVERED CODE PROVE DEFECTIVE IN ANY RESPECT, YOU (NOT THE INITIAL DEVELOPER OR ANY OTHER CONTRIBUTOR) ASSUME THE COST OF ANY NECESSARY SERVICING, REPAIR OR CORRECTION. THIS DISCLAIMER OF WARRANTY CONSTITUTES AN ESSENTIAL PART OF THIS LICENSE. NO USE OF ANY COVERED CODE IS AUTHORIZED HEREUNDER EXCEPT UNDER THIS DISCLAIMER.

8. TERMINATION.

8.1. This License and the rights granted hereunder will terminate automatically if You fail to comply with terms herein and fail to cure such breach within 30 days of becoming aware of the breach. All sublicenses to the Covered Code which are properly granted shall survive any termination of this License. Provisions which, by their nature, must remain in effect beyond the termination of this License shall survive.

8.2. If You initiate litigation by asserting a patent infringement claim (excluding declatory judgment actions) against Initial Developer or a Contributor (the Initial Developer or Contributor against whom You file such action is referred to as "Participant") alleging that:

(a) such Participant's Contributor Version directly or indirectly infringes any patent, then any and all rights granted by such Participant to You under Sections 2.1 and/or 2.2 of this License shall, upon 60 days notice from Participant terminate prospectively, unless if within 60 days after receipt of notice You either: (i) agree in writing to pay Participant a mutually agreeable reasonable royalty for Your past and future use of Modifications made by such Participant, or (ii) withdraw Your litigation claim with respect to the Contributor Version against such Participant. If within 60 days of notice, a reasonable royalty and payment arrangement are not mutually agreed upon in writing by the parties or the litigation claim is not withdrawn, the rights granted by Participant to You under Sections 2.1 and/or 2.2 automatically terminate at the expiration of the 60 day notice period specified above.

(b) any software, hardware, or device, other than such Participant's Contributor Version, directly or indirectly infringes any patent, then any rights granted to You by such Participant under Sections 2.1(b) and 2.2(b) are revoked effective as of the date You first made, used, sold, distributed, or had made, Modifications made by that Participant.

8.3. If You assert a patent infringement claim against Participant alleging that such Participant's Contributor Version directly or indirectly infringes any patent where such claim is resolved (such as by license or settlement) prior to the initiation of patent infringement litigation, then the reasonable value of the licenses granted by such Participant under Sections 2.1 or 2.2 shall be taken into account in determining the amount or value of any payment or license.

8.4. In the event of termination under Sections 8.1 or 8.2 above, all end user license agreements (excluding distributors and resellers) which have been validly granted by You or any distributor hereunder prior to termination shall survive termination.

9. LIMITATION OF LIABILITY.

UNDER NO CIRCUMSTANCES AND UNDER NO LEGAL THEORY, WHETHER TORT (INCLUDING NEGLIGENCE), CONTRACT, OR OTHERWISE, SHALL YOU, THE INITIAL DEVELOPER, ANY OTHER CONTRIBUTOR, OR ANY DISTRIBUTOR OF COVERED CODE, OR ANY SUPPLIER OF ANY OF SUCH PARTIES, BE LIABLE TO ANY PERSON FOR ANY INDIRECT, SPECIAL, INCIDENTAL, OR CONSEQUENTIAL DAMAGES OF ANY CHARACTER INCLUDING, WITHOUT LIMITATION, DAMAGES FOR LOSS OF GOODWILL, WORK STOPPAGE, COMPUTER FAILURE OR MALFUNCTION, OR ANY AND ALL OTHER COMMERCIAL DAMAGES OR LOSSES. EVEN IF SUCH PARTY SHALL HAVE BEEN INFORMED OF THE POSSIBILITY OF SUCH DAMAGES. THIS LIMITATION OF LIABILITY SHALL NOT APPLY TO LIABILITY FOR DEATH OR PERSONAL INJURY RESULTING FROM SUCH PARTY'S NEGLIGENCE TO THE EXTENT APPLICABLE LAW PROHIBITS SUCH LIMITATION. SOME JURISDICTIONS DO NOT ALLOW THE EXCLUSION OR LIMITATION OF INCIDENTAL OR CONSEQUENTIAL DAMAGES, SO THIS EXCLUSION AND LIMITATION MAY NOT APPLY TO YOU. 10. U.S. GOVERNMENT END USERS.

The Covered Code is a "commercial item," as that term is defined in 48 C.F.R. 2.101 (Oct. 1995), consisting of "commercial computer software" and "commercial computer software documentation," as such terms are used in 48 C.F.R. 12.212 (Sept. 1995). Consistent with 48 C.F.R. 12.212 and 48 C.F.R. 227.7202-1 through 227.7202-4 (June 1995), all U.S. Government End Users acquire Covered Code with only those rights set forth herein.

11. MISCELLANEOUS.

This License represents the complete agreement concerning subject matter hereof. If any provision of this License is held to be unenforceable, such provision shall be reformed only to the extent necessary to make it enforceable. This License shall be governed by California law provisions (except to the extent applicable law, if any, provides otherwise), excluding its conflict-of-law provisions. With respect to disputes in which at least one party is a citizen of, or an entity chartered or registered to do business in the United States of America, any litigation relating to this License shall be subject to the jurisdiction of the Federal Courts of the Northern District of California, with venue lying in Santa Clara County, California, with the losing party responsible for costs, including without limitation, court costs and reasonable attorneys' fees and expenses. The application of the United Nations Convention on Contracts for the International Sale of Goods is expressly excluded. Any law or regulation which

provides that the language of a contract shall be construed against the drafter shall not apply to this License.

12. RESPONSIBILITY FOR CLAIMS.

As between Initial Developer and the Contributors, each party is responsible for claims and damages arising, directly or indirectly, out of its utilization of rights under this License and You agree to work with Initial Developer and Contributors to distribute such responsibility on an equitable basis. Nothing herein is intended or shall be deemed to constitute any admission of liability.

13. MULTIPLE-LICENSED CODE.

Initial Developer may designate portions of the Covered Code as Multiple-Licensed. Multiple-Licensedmeans that the Initial Developer permits you to utilize portions of the Covered Code under Your choice of the MPL or the alternative licenses, if any, specified by the Initial Developer in the file described in Exhibit A.

EXHIBIT A -Mozilla Public License.

The contents of this file are subject to the Mozilla Public License Version 1.1 (the "License"); you may not use this file except in compliance with the License. You may obtain a copy of the License at http://www.mozilla.org/MPL/Software distributed under the License is distributed on an "AS IS" basis, WITHOUT WARRANTY OF ANY KIND, either express or implied. See the License for the specific language governing rights and limitations under the License.

The Original Code is _____.

The Initial Developer of the Original Code is _____. Portions created by _____ are Copyright (C) _____ _____. All Rights Reserved.

Contributor(s): _____.

Alternatively, the contents of this file may be used under the terms of the ____ license (the [___] License), in which case the provisions of [_____] License are applicable instead of those above. If you wish to allow use of your version of this file only under the terms of the [___] License and not to allow others to use your version of this file under the MPL, indicate your decision by deleting the provisions above and replace them with the notice and other provisions required by the [___] License. If you do not delete the provisions above, a recipient may use your version of this file under either the MPL or the [___] License."

[NOTE: The text of this Exhibit A may differ slightly from the text of the notices in the Source Code files of the Original Code. You should use the text of this Exhibit A rather than the text found in the Original Code Source Code for Your Modifications

The Independent JPEG Group's JPEG Software

The software included in this product contains copyrighted software that is licensed under the JPEG license.

- JPEG license
  - Code project . Generating Outline OpenGL. Libjpeg

This distribution contains the sixth public release of the Independent JPEG Group's free JPEG software. You are welcome to redistribute this software and to use it for any purpose, subject to the conditions under LEGAL ISSUES, below.

Serious users of this software (particularly those incorporating it into larger programs) should contact IJG at jpeg-info@uunet.uu.net to be added to our electronic mailing list. Mailing list members are notified of updates and have a chance to participate in technical discussions, etc.

This software is the work of Tom Lane, Philip Gladstone, Jim Boucher, Lee Crocker, Julian Minguillon, Luis Ortiz, George Phillips, Davide Rossi, Guido Vollbeding, Ge' Weijers, and other members of the Independent JPEG Group.

IJG is not affiliated with the official ISO JPEG standards committee.

LEGAL ISSUES

==========

In plain English:

1. We don't promise that this software works. (But if you find any bugs, please let us know!)

2. You can use this software for whatever you want. You don't have to pay us.

3. You may not pretend that you wrote this software. If you use it in a program, you must acknowledge somewhere in your documentation that you've used the IJG code.

In legalese:

The authors make NO WARRANTY or representation, either express or implied, with respect to this software, its quality, accuracy, merchantability, or fitness for a particular purpose. This software is provided "AS IS", and you, its user, assume the entire risk as to its quality and accuracy.

This software is copyright (C) 1991-1996, Thomas G. Lane. All Rights Reserved except as specified below.

Permission is hereby granted to use, copy, modify, and distribute this software (or portions thereof) for any purpose, without fee, subject to these conditions:

(1) If any part of the source code for this software is distributed, then this README file must be included, with this copyright and no-warranty notice unaltered; and any additions, deletions, or changes to the original files must be clearly indicated in accompanying documentation.

(2) If only executable code is distributed, then the accompanying documentation must state that "this software is based in part on the work of the Independent JPEG Group".

(3) Permission for use of this software is granted only if the user accepts full responsibility for any undesirable consequences; the authors accept NO LIABILITY for damages of any kind.

These conditions apply to any software derived from or based on the IJG code, not just to the unmodified library. If you use our work, you ought to acknowledge us.

Permission is NOT granted for the use of any IJG author's name or company name in advertising or publicity relating to this software or products derived from it. This software may be referred to only as "the Independent JPEG Group's software".

We specifically permit and encourage the use of this software as the basis of commercial products, provided that all warranty or liability claims are assumed by the product vendor.

ansi2knr.c is included in this distribution by permission of L. Peter Deutsch, sole proprietor of its copyright holder, Aladdin Enterprises of Menlo Park, CA.

ansi2knr.c is NOT covered by the above copyright and conditions, but instead by the usual distribution terms of the Free Software Foundation; principally, that you must include source code if you redistribute it. (See the file ansi2knr.c for full details.) However, since ansi2knr. c is not needed as part of any program generated from the IJG code, this does not limit you more than the foregoing paragraphs do.

The Unix configuration script "configure" was produced with GNU Autoconf. It is copyright by the Free Software Foundation but is freely distributable. The same holds for its supporting scripts (config.guess, config.sub, ltconfig, ltmain. sh). Another support script, install-sh, is copyright by M.I.T. but is also freely distributable.

It appears that the arithmetic coding option of the JPEG spec is covered by patents owned by IBM, AT&T, and Mitsubishi. Hence arithmetic coding cannot legally be used without obtaining one or more licenses. For this reason, support for arithmetic coding has been removed from the free JPEG software. (Since arithmetic coding provides only a marginal gain over the unpatented Huffman mode, it is unlikely that very many implementations will support it.) So far as we are aware, there are no patent restrictions on the remaining code.

The IJG distribution formerly included code to read and write GIF files. To avoid entanglement with the Unisys LZW patent, GIF reading support has been removed altogether, and the GIF writer has been simplified to produce "uncompressed GIFs". This technique does not use the LZW algorithm; the resulting GIF files are larger than usual, but are readable by all standard GIF decoders.

We are required to state that

"The Graphics Interchange Format(c) is the Copyright property of CompuServe Incorporated. GIF(sm) is a Service Mark property of CompuServe Incorporated."

T-Kernel License

- This Product uses the Source Code of T-Kernel under T-License granted by the T-Engine Forum(www.t-engine.org)

T-License [License Agreement for Source Code of T-Kernel]

established by T-Engine Forum
on January 23, 2004
revised on June 17, 2004
revised on December 21, 2006
revised on March 24, 2009

Article 1. Scope of License Agreement

1. This License Agreement sets forth copyrights and the terms and conditions of use applicable to the source code of T-Kernel distributed by T-Engine Forum and any derivative work created therefrom.

Article 2. Definition

1. "T-Kernel" means a real-time operating system controlled and distributed by T-Engine Forum on behalf of the copyright holder thereof.

2. "Source Code" means a source program, including related comments and documentations, for the T-Kernel and the Ported Source Code defined in Article 2.8 which is registered with T-Engine Forum.

3. "Hardware-dependent Part" means the part of the Source Code which depends on hardware and needs to be changed when the Source Code is ported and operated on the target hardware, and is designated and separated as such part.

4. "Compiler-dependent Part" means the part of the Source Code which depends on compiler and needs to be changed when the Source Code is ported and operated on the target hardware, and is designated and separated as such part.

5. "Header File" means the part of the Source Code which contains definitions necessary to develop application programs.

6. "T-Engine Hardware" means the hardware which is manufactured in accordance with the T-Engine Hardware specifications or the µT-Engine Hardware specifications issued by T-Engine Forum, and registered with T-Engine Forum.

7. "Similar Hardware to T-Engine Hardware" means any hardware (including software which emulates hardware) other than that defined in Article 2.6 above, on which the T-Kernel can be operated.

8. "Ported Source Code" means a source program produced from the Source Code by modifying only its Hardwaredependent Part and/or Compiler-dependent Part to enable it to be operated on the T-Engine Hardware or the Similar Hardware to T-Engine Hardware. The Ported Source Code which is registered with T-Engine Forum shall be included in the Source Code.

9. "Modified Source Code" means a source program modified from the Source Code for the purpose of improving its performance, increasing or decreasing its function, and the like. The Ported Source Code shall not be included in the Modified Source Code.

10. "Binary Code" means an executable code form which is created by compiling programs, which include all or part of the Source Code or the Modified Source Code.

11. "Derivative Work" means the Modified Source Code or the Binary Code.

12. "Embedded Product" means any product which operates with executable code form of the Source Code, the Modified Source Code or the Binary Code loaded on its hardware.

13. "End User" means a consumer who uses the Embedded Product.

14. "System Developer" means any person who develops the Embedded Product by itself or has a third party develop the same, and provides, whether with or without payment, the End User with the Embedded Product.

15. "Distributor of Modification" means any person who produces the Modified Source Code and, whether with or without payment, distributes the same to any third party.

16. "Patch for Modification" means a difference, program, system, or the like in order to create the Modified Source Code from the Source Code or the Binary Code thereof.

17. "Vicarious Execution of Patch Processing" means vicarious execution service to create the Modified Source Code applying the Patch for Modification to the Source Code or the Binary Code thereof.

18. "Source Code User" means a person who uses the Source Code.

19. "Distribution" means any of the following acts:

1. to transmit a work to a large number of specific persons through the Internet communication, broadcasting, and the like;

2. to transmit a work to the general public through the Internet communication, broadcasting. and the like automatically in response to a request from the public: and

3. to distribute a copy of a work to the general public or a large number of specific persons.

Article 3. Copyright

1. The copyrights of the Source Code shall be owned by Ken Sakamura.

Article 4. License of Source Code

1. As provided for in this Article. T-Engine Forum shall provide. and grant a license to use, the Source Code free of charge to any person who has taken the necessary procedure for registration as prescribed by T-Engine Forum and agreed to the T-License.

2. The Source Code shall be distributed exclusively by T-Engine Forum. Any person who obtains the Source Code under Article 4.1 above shall not make any re-Distribution of the Source Code.

3. In accordance with the license granted under Article 4.1 above, the Source Code User may perform the following acts:

1. to copy and/or modify the Source Code provided by T-Engine Forum hereunder for its own research, development and the like.

2. to run the Source Code provided by T-Engine Forum hereunder for its own research, development and the like.

3. to run the Source Code modified in accordance with the provision of Article 4.3 (1) above for its own research, development and the like.

4. to distribute the Binary Code created from the Source Code provided by T-Engine Forum hereunder or from the Source Code modified in accordance with the provision of Article 4.3 (1) above.

4. In accordance with the license granted under Article 4.1 above, the System Developer may perform the following acts:

1. to perform any and all acts set forth in the Article 4.3 above.

2. to develop and manufacture the Embedded Product containing the Binary Code, and, whether with or without payment, provide the End User with the same and make the Binary Code available to the End User on the Embedded Product.

5. The Source Code User and the System Developer shall be obligated to give a notice that the Source Code is used, in such a way as separately specified by T-Engine Forum, when they use the Source Code or the Binary Code, or make the Binary Code available for the End User on the Embedded Product.

Article 5. Distribution of Modified Source Code

1. Any of A- members of T-Engine Forum may become the Distributor of Modification by obtaining the approval of T-Engine Forum through the registration procedure as prescribed by the Forum provided that only the department of the A- member which has taken the registration procedure may distribute the Modified Source Code in such a way as provided for in this Article as long as it holds the Amembership.

2. The Distributor of Modification may create the Modified Source Code based on the Source Code provided by T-Engine Forum and the Patch for Modification to be applied to create such Modified Source Code from the Source Code.

3. The Distributor of Modification shall, prior to the distribution, inform T-Engine Forum of and register a name and description of the Modified Source Code in such a way as specified by T-Engine Forum.

4. The Distributor of Modification shall determine the name of the Modified Source Code subject to the rules separately established by T-Engine Forum and publish an appropriate notice as required by the rules on the Patch for Modification and the Modified Source Code.

5. The Distributor of Modification may distribute the Modified Source Code to a third party, whether with or without payment, provided that the Distributor of Modification shall take the necessary measures to prohibit the third party from making the re-Distribution of the Modified Source Code.

6. Developer with the Patch for Modification. Provided. however, that the Distributor of Modification shall be obligated to confirm that the System Developer is the Source Code User duly licensed under Article 4.1.

7. The Distributor of Modification may perform the Vicarious Execution of Patch Processing for the System Developer.

8. The System Developer shall not distribute the Modified Source Code in further modified form to any third party as a stand-alone software product.

9. The System Developer may. under the same obligation as imposed in Article 4.5, make the Embedded Product available for the End User through use of the Patch for Modification distributed by the Distributor of Modification or the Derivative Works obtained through the Vicarious Execution of Patch Processing.

Article 6. Distribution and Registration of the Ported Source Code

1. The Source Code User and the System Developer may, whether with or without charge, distribute to any third party only the following parts of the Ported Source Code on the T-Engine Hardware or the Similar Hardware to T-Engine Hardware:

1. The Hardware-dependent Part and/or Compiler-dependent Part: provided that the Source Code User and the System Developer shall inform T-Engine Forum of, and T-Engine Forum may publish, a method for distributing said Part(s) to third parties.

2. The Header File; provided that the Header File shall be distributed together with the Binary Code of the Ported Source Code.

2. Any member of T-Engine Forum may request T-Engine Forum to register and distribute, as an original source code for T-Kernel, the Ported Source Code on the T-Engine Hardware or the Similar Hardware to T-Engine Hardware.

3. Any member of T-Engine Forum who requests the distribution mentioned in the preceding paragraph shall accede to the following conditions:

1. The member shall confirm that the object hardware is the T-Engine Hardware or the Similar Hardware to T-Engine Hardware.

2. The member shall provide T-Engine Forum with a complete set of operational environment for the object hardware and T-Kernel free of charge when requesting the distribution.

3. The member shall submit test results of the Ported Source Code to T-Engine Forum when requesting the distribution.

4. In the event that T-Engine Forum accepts the request mentioned in Article 6.2, T-Engine Forum shall register and distribute the Ported Source Code as the Source Code for T-Kernel. Provided, however. that the Ported Source Code may be treated in the same way as the Modified Source Code until the time of registration hereunder.

5. The provision set forth in Article 3 shall apply to the Ported Source Code registered in accordance with this Article.

Article 7. Use for Other Purpose

1. Any use of the Source Code, the Modified Source Code or the Ported Source Code other than those stipulated in Articles 4. 5 and 6 shall be subject to the prior approval of T-Engine Forum.

Article 8. Limited Warranty

1. T-Engine Forum and the copyright holder of the Source Code warrant that the Source Code does not infringe third party's copyrights. Provided, however, that T-Engine Forum and the copyright holder of the Source Code make no warranty as to the Hardware-dependent Part and/or Compiler- dependent Part set forth in Article 6.2 in the Ported Source Code by any third party.

2. Neither T-Engine Forum nor the copyright holder of the Source Code warrants that the Source Code will fit for any particular purpose of the Source Code User.

3. Neither T-Engine Forum nor the copyright holder of the Source Code warrants that the Source Code does not infringe any third party's industrial property rights. In no event shall T-Engine Forum and the copyright holder of the Source Code be liable for any dispute which may arise between the Source Code User and a third party in connection with the third party's industrial property rights.

Article 9. Indemnity

1. Neither T-Engine Forum nor the copyright holder of the Source Code shall be liable for any damages (including, but not limited to, damages resulting from loss of profit, business interruption, loss of business information or any other pecuniary damage) arising out of use or impossibility of use of the Source Code, even if T-Engine Forum and the copyright holder have been informed of the possibility of such damages.

Article 10. Breach of Agreement

1. In case that T-Engine Forum considers that this License Agreement is breached or that the popularization of T-Kernel is obstructed, T-Engine Forum shall take measures to correct such breach or such obstruction, take measures on the ground of copyright infringement, or take any other necessary measures against the breaching person or the obstructing person, regardless of whether or not the said person is a member of T-Engine Forum.

2. In case of breach of this License Agreement by a member of T-Engine Forum. T-Engine Forum may take appropriate measures against the member; for example, the member is disqualified from membership, depending on what kind of breach has been committed by it.

3. Any legal dispute which may arise in relation to any breach of this License Agreement shall be subject to the exclusive jurisdiction of the Tokyo District Court.

Article 11. Governing Law and Language

1. This License Agreement shall be governed by and interpreted under the laws of Japan.

2. This License Agreement is executed in both Japanese text and English text provided that the Japanese text shall govern the interpretation and performance of this License Agreement.

Apache License 2.0

Component	Name License	URL
mDNSResponder_bonjour	Apache License 2.0	http://www.apache.org/licenses/LICENSE-2.0

TERMS AND CONDITIONS FOR USE, REPRODUCTION, AND DISTRIBUTION

1. Definitions.

"License" shall mean the terms and conditions for use, reproduction. and distribution as defined by Sections 1 through 9 of this document.

"Licensor" shall mean the copyright owner or entity authorized by the copyright owner that is granting the License.

"Legal Entity" shall mean the union of the acting entity and all other entities that control, are controlled by, or are under common control with that entity. For the purposes of this definition, "control" means (i) the power, direct or indirect, to cause the direction or management of such entity, whether by contract or otherwise, or (ii) ownership of fifty percent (50%) or more of the outstanding shares, or (iii) beneficial ownership of such entity.

"You" (or "Your") shall mean an individual or Legal Entity exercising permissions granted by this License. "Source" form shall mean the preferred form for making modifications, including but not limited to software source code, documentation source, and configuration files.

"Object" form shall mean any form resulting from mechanical transformation or translation of a Source form, including but not limited to compiled object code, generated documentation, and conversions to other media types.

"Work" shall mean the work of authorship, whether in Source or Object form, made available under the License, as indicated by a copyright notice that is included in or attached to the work (an example is provided in the Appendix below).

"Derivative Works" shall mean any work, whether in Source or Object form, that is based on (or derived from) the Work and for which the editorial revisions, annotations, elaborations, or other modifications represent, as a whole, an original work of authorship. For the purposes of this License, Derivative Works shall not include works that remain separable from, or merely link (or bind by name) to the interfaces of, the Work and Derivative Works thereof.

"Contribution" shall mean any work of authorship, including the original version of the Work and any modifications or additions to that Work or Derivative Works thereof, that is intentionally submitted to Licensor for inclusion in the Work by the copyright owner or by an individual or Legal Entity authorized to submit on behalf of the copyright owner. For the purposes of this definition, "submitted" means any form of electronic, verbal, or written communication sent to the Licensor or its representatives, including but not limited to communication on electronic mailing lists, source code control systems, and issue tracking systems that are managed by, or on behalf of, the Licensor for the purpose of discussing and improving the Work, but excluding communication that is conspicuously marked or otherwise designated in writing by the copyright owner as "Not a Contribution." "Contributor" shall mean Licensor and any individual or Legal Entity on behalf of whom a Contribution has been received by Licensor and subsequently incorporated within the Work.

2. Grant of Copyright License. Subject to the terms and conditions of this License, each Contributor hereby grants to You a perpetual, worldwide, non-exclusive, no-charge, royalty-free, irrevocable copyright license to reproduce, prepare Derivative Works of, publicly display, publicly perform, sublicense, and distribute the Work and such Derivative Works in Source or Object form.

3. Grant of Patent License. Subject to the terms and conditions of this License, each Contributor hereby grants to You a perpetual, worldwide, non-exclusive, no-charge, royalty-free, irrevocable (except as stated in this section) patent license to make, have made, use, offer to sell, sell, import, and otherwise transfer the Work, where such license applies only to those patent claims licensable by such Contributor that are necessarily infringed by their Contribution(s) alone or by combination of their Contribution(s) with the Work to which such Contribution(s) was submitted. If You institute patent litigation against any entity (including a cross-claim or counterclaim in a lawsuit) alleging that the Work or a Contribution incorporated within the Work constitutes direct or contributory patent infringement, then any patent licenses granted to You under this License for that Work shall terminate as of the date such litigation is filed.

4. Redistribution. You may reproduce and distribute copies of the Work or Derivative Works thereof in any medium, with or without modifications, and in Source or Object form, provided that You meet the following conditions:

(a) You must give any other recipients of the Work or Derivative Works a copy of this License; and

(b) You must cause any modified files to carry prominent notices stating that You changed the files; and

(c) You must retain, in the Source form of any Derivative Works that You distribute, all copyright, patent, trademark, and attribution notices from the Source form of the Work, excluding those notices that do not pertain to any part of the Derivative Works; and

(d) If the Work includes a "NOTICE" text file as part of its distribution, then any Derivative Works that You distribute must include a readable copy of the attribution notices contained within such NOTICE file, excluding those notices that do not pertain to any part of the Derivative Works, in at least one of the following places: within a NOTICE text file distributed as part of the Derivative Works; within the Source form or documentation, if provided along with the Derivative Works; or, within a display generated by the Derivative Works, if and wherever such third-party notices normally appear. The contents of the NOTICE file are for informational purposes only and do not modify the License. You may add Your own attribution notices within Derivative Works that You distribute, alongside or as an addendum to the NOTICE text from the Work, provided that such additional attribution notices cannot be construed as modifying the License.

You may add Your own copyright statement to Your modifications and may provide additional or different license terms and conditions for use, reproduction, or distribution of Your modifications, or for any such Derivative Works as a whole, provided Your use, reproduction, and distribution of the Work otherwise complies with the conditions stated in this License.

5. Submission of Contributions. Unless You explicitly state otherwise, any Contribution intentionally submitted for inclusion in the Work by You to the Licensor shall be under the terms and conditions of this License, without any additional terms or conditions. Notwithstanding the above, nothing herein shall supersede or modify the terms of any separate license agreement you may have executed with Licensor regarding such Contributions.

6. Trademarks. This License does not grant permission to use the trade names, trademarks, service marks, or product names of the Licensor, except as required for reasonable and customary use in describing the origin of the Work and reproducing the content of the NOTICE file.

7. Disclaimer of Warranty. Unless required by applicable law or agreed to in writing, Licensor provides the Work (and each Contributor provides its Contributions) on an "AS IS" BASIS, WITHOUT WARRANTIES OR CONDITIONS OF ANY KIND, either express or implied, including, without limitation, any warranties or conditions of TITLE, NON-INFRINGEMENT, MERCHANTABILITY, or FITNESS FOR A PARTICULAR PURPOSE. You are solely responsible for determining the appropriateness of using or redistributing the Work and assume any risks associated with Your exercise of permissions under this License.

8. Limitation of Liability. In no event and under no legal theory, whether in tort (including negligence), contract, or otherwise, unless required by applicable law (such as deliberate and grossly negligent acts) or agreed to in writing, shall any Contributor be liable to You for damages, including any direct, indirect, special, incidental, or consequential damages of any character arising as a result of this License or out of the use or inability to use the Work (including but not limited to damages for loss of goodwill, work stoppage, computer failure or malfunction, or any and all other commercial damages or losses), even if such Contributor has been advised of the possibility of such damages.

9. Accepting Warranty or Additional Liability. While redistributing the Work or Derivative Works thereof, You may choose to offer, and charge a fee for, acceptance of support, warranty, indemnity, or other liability obligations and/or rights consistent with this License. However, in accepting such obligations, You may act only on Your own behalf and on Your sole responsibility, not on behalf of any other Contributor, and only if You agree to indemnify, defend, and hold each Contributor harmless for any liability incurred by, or claims asserted against, such Contributor by reason of your accepting any such warranty or additional liability.

END OF TERMS AND CONDITIONS

APPENDIX: How to apply the Apache License to your work.

To apply the Apache License to your work, attach the following boilerplate notice, with the fields enclosed by brackets "[]" replaced with your own identifying information. (Don't include the brackets!) The text should be enclosed in the appropriate comment syntax for the file format. We also recommend that a file or class name and description of purpose be included on the same "printed page" as the copyright notice for easier identification within third-party archives.

Copyright [yyyy] [name of copyright owner]

Licensed under the Apache License, Version 2.0 (the "License"); you may not use this file except in compliance with the License. You may obtain a copy of the License at http://www.apache.org/licenses/LICENSE-2.0

Unless required by applicable law or agreed to in writing, software distributed under the License is distributed on an "AS IS" BASIS, WITHOUT WARRANTIES OR CONDITIONS OF ANY KIND, either express or implied. See the License for the specific language governing permissions and limitations under the License.

BZip2 License

This program, "bzip2", the associated library "libbzip2", and all documentation, are copyright (C) 1996-2007 Julian R Seward. All rights reserved.

Component Name	License	URL
bzip2-1.0.6	Bzip2	http://www.bzip.org/

Redistribution and use in source and binary forms, with or without modification, are permitted provided that the following conditions are met:

1. Redistributions of source code must retain the above copyright notice, this list of conditions and the following disclaimer.

2. The origin of this software must not be misrepresented; you must not claim that you wrote the original software. If you use this software in a product, an acknowledgment in the product documentation would be appreciated but is not required.

3. Altered source versions must be plainly marked as such, and must not be misrepresented as being the original software.

4. The name of the author may not be used to endorse or promote products derived from this software without specific prior written permission.

THIS SOFTWARE IS PROVIDED BY THE AUTHOR "AS IS" AND ANY EXPRESS OR IMPLIED WARRANTIES, INCLUDING, BUT NOT LIMITED TO, THE IMPLIED WARRANTIES OF MERCHANTABILITY AND FITNESS FOR A PARTICULAR PURPOSE ARE DISCLAIMED. IN NO EVENT SHALL THE AUTHOR BE LIABLE FOR ANY DIRECT, INDIRECT, INCIDENTAL, SPECIAL, EXEMPLARY, OR CONSEQUENTIAL DAMAGES (INCLUDING, BUT NOT LIMITED TO, PROCUREMENT OF SUBSTITUTE GOODS OR SERVICES; LOSS OF USE, DATA, OR PROFITS; OR BUSINESS INTERRUPTION) HOWEVER CAUSED AND ON ANY THEORY OF LIABILITY, WHETHER IN CONTRACT, STRICT LIABILITY, OR TORT (INCLUDING NEGLIGENCE OR OTHERWISE) ARISING IN ANY WAY OUT OF THE USE OF THIS SOFTWARE, EVEN IF ADVISED OF THE POSSIBILITY OF SUCH DAMAGE.

Julian Seward, jseward@bzip.org

bzip2/libbzip2 version 1.0.5 of 10 December 2007

University of Illinois / NCSA Open Source License

Copyright (c) 1999-2007, The Board of Trustees of the University of Illinois All Rights Reserved.

Component Name	License
iperf-2.0.5	University of Illinois / NCSA Open Source

Iperf performance test

Mark Gates

Ajay Tirumala

Jim Ferguson

Jon Dugan

Feng Qin

Kevin Gibbs

John Estabrook

National Laboratory for Applied Network Research

National Center for Supercomputing Applications

University of Illinois at Urbana-Champaign

http://www.ncsa.uiuc.edu

Permission is hereby granted, free of charge, to any person obtaining a copy of this software (Iperf) and associated documentation files (the "Software"), to deal in the Software without restriction, including without limitation the rights to use, copy, modify, merge, publish, distribute, sublicense, and/or sell copies of the Software, and to permit persons to whom the Software is furnished to do so, subject to the following conditions:

Redistributions of source code must retain the above copyright notice, this list of conditions and the following disclaimers.

Redistributions in binary form must reproduce the above copyright notice, this list of conditions and the following disclaimers in the documentation and/or other materials provided with the distribution.

Neither the names of the University of Illinois, NCSA, nor the names of its contributors may be used to endorse or promote products derived from this Software without specific prior written permission. THE SOFTWARE IS PROVIDED "AS IS", WITHOUT WARRANTY OF ANY KIND, EXPRESS OR IMPLIED, INCLUDING BUT NOT LIMITED TO THE WARRANTIES OF MERCHANTABILITY, FITNESS FOR A PARTICULAR PURPOSE AND NONINFRINGEMENT. IN NO EVENT SHALL THE CONTIBUTORS OR COPYRIGHT HOLDERS BE LIABLE FOR ANY CLAIM, DAMAGES OR OTHER LIABILITY, WHETHER IN AN ACTION OF CONTRACT, TORT OR OTHERWISE, ARISING FROM, OUT OF OR IN CONNECTION WITH THE SOFTWARE OR THE USE OR OTHER DEALINGS IN THE SOFTWARE.

PHP 3.01 License

The PHP License, version 3.01 Copyright (c) 1999 - 2010 The PHP Group. All rights reserved.

Component Name	License	URL
php-5.2.17	PHP 3.01	http://www.php.net/distributions

Redistribution and use in source and binary forms, with or without modification, is permitted provided that the following conditions are met:

1. Redistributions of source code must retain the above copyright notice, this list of conditions and the following disclaimer.
2. Redistributions in binary form must reproduce the above copyright notice, this list of conditions and the following disclaimer in the documentation and/or other materials provided with the distribution.
3. The name "PHP" must not be used to endorse or promote products derived from this software without prior written permission. For written permission, please contact group@php.net.
4. Products derived from this software may not be called "PHP", nor may "PHP" appear in their name, without prior written permission from group@php.net. You may indicate that your software works in conjunction with PHP by saying "Foo for PHP" instead of calling it "PHP Foo" or "phpfoo"
5. The PHP Group may publish revised and/or new versions of the license from time to time. Each version will be given a distinguishing version number. Once covered code has been published under a particular version of the license, you may always continue to use it under the terms of that version. You may also choose to use such covered code under the terms of any subsequent version of the license published by the PHP Group. No one other than the PHP Group has the right to modify the terms applicable to covered code created under this License.
6. Redistributions of any form whatsoever must retain the following acknowledgment: "This product includes PHP software, freely available from <http://www.php.net/software/>".

THIS SOFTWARE IS PROVIDED BY THE PHP DEVELOPMENT TEAM "AS IS" AND ANY EXPRESSED OR IMPLIED WARRANTIES, INCLUDING, BUT NOT LIMITED TO, THE IMPLIED WARRANTIES OF MERCHANTABILITY AND FITNESS FOR A PARTICULAR PURPOSE ARE DISCLAIMED. IN NO EVENT SHALL THE PHP DEVELOPMENT TEAM OR ITS CONTRIBUTORS BE LIABLE FOR ANY DIRECT, INDIRECT, INCIDENTAL, SPECIAL, EXEMPLARY, OR CONSEQUENTIAL DAMAGES (INCLUDING, BUT NOT LIMITED TO, PROCUREMENT OF SUBSTITUTE GOODS OR SERVICES; LOSS OF USE, DATA, OR PROFITS; OR BUSINESS INTERRUPTION) HOWEVER CAUSED AND ON ANY THEORY OF LIABILITY, WHETHER IN CONTRACT, STRICT LIABILITY, OR TORT (INCLUDING NEGLIGENCE OR OTHERWISE) ARISING IN ANY WAY OUT OF THE USE OF THIS SOFTWARE, EVEN IF ADVISED OF THE POSSIBILITY OF SUCH DAMAGE.

This software consists of voluntary contributions made by many individuals on behalf of the PHP Group. The PHP Group can be contacted via Email at group@php.net.

For more information on the PHP Group and the PHP project, please see <http://www.php.net>. PHP includes the Zend Engine, freely available at <http://www.zend.com>.

zlib / libpng License

This software is provided 'as-is', without any express or implied warranty. In no event will the authors be held liable for any damages arising from the use of this software.

Component Name	License	URL
zlib-1.2.8	zlib / libpng	http://zlib.net/

Copyright (C) 1995-2010 Jean-loup Gailly and Mark Adler

Permission is granted to anyone to use this software for any purpose, including commercial applications, and to alter it and redistribute it freely, subject to the following restrictions:

1. The origin of this software must not be misrepresented; you must not claim that you wrote the original software. If you use this software in a product, an acknowledgment in the product documentation would be appreciated but is not required.
2. Altered source versions must be plainly marked as such, and must not be misrepresented as being the original software.
3. This notice may not be removed or altered from any source distribution.

Jean-loup Gailly Mark Adler

jloup@gzip.org madler@alumni.caltech.edu

The data format used by the zlib library is described by RFCs (Request for Comments) 1950 to 1952 in the files http://www.ietf.org/rfc/rfc1950.txt (zlib format), rfc1951.txt (deflate format) and rfc1952.txt (gzip format).

Any changes or modifications in construction of this device which are not expressly approved by the party responsible for compliance could void the user's authority to operate the equipment.

This device complies with part 15 of the FCC Rules. Operation is subject to the following two conditions: (1) This device may not cause harmful interference, and (2) this device must accept any interference received, including interference that may cause undesired operation.

This equipment has been tested and found to comply with the limits for a Class A digital device, pursuant to part 15 of the FCC Rules. These limits are designed to provide reasonable protection against harmful interference when the equipment is operated in a commercial environment.
This equipment generates, uses, and can radiate radio frequency energy and, if not installed and used in accordance with the instruction manual, may cause harmful interference to radio communications. Operation of this equipment in a residential area is likely to cause harmful interference in which case the user will be required to correct the interference at his own expense.

Hanwha Techwin cares for the environment at all product manufacturing stages, and is taking measures to provide customers with more environmentally friendly products.
The Eco mark represents Hanwha Techwin's devotion to creating environmentally friendly products, and indicates that the product satisfies the EU RoHS Directive.

Correct Disposal of This Product (Waste Electrical & Electronic Equipment)

(Applicable in the European Union and other European countries with separate collection systems)

This marking on the product, accessories or literature indicates that the product and its electronic accessories (e.g. charger, headset, USB cable) should not be disposed of with other household waste at the end of their working life. To prevent possible harm to the environment or human health from uncontrolled waste disposal, please separate these items from other types of waste and recycle them responsibly to promote the sustainable reuse of material resources.
Household users should contact either the retailer where they purchased this product, or their local government office, for details of where and how they can take these items for environmentally safe recycling.
Business users should contact their supplier and check the terms and conditions of the purchase contract. This product and its electronic accessories should not be mixed with other commercial wastes for disposal.

Correct disposal of batteries in this product

(Applicable in the European Union and other European countries with separate battery return systems.)

This marking on the battery, manual or packaging indicates that the batteries in this product should not be disposed of with other household waste at the end of their working life. Where marked, the chemical symbols Hg, Cd or Pb indicate that the battery contains mercury, cadmium or lead above the reference levels in EC Directive 2006/66. If batteries are not properly disposed of, these substances can cause harm to human health or the environment.
To protect natural resources and to promote material reuse, please separate batteries from other types of waste and recycle them through your local, free battery return system.

Head Office
6, Pangyo-ro 319 beon-gil, Bundang-gu, Seongnam-si,
Gyeonggi-do, 463-400 Rep. of KOREA
Tel : +82.70.7147.8753 Fax : +82.31.8018.3740
www.hanwha-security.com

Hanwha Techwin America
500 Frank W. Burr Blvd. Suite 43 Teaneck, NJ 07666
Toll Free +1.877.213.1222 Direct +1.201.325.6920
Fax +1.201.373.0124
www.hanwha-security.com

Hanwha Techwin Europe
Heriot House, Heriot Road, Chertsey, Surrey, KT16 9DT, United Kingdom
Tel +44.1932.57.8100 Fax +44.1932.57.8101
www.hanwha-security.eu

Hanwha
Techwin

PRODUCT OVERVIEW

QND-6073R/QND-6083R

Unit : mm (inch)

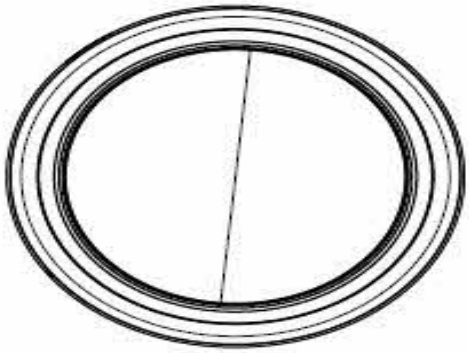

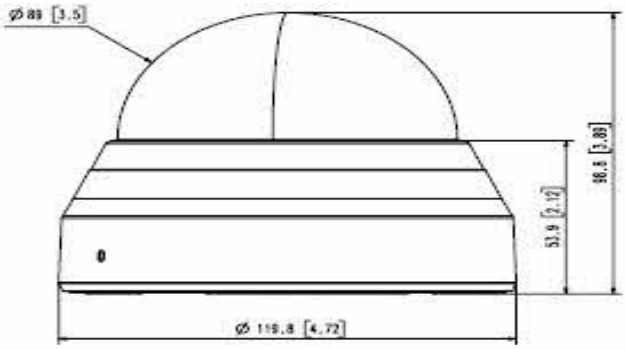

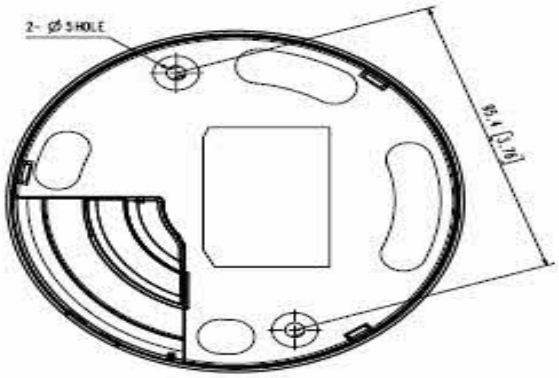

GROUP-TEK®

RoHS

承 认 书

SPECIFICATION FOR APPROVAL

客户名称 CUSTOMER	
客户料号 MODEL NO.	
产品名称 PART NAME	POWER TRANSFORMER
产品型号 PART TYPE	PDT2433ASR
版本 REV	X4
签名 SIGNATURE	制图：Drawn by 联泰兴 2018-05-15 黄春梅　审核：Checked by 联泰兴 2018-05-15 杨时启　批准：Approved by 联泰兴 2018-05-15 欧阳佰萍
客户承认 CUSTOMER APPROVAL	承认印: SIGNET　　签名: SIGNATURE

深 圳 市 联 泰 兴 电 子 科 技 有 限 公 司
SHENZHEN GROUP-TEK ELECTRONICS TECHNOLOGY CO., LTD
地 址 ：深圳市宝安区石岩街道应人石工业区伟泰路 1栋（P. C：518108）
ADD: No.1 Block, WeiTai Rd. Ying Ren Shi Industry Park, Shi Yan Sub-District, Bao'An ShenZhen,
TEL：+86-755-29810619　29810976　FAX：+86-755-29810159
Http://www.group-tek.com　E-mail:sale1@group-tek.com

GROUP-TEK®
A Leading Supplier of Magnetic Components

PDT2433ASR

1.Revision History:

Revision	Revision Descriptions	Drawn by	Checked by	Approved by	Issued data
X0	New revision	黄石凤	杨时启	欧阳佰萍	2015-04-23
X1	Change the DCR	黄石凤	杨时启	欧阳佰萍	2015-04-30
X2	Add Mechanical Dimensions “E”.	黄石凤	杨时启	欧阳佰萍	2016-05-30
X3	Change kapton tape to wrap core	黄石凤	杨时启	欧阳欧阳	2017-06-29
X4	Correct glue model name	黄石凤	杨时启	欧阳欧阳	2018-05-15

No.1 Block, WeiTai Rd. Ying Ren Shi Industry Park, Shi Yan Sub-District, Bao'An ShenZhen TEL:+86-755-29810619 FAX:+86-0755-29810159 Http://www.group-tek.com

GROUP-TEK®
A Leading Supplier of Magnetic Components

PDT2433ASR

2. Mechanical Dimensions:

FRONT VIEW

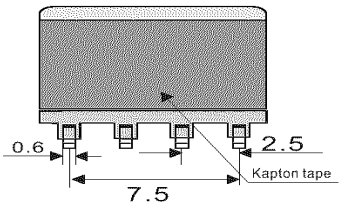

TOP VIEW

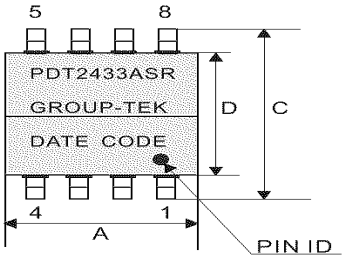

SIDE VIEW

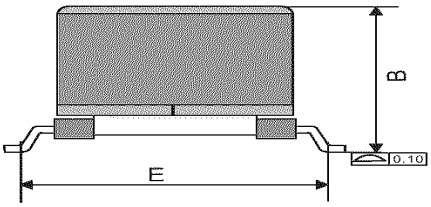

Note:
1.Wrap 2Ts of 6mm tape around the finished part.

Unit: mm

A MAX	B MAX	C MAX	D TYP	E TYP
12.7	11.43	15.24	10.60	12.60

SUGGESTED PAD LAYOUT

Unit: mm Tolerances:+/-0.2

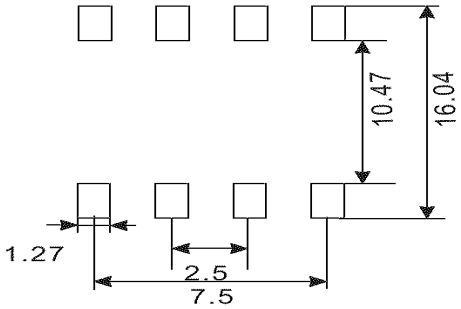

3.Electrical Characteristics :

Specifications Test: at 25 °C. Operating Temperature: -40 to +105°C			
NO.	ITEM	TEST CONDITION	SPECIFICATION
1	Inductance	(3-4)@200kHZ, 0.1v	155uH+/-10%.
2	Inductance	(2-1)@200kHZ, 0.1v	30uH+/-15%.
3	Inductance	(7-5)//(8-6)@200kHZ, 0.1v	33uH+/-15%.
4	Leakage Inductance	(3-4) with shorted other@200kHZ, 0.1v	3.6uH MAX.
5	DCR	(3-4) @ 25°C	0.414 Ω Max.
6		(7+8)-(5+6) @ 25°C	0.15Ω Max.
7		(2-1) @ 25°C	0.30Ω Max.
8	HI-POT	PRI TO SEC	1500Vac 1mA 3Sec.
9	T/R	(3-4):(9+10-7+8):(2-1)	33:15:14±2%.

No.1 Block, WeiTai Rd. Ying Ren Shi Industry Park, Shi Yan Sub-District, Bao'An ShenZhen TEL:+86-755-29810619 FAX:+86-0755-29810159 Http://www.group-tek.com

GROUP-TEK®
A Leading Supplier of Magnetic Components

PDT2433ASR

4.Overhauling List.

NO.	ITEM	SPECIFICATION
1	Tape turns	2T
2	Margin tape thickness	0.15mm
3	Winding turns	N1:33T N2:15T N3:14T
4	Pins order/Pin connection .	1T
5	Marking Information	PDT2433ASR GROUP-TEK DATE CODE ●
6	Gap the center leg	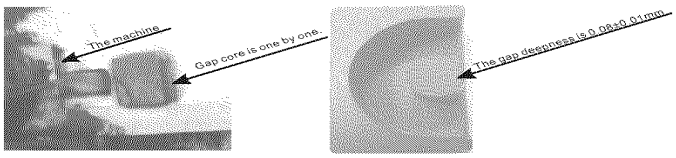
7	Solder Temperature	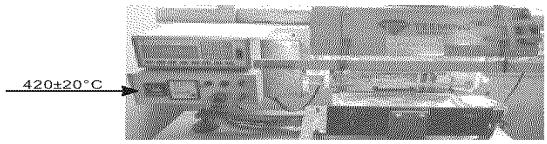

GROUP-TEK®
A Leading Supplier of Magnetic Components

PDT2433ASR

5.Winding Information:

WINDING SEQ.	ST-FN	WIRE/FOIL	TURNS	WRAP INSUL.	MARGIN TAPE	SLEEVE	NOTE
1	3--4	0.30mm 2UEW	33	2T w6.0mm	N/A	N/A	1
2	8--6 7--5	0.20mm 2UEW R 0.20mm 2UEW N	15	2T w6.0mm	2T W0.60mm	N/A	1
3	2--1	0.23mm 2UEW	14	2T w6.0mm	2T W0.80mm	N/A	1

NOTE :
1. –Place the bobbin pin 1 right side of operator.

6.Schematic:

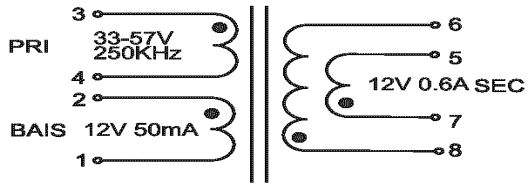

7.Winding construction

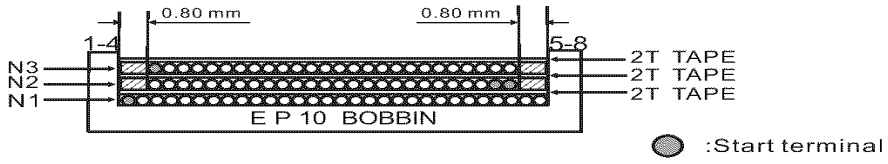

8.Material List

NO.	ITEM.	MATERIALS	SUPPLIERS/MANUFAXTURES	UL FILE NO.
1	BOBBIN	PHENOLIC T375J UL RATING: 94V-0	Chang Chun Plastics Co.,Ltd	E59481 (S)
2	CORE	E P10 PG 232A	High-tech Electronics Co.,Ltd	N/A
3	WIRE	POLYURETHANE ENAMELED TYPE NO: 2UEW 0.23mm 0.30mm THERMAL RATING:180°C	Shing Shun Magnet wire(HuiZhou) Co.,Ltd	E255839
4	TAPE	ADHESIVE POLYESTER TAPE TYPE NO.:W-001 THERMAL RATING:130°C yellow tape: for inner coils	Shen zhen Weichuangda Packing material Co.,Ltd	E333581
5	TAPE	ADHESIVE POLYESTER TAPE TYPE NO.:519(kapton tape) THERMAL RATING:200°C Kapton tape: for outside of core	Shen zhen guangye electronics technology Co.,Ltd	E309332
6	SOLDER	SN/CU: 99.3/0.7	Gao Xin stannum industry Co.,Ltd	N/A
7	Glue	E-500(TX) THERMAL RATING:130°C	Dong Guan city eatto electronic material Co.,Ltd	E218090

9.PACKING INFORMATION:

DESCRIPTION	QTY
PIECES PER REEL	250
PIECES PER POCKET	1
PIECES PER BOX	750
REEL PER BOX	3
GROSS WEIGHT PER BOX(KG)	TBD
NET WEIGHT PER BOX(KG)	TBD

GROUP-TEK®
A Leading Supplier of Magnetic Components

PDT2433ASR

Tape and Reel Package（包装图）

1.TapeSize:

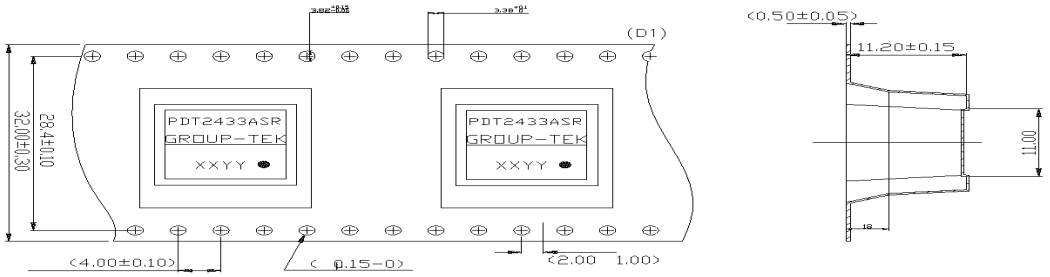

2.Reel Size:

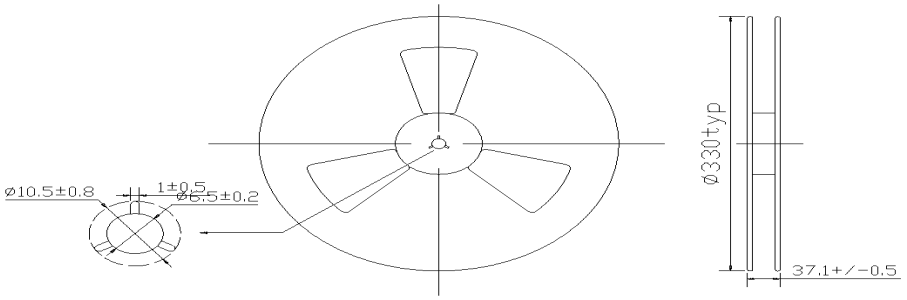

3.Packaging:

3.1 Quantity per reel: 250pcs.
3.2 Quantity per carton: 750pcs.
3.3 Carton size: 37.3*37.3*21CM3.
3.4 Unit weight: 3.95g.
3.5 Carton weight: 5.11kg.

No.1 Block, WeiTai Rd. Ying Ren Shi Industry Park, Shi Yan Sub-District, Bao'An ShenZhen TEL:+86-755-29810619 FAX:+86-0755-29810159 Http://www.group-tek.com

GROUP-TEK®
A Leading Supplier of Magnetic Components

PDT2433ASR

1.Recommended Lead Free IR Reflow Curve

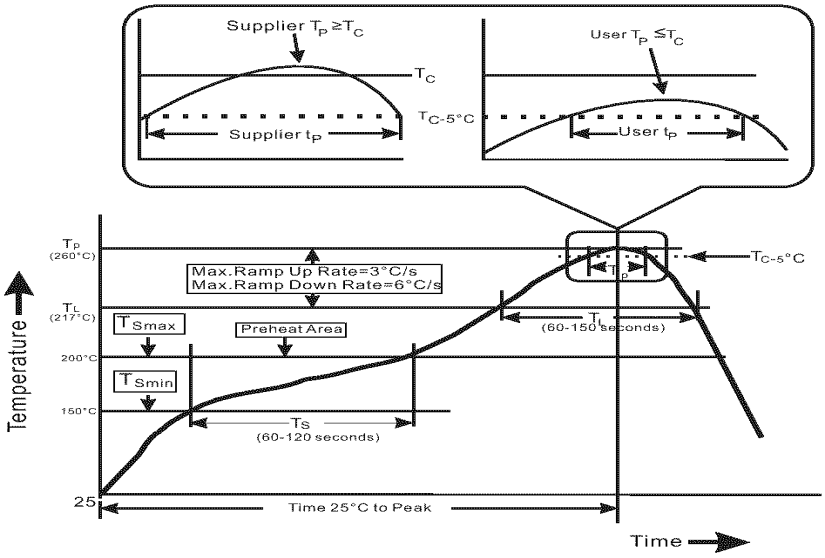

Item	Profile Feature	Sn-Pb Eutectic Assembly	Pb-Free Assembly
1	Preheat/Soak Temperature Min (Tsmin) Temperature Max (Tsmax) Time (ts) from (Tsmin to Tsmax)	100 °C 150 °C 60-120 seconds	150 °C 200 °C 60-120 seconds
2	Ramp-up rate (TL to Tp)	3 °C/second max.	3 °C/second max.
3	Liquidous temperature (TL) Time (tL) maintained above TL	183 °C 60-150 seconds	217 °C 60-150 seconds
4	Peak package body temperature (Tp)	For users Tp must not exceed the Classification temp in Table 4-1(IPC/JEDEC J-STD-020D.1). For suppliers Tp must equal or exceed the Classification temp in Table 4-1(IPC/JEDEC J-STD-020D.1).	For users Tp must not exceed the Classification temp in Table 4-2(IPC/JEDEC J-STD-020D.1). For suppliers Tp must equal or exceed the Classification temp in Table 4-2(IPC/JEDEC J-STD-020D.1).
5	Time (tp)* within 5 °C of the specified classification temperature (Tc), seeFigure 5-1 (IPC/JEDEC J-STD-020D.1).	20* seconds	30* seconds
6	Ramp-down rate (Tp to TL)	6 °C/second max.	6 °C/second max.
7	Time 25 °C to peak temperature	6 minutes max.	8 minutes max.
* Tolerance for peak profile temperature (Tp) is defined as a supplier minimum and a user maximum.			

No.1 Block, WeiTai Rd. Ying Ren Shi Industry Park, Shi Yan Sub-District, Bao'An ShenZhen TEL:+86-755-29810619 FAX:+86-0755-29810159 Http://www.group-tek.com

Note:

1: All temperatures refer to the center of the package, measured on the package body surface that is facing up during assembly reflow (e.g., live-bug). Ifparts are reflowed in other than the normal live-bug assembly reflow orientation (i.e., dead-bug), Tp shall be within ± 2 °C of the live-bug Tp and still to accurately measure actual peak package body temperaturesrefer to JEP140 for recommended thermocouple use.meet the Tc requirements, otherwise, the profile shall be adjusted to achieve the latter.

2: Reflow profiles in this document are for classification/preconditioning and are not meant to specify board assembly profiles. Actual board assembly profiles should be developed based on specific process needs and board designs and should not exceed the parameters in Table 5-2.For example, if Tc is 260 °C and time tp is 30 seconds, this means the following for the supplier and the user. For a supplier: The peak temperature must be at least 260 °C. The time above 255 °C must be at least 30 seconds.For a user: The peak temperature must not exceed 260 °C. The time above 255 °C must not exceed 30 seconds.

3: All components in the test load shall meet the classification profile requirements.

4: SMD packages classified to a given moisture sensitivity level by using Procedures or Criteria defined within any previous version of J-STD-020,JESD22-A112 (rescinded), IPC-SM-786 (rescinded) do not need to be reclassified to the current revision unless a change in classification level or a higher peak classification temperature is desired.

2. Reliability Test Criteria.

2.1 Operating temperature range: 0℃ to 70℃
2.2 Terminal strength: Pull test withstand 9.8N 60+/-0.5S no looseness or movement.
2.3 Solderbility: Dipped in 245℃+/-5℃ molten solder for 3+/-0.5 seconds,95% min shall besmooth any and bright
2.4 Resistance to soldering heat : Convection reflow condition setting: peak temperature at 260℃+0/-5℃ above 217℃ for 60-150 seconds, ramp-up rate 2-3℃/s. Ramp-down rate 6℃/s Max. No mechanical problem found. No electrical failure found per our specification.
2.5 Vibration: 1.5mm amplitude total excursion 10-55-10 Hz traversed in 1minute, x.y.z, axis for 2 hours. Shall not be any abnormality.
2.6 Random drop (Packing condition): Height 60cm, 3 times on the wood floorboard ,shall not be any abnormality.
2.7 Damp Heat: 60+/-2℃, 93+/-3% RH 96 hours.
2.8 Change of temperature: exposed 5 cycle; each consisting of 30 minutes at -20+/-2℃, 2-3 minutes at 20+/-2℃,30 minutes at 85+/-2℃, 2-3 minutes at 20+/-2℃.

Remarks:

After reliability test per item 7,8,9,10 in prior to the test as specified, the transformer / coil would be exposed to the room temperature for 1-2 hours,the component meets all requirements according to this specification.

M/C: QND-6083R/KCH

S/N: [제조번호]
MAC: XX-XX-XX-XX-XX-XX

MAC ADDRESS: XX-XX-XX-XX-XX-XX

ITE
US LISTED
9T96 E158873

NETWORK CAMERA
MODEL: QND-6083R
DC 12V ⎓ 0.55A / PoE (48V ⎓) 0.16A
M/C: QND-6083R/KCH Fac. ID: D

제조년월 S/N: [제조번호]
MAC ADDRESS: XX-XX-XX-XX-XX-XX
CAN ICES-3(A)/NMB-3(A)
HANWHA TECHWIN CO.,LTD.
MADE IN KOREA

Project No. 4788960251 File E158873 Page 1

Compliance Review Conducted by: _____ Date _____

Printed Name Signature

Standard: SCC Requirements and Guidance - Product Certification Body Accreditation Program

Edition/Revision Date: 2016-04-06

Clause/Par. Reference and Construction Requirement	Comply Yes	Comply No	Comply N/A	Comments/Measurements	Inst. ID No.
9.2.3 CBs shall include dual language safety labeling within their product certification requirements, if so required by the standard or by the authority having jurisdiction.					
The manufacturer has confirmed they have the ability to include English and French safety labeling exactly as specified in the product standard; or, if NOT specified in the product standard, the ability to include English and French safety labelling consisting of markings associated with the signal words DANGER, WARNING, and CAUTION when required.	X			The ability of the manufacturer to include these markings was verified by either (1) visual inspection of the markings on the actual product or (2) draft of labels that will be applied to the product or (3) written confirmation from the customer of the markings that will appear on the product. If the product standard provides the exact translation, the evidence must match the exact translation. If the product standard does NOT provide the exact translation, the evidence must simply include both the English and French text (no verification of translation is required).	N/A

Project No. 4788960251 File E158873 Page 2

Compliance Review Conducted by: _____ Date _____

Printed Name Signature

Clause/Par. Reference and Construction Requirement	Comply			Comments/Measurements	Inst. ID No.
	Yes	No	N/A		
Manufacturer has a method to manage distribution of products, IF all products with the Canadian certification mark are NOT going to include the dual language.	X			Evaluation staff are to only verify that the manufacturer has a method to control distribution. Evaluation staff do not have to record the method of control nor are the evaluation staff expected to verify the effectiveness of the method of control. This requirement to verify that a method exists will be noted in the FUS Procedure. The UL Field Engineer will verify the method during surveillance. If the manufacturer is going to include the dual language on all products with the Canadian certification mark, then this item is N/A; no further action required.	N/A

SGS

TEST REPORT
IEC 62471 and/or EN 62471
Photobiological safety of lamps and lamp systems

Report Reference No. ..... :	F690501/RF-SAF011105
Order No.....	G-44-2019-01532
Tested by (name + signature) ..... :	Ethan Kim
Approved by (name + signature)..... :	Doonam Choi
Date of issue ..... :	May 16, 2019
Total number of pages ..... :	14 pages
Testing Laboratory..... :	SGS Korea Co., Ltd. Gunpo Laboratory
Address ..... :	14, LS-ro 182beon-gil, Gunpo-si, Gyeonggi-do, 15807, Republic of Korea
Applicant's name ..... :	Hanwha Techwin Co Ltd
Address ..... :	6 Pangyo-ro 319Beon-gil, Bundang-gu, Seongnam-si, Gyeonggi-do, 13488 KOREA
Test specification:	
Standard..... :	☒ IEC 62471: 2006 (First Edition) ☐ EN 62471: 2008
Test procedure ..... :	Test report
Non-standard test method..... :	N/A
Test Report Form No. ..... :	IECEN62471A
TRF Originator..... :	VDE Testing and Certification Institute
Master TRF ..... :	Dated 2009-05
TRF Modified by..... :	SGS Korea Co., Ltd. Gunpo Laboratory
Modified TRF Form No..... :	TRF No. SAF5102-IEC62471A(2015/11/11)(0)
Test item description ..... :	NETWORK CAMERA
Trade Mark ..... :	-
Manufacturer ..... :	Same as applicant
Model/Type reference ..... :	QND-6072R
Ratings ..... :	12 Vd.c.; 0,55 A or PoE 48 V d.c.; 0,16 A

Summary of testing: - The submitted samples were found to be in compliance with IEC 62471	
Tests performed (name of test and test clause): 4.3.1 Actinic UV hazard exposure limit for the skin and eye 4.3.2 Near-UV hazard exposure limit for eye 4.3.3 Retinal blue light hazard exposure limit 4.3.6 Retinal thermal hazard exposure limit – weak visual stimulus	**Testing location:** Refer to page 1.
Summary of compliance with National Differences: None	
Copy of marking plate: -	

Test item particulars ..... :	—
Tested lamp ..... :	☒ continuous wave lamps ☐ pulsed lamps
Tested lamp system ..... :	—
Lamp classification group ..... :	☐ exempt ☒ risk 1 ☐ risk 2 ☐ risk 3
Lamp cap ..... :	—
Bulb ..... :	—
Rated of the lamp ..... :	—
Furthermore marking on the lamp ..... :	—
Seasoning of lamps according IEC standard ..... :	—
Used measurement instrument ..... :	Bentham IDR300-PSL
Temperature by measurement ..... :	25 ± 5 °C
Information for safety use ..... :	—

Possible test case verdicts:

- test case does not apply to the test object ..... : N/A
- test object does meet the requirement ..... : P (Pass)
- test object does not meet the requirement ..... : F (Fail)

Testing:

Date of receipt of test item ..... : May 14, 2019

Date (s) of performance of tests ..... : May 14, 2019

General remarks:

Throughout this report a ☒ comma / ☐ point is used as the decimal separator.

The test results presented in this report relate only to the object tested.
This report shall not be reproduced, except in full, without the written approval of the Issuing testing laboratory.
"(See Enclosure #)" refers to additional information appended to the report.
"(See appended table)" refers to a table appended to the report.
Throughout this report a comma is used as the decimal separator.

This document is issued by the Company subject to its General Conditions of Service printed overleaf, available on request or accessible at http://www.sgs.com/en/Terms-and-Conditions.aspx and, for electronic format documents, subject to Terms and Conditions for Electronic Documents at www.sgs.com/terms_e-document.htm.

Attention is drawn to the limitation of liability, indemnification and jurisdiction issues defined therein. Any holder of this document is advised that information contained hereon reflects the Company's findings at the time of its intervention only and within the limits of Client's instructions, if any. The Company's sole responsibility is to its Client and this document does not exonerate parties to a transaction from exercising all their rights and obligations under the transaction documents. This document cannot be reproduced except in full, without prior written approval of the Company. Any unauthorized alteration, forgery or falsification of the content or appearance of this document is unlawful and offenders may be prosecuted to the fullest extent of the law. This test report does not assure KOLAS accreditation.

Unless otherwise stated the results shown in this test report refer only to the sample(s) tested and such sample(s) are retained for 90 days only.

General product information:

- LED used
- Testing were performed with power adapter supplied by client.

IEC / EN 62471			
Clause	Requirement + Test	Result – Remark	Verdict
4	**EXPOSURE LIMITS**		—
4.1	General		P
	The exposure limits in this standard is not less than 0,01 ms and not more than any 8-hour period and should be used as guides in the control of exposure		P
	Detailed spectral data of a light source are generally required only if the luminance of the source exceeds 10^4 cd·m^{-2}		P
4.3	Hazard exposure limits		P
4.3.1	Actinic UV hazard exposure limit for the skin and eye		P
	The exposure limit for effective radiant exposure is 30 J·m^{-2} within any 8-hour period		P
	To protect against injury of the eye or skin from ultraviolet radiation exposure produced by a broad-band source, the effective integrated spectral irradiance, E_S, of the light source shall not exceed the levels defined by:		P
	$E_s \cdot t = \sum_{200}^{400} \sum_{t} E_\lambda(\lambda,t) \cdot S_{UV}(\lambda) \cdot \Delta t \cdot \Delta\lambda \leq 30$ J·m^{-2}		P
	The permissible time for exposure to ultraviolet radiation incident upon the unprotected eye or skin shall be computed by:		P
	$t_{max} = \frac{30}{E_S}$ s		P
4.3.2	Near-UV hazard exposure limit for eye		P
	For the spectral region 315 nm to 400 nm (UV-A) the total radiant exposure to the eye shall not exceed 10000 J·m^{-2} for exposure times less than 1000 s. For exposure times greater than 1000 s (approximately 16 minutes) the UV-A irradiance for the unprotected eye, E_{UVA}, shall not exceed 10 W·m^{-2}.		P
	The permissible time for exposure to ultraviolet radiation incident upon the unprotected eye for time less than 1000 s, shall be computed by:		P
	$t_{max} \leq \frac{10\,000}{E_{UVA}}$ s		P
4.3.3	Retinal blue light hazard exposure limit		P
	To protect against retinal photochemical injury from chronic blue-light exposure, the integrated spectral radiance of the light source weighted against the blue-light hazard function, B(λ), i.e., the blue-light weighted radiance, L_B, shall not exceed the levels defined by:		P

IEC / EN 62471			
Clause	Requirement + Test	Result – Remark	Verdict
	$L_B \cdot t = \sum_{300}^{700} \sum_{t} L_\lambda(\lambda,t) \cdot B(\lambda) \cdot \Delta t \cdot \Delta\lambda \le 10^6$ $J \cdot m^{-2} \cdot sr^{-1}$		P
	$L_B = \sum_{300}^{700} L_\lambda \cdot B(\lambda) \cdot \Delta\lambda \le 100$ $W \cdot m^{-2} \cdot sr^{-1}$		P
4.3.4	Retinal blue light hazard exposure limit - small source		N/A
	Thus the spectral irradiance at the eye E_λ, weighted against the blue-light hazard function B(λ) shall not exceed the levels defined by:		N/A
	$E_B \cdot t = \sum_{300}^{700} \sum_{t} E_\lambda(\lambda,t) \cdot B(\lambda) \cdot \Delta t \cdot \Delta\lambda \le 100$ $J \cdot m^{-2}$		N/A
	$E_B = \sum_{300}^{700} E_\lambda \cdot B(\lambda) \cdot \Delta\lambda \le 1$ $W \cdot m^{-2}$		N/A
4.3.5	Retinal thermal hazard exposure limit		N/A
	To protect against retinal thermal injury, the integrated spectral radiance of the light source, L_λ, weighted by the burn hazard weighting function R(λ) (from Figure 4.2 and Table 4.2), i.e., the burn hazard weighted radiance, shall not exceed the levels defined by:		N/A
	$L_R = \sum_{380}^{1400} L_\lambda \cdot R(\lambda) \cdot \Delta\lambda \le \frac{50\,000}{\alpha \cdot t^{0,25}}$ $W \cdot m^{-2} \cdot sr^{-1}$		N/A
4.3.6	Retinal thermal hazard exposure limit – weak visual stimulus		P
	For an infrared heat lamp or any near-infrared source where a weak visual stimulus is inadequate to activate the aversion response, the near infrared (780 nm to 1400 nm) radiance, L_{IR}, as viewed by the eye for exposure times greater than 10 s shall be limited to:		P
	$L_{IR} = \sum_{780}^{1400} L_\lambda \cdot R(\lambda) \cdot \Delta\lambda \le \frac{6\,000}{\alpha}$ $W \cdot m^{-2} \cdot sr^{-1}$		P
4.3.7	Infrared radiation hazard exposure limits for the eye		N/A
	The avoid thermal injury of the cornea and possible delayed effects upon the lens of the eye (cataractogenesis), ocular exposure to infrared radiation, E_{IR}, over the wavelength range 780 nm to 3000 nm, for times less than 1000 s, shall not exceed:		N/A
	$E_{IR} = \sum_{780}^{3\,000} E_\lambda \cdot \Delta\lambda \le 18\,000 \cdot t^{-0,75}$ $W \cdot m^{-2}$		N/A
	For times greater than 1000 s the limit becomes:		N/A

IEC / EN 62471			
Clause	Requirement + Test	Result – Remark	Verdict
	$E_{IR} = \sum_{780}^{3\,000} E_\lambda \cdot \Delta\lambda \leq 100 \quad W \cdot m^{-2}$		N/A
4.3.8	Thermal hazard exposure limit for the skin		N/A
	Visible and infrared radiant exposure (380 nm to 3000 nm) of the skin shall be limited to:		N/A
	$E_H \cdot t = \sum_{380}^{3\,000} \sum_{t} E_\lambda(\lambda, t) \cdot \Delta t \cdot \Delta\lambda \leq 20\,000 \cdot t^{0,25} \quad J \cdot m^{-2}$		N/A
5	**MEASUREMENT OF LAMPS AND LAMP SYSTEMS**		—
5.1	Measurement conditions		P
	Measurement conditions shall be reported as part of the evaluation against the exposure limits and the assignment of risk classification.		P
5.1.1	Lamp ageing (seasoning)		N/A
	Seasoning of lamps shall be done as stated in the appropriate IEC lamp standard.		N/A
5.1.2	Test environment		P
	For specific test conditions, see the appropriate IEC lamp standard or in absence of such standards, the appropriate national standards or manufacturer's recommendations.		P
5.1.3	Extraneous radiation		P
	Careful checks should be made to ensure that extraneous sources of radiation and reflections do not add significantly to the measurement results.		P
5.1.4	Lamp operation		P
	Operation of the test lamp shall be provided in accordance with:		P
	– the appropriate IEC lamp standard, or		N/A
	– the manufacturer' s recommendation		P
5.1.5	Lamp system operation		N/A
	The power source for operation of the test lamp shall be provided in accordance with:		N/A
	– the appropriate IEC standard, or		N/A
	– the manufacturer' s recommendation		N/A
5.2	Measurement procedure		P
5.2.1	Irradiance measurements		P
	Minimum aperture diameter 7mm.		P

IEC / EN 62471			
Clause	Requirement + Test	Result – Remark	Verdict
	Maximum aperture diameter 50 mm.		P
	The measurement shall be made in that position of the beam giving the maximum reading.		P
	The measurement instrument is adequate calibrated.		P
5.2.2	Radiance measurements		P
5.2.2.1	Standard method		P
	The measurements made with an optical system.		P
	The instrument shall be calibrated to read in absolute radiant power per unit receiving area and per unit solid angle to acceptance averaged over the field of view of the instrument.		P
5.2.2.2	Alternative method		N/A
	Alternatively to an imaging radiance set-up, an irradiance measurement set-up with a circular field stop placed at the source can be used to perform radiance measurements.		N/A
5.2.3	Measurement of source size		P
	The determination of α, the angle subtended by a source, requires the determination of the 50% emission points of the source.		P
5.2.4	Pulse width measurement for pulsed sources		N/A
	The determination of Δt, the nominal pulse duration of a source, requires the determination of the time during which the emission is > 50% of its peak value.		N/A
5.3	Analysis methods		P
5.3.1	Weighting curve interpolations		P
	To standardize interpolated values, use linear interpolation on the log of given values to obtain intermediate points at the wavelength intervals desired.		P
5.3.2	Calculations		P
	The calculation of source hazard values shall be performed by weighting the spectral scan by the appropriate function and calculating the total weighted energy.		P
5.3.3	Measurement uncertainty		P
	The quality of all measurement results must be quantified by an analysis of the uncertainty.		P

6	**LAMP CLASSIFICATION**	—

IEC / EN 62471			
Clause	Requirement + Test	Result – Remark	Verdict
	For the purposes of this standard it was decided that the values shall be reported as follows:		P
	– for lamps intended for general lighting service, the hazard values shall be reported as either irradiance or radiance values at a distance which produces an illuminance of 500 lux, but not at a distance less than 200 mm		N/A
	– for all other light sources, including pulsed lamp sources, the hazard values shall be reported at a distance of 200 mm		P
6.1	Continuous wave lamps		P
6.1.1	Exempt Group		N/A
	In the exempt group are lamps, which do not pose any photobiological hazard. The requirement is met by any lamp that does not pose:		N/A
	– an actinic ultraviolet hazard (E_S) within 8-hours exposure (30000 s), nor		N/A
	– a near-UV hazard (E_{UVA}) within 1000 s, (about 16 min), nor		N/A
	– a retinal blue-light hazard (L_B) within 10000 s (about 2,8 h), nor		N/A
	– a retinal thermal hazard (L_R) within 10 s, nor		N/A
	– an infrared radiation hazard for the eye (E_{IR}) within 1000 s		N/A
6.1.2	Risk Group 1 (Low-Risk)		P
	In this group are lamps, which exceeds the limits for the exempt group but that does not pose:		P
	– an actinic ultraviolet hazard (E_S) within 10000 s, nor		P
	– a near ultraviolet hazard (E_{UVA}) within 300 s, nor		P
	– a retinal blue-light hazard (L_B) within 100 s, nor		P
	– a retinal thermal hazard (L_R) within 10 s, nor		P
	– an infrared radiation hazard for the eye (E_{IR}) within 100 s		P
	Lamps that emit infrared radiation without a strong visual stimulus and do not pose a near-infrared retinal hazard (L_{IR}), within 100 s are in Risk Group 1.		P
6.1.3	Risk Group 2 (Moderate-Risk)		N/A
	This requirement is met by any lamp that exceeds the limits for Risk Group 1, but that does not pose:		N/A
	– an actinic ultraviolet hazard (E_S) within 1000 s exposure, nor		N/A

IEC / EN 62471			
Clause	Requirement + Test	Result – Remark	Verdict
	– a near ultraviolet hazard (E_{UVA}) within 100 s, nor		N/A
	– a retinal blue-light hazard (L_B) within 0,25 s (aversion response), nor		N/A
	– a retinal thermal hazard (L_R) within 0,25 s (aversion response), nor		N/A
	– an infrared radiation hazard for the eye (E_{IR}) within 10 s		N/A
	Lamps that emit infrared radiation without a strong visual stimulus and do not pose a near-infrared retinal hazard (L_{IR}), within 10 s are in Risk Group 2.		N/A
6.1.4	Risk Group 3 (High-Risk)		N/A
	Lamps which exceed the limits for Risk Group 2 are in Group 3.		N/A
6.2	Pulsed lamps		N/A

EN 62471			
Clause	Requirement + Test	Result - Remark	Verdict
	CENELEC COMMON MODIFICATIONS (EN)		—
4	**EXPOSURE LIMITS**		—
	Contents of the whole Clause 4 of IEC 62471:2006 moved into a new informative Annex ZB		—
	Clause 4 replaced by the following:		N/A
	Limits of the Artificial Optical Radiation Directive (2006/25/EC) have been applied instead of those fixed in IEC 62471:2006		N/A
4.1	General		N/A
	First paragraph deleted		—

IEC 62471			
Clause	Requirement + Test	Result – Remark	Verdict

Table 6.1	Emission limits for risk groups of continuous wave lamps								P
Risk	Action spectrum	Symbol	Units	Emission Measurement					
				Exempt		Low risk		Mod risk	
				Limit	Result	Limit	Result	Limit	Result
Actinic UV	$S_{UV}(\lambda)$	E_s	$W \cdot m^{-2}$	0,001	7,72E-05	0,003	—	0,03	—
Near UV	—	E_{UVA}	$W \cdot m^{-2}$	10	7,07E-05	33	—	100	—
Blue light	$B(\lambda)$	L_B	$W \cdot m^{-2} \cdot sr^{-1}$	100	0,0027	10000	—	4000000	—
Blue light, small source	$B(\lambda)$	E_B	$W \cdot m^{-2}$	1,0*	0E+00	1,0	0E+00	400	—
Retinal thermal	$R(\lambda)$	L_R	$W \cdot m^{-2} \cdot sr^{-1}$	28000/α	—	28000/α	—	71000/α	—
Retinal thermal, weak visual stimulus**	$R(\lambda)$	L_{IR}	$W \cdot m^{-2} \cdot sr^{-1}$	6000/α	1,05E+07	6000/α	1,01E+04	6000/α	1,01E+04
IR radiation, eye	—	E_{IR}	$W \cdot m^{-2}$	100	—	570	—	3200	—

* Small source defined as one with α < 0,011 radian. Averaging field of view at 10000 s is 0,1 radian.
** Involves evaluation of non-GLS source

EN 62471			
Clause	Requirement + Test	Result – Remark	Verdict

Table 6.1	Emission limits for risk groups of continuous wave lamps (based on EU Directive 2006/25/EC)									N/A
Risk	Action spectrum	Symbol	Units	Emission Measurement						
				Exempt		Low risk		Mod risk		
				Limit	Result	Limit	Result	Limit	Result	
Actinic UV	$S_{UV}(\lambda)$	E_s	$W \cdot m^{-2}$	0,001	—	—	—	—	—	
Near UV	—	E_{UVA}	$W \cdot m^{-2}$	0,33	—	—	—	—	—	
Blue light	$B(\lambda)$	L_B	$W \cdot m^{-2} \cdot sr^{-1}$	100	—	10000	—	4000000	—	
Blue light, small source	$B(\lambda)$	E_B	$W \cdot m^{-2}$	0,01*	—	1,0	—	400	—	
Retinal thermal	$R(\lambda)$	L_R	$W \cdot m^{-2} \cdot sr^{-1}$	28000/α	—	28000/α	—	71000/α	—	
Retinal thermal, weak visual stimulus**	$R(\lambda)$	L_{IR}	$W \cdot m^{-2} \cdot sr^{-1}$	545000 0,0017≤ α ≤ 0,011	—					
				6000/α 0,011≤ α ≤ 0,1	—					
IR radiation, eye	—	E_{IR}	$W \cdot m^{-2}$	100	—	570	—	3200	—	

* Small source defined as one with α < 0,011 radian. Averaging field of view at 10000 s is 0,1 radian.
** Involves evaluation of non-GLS source

Photo documentation

Front view

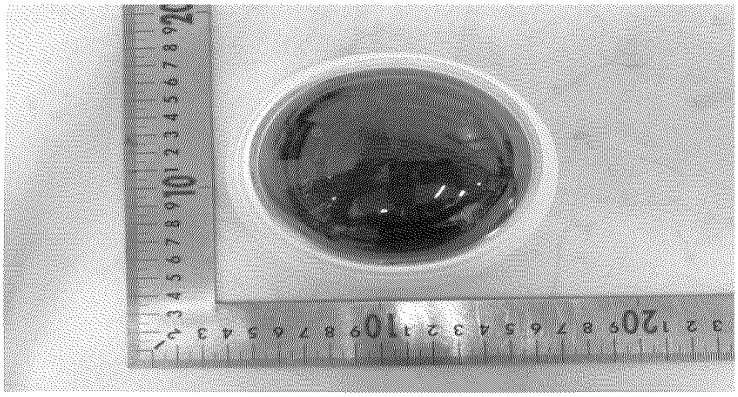

Furthermore remarks

* Resulting IEC 62471 Classification and Labelling

Hazard	Risk Group
Actinic UV	Exempt
Near UV	Exempt
Blue Light	Exempt
Retinal Thermal Weak Visual	Group 1

Risk Group 1
WARNING IR emitted from this product. Do not stare at operating lamp
Product tested against IEC62471

- END OF TEST REPORT -

SGS

TEST REPORT
IEC 62471 and/or EN 62471
Photobiological safety of lamps and lamp systems

Report Reference No. ..... :	F690501/RF-SAF011104
Order No.	G-44-2019-01531
Tested by (name + signature) ..... :	Ethan Kim .....
Approved by (name + signature) ..... :	Doonam Choi .....
Date of issue ..... :	May 16, 2019
Total number of pages ..... :	14 pages
Testing Laboratory ..... :	SGS Korea Co., Ltd. Gunpo Laboratory
Address ..... :	14, LS-ro 182beon-gil, Gunpo-si, Gyeonggi-do, 15807, Republic of Korea
Applicant's name ..... :	Hanwha Techwin Co Ltd
Address ..... :	6 Pangyo-ro 319Beon-gil, Bundang-gu, Seongnam-si, Gyeonggi-do, 13488 KOREA
Test specification:	
Standard ..... :	☒ IEC 62471: 2006 (First Edition) ☐ EN 62471: 2008
Test procedure ..... :	Test report
Non-standard test method ..... :	N/A
Test Report Form No. ..... :	IECEN62471A
TRF Originator ..... :	VDE Testing and Certification Institute
Master TRF ..... :	Dated 2009-05
TRF Modified by ..... :	SGS Korea Co., Ltd. Gunpo Laboratory
Modified TRF Form No. ..... :	TRF No. SAF5102-IEC62471A(2015/11/11)(0)
Test item description ..... :	NETWORK CAMERA
Trade Mark ..... :	-
Manufacturer ..... :	Same as applicant
Model/Type reference ..... :	QND-6022R
Ratings ..... :	12 Vd.c.; 0,54 A or PoE 48 V d.c.; 0,16 A

Summary of testing: - The submitted samples were found to be in compliance with IEC 62471	
Tests performed (name of test and test clause): 4.3.1 Actinic UV hazard exposure limit for the skin and eye 4.3.2 Near-UV hazard exposure limit for eye 4.3.3 Retinal blue light hazard exposure limit 4.3.5 Retinal thermal hazard exposure limit	**Testing location:** Refer to page 1.
Summary of compliance with National Differences: None	
Copy of marking plate: -	

Test item particulars ..... :	—
Tested lamp ..... :	☒ continuous wave lamps ☐ pulsed lamps
Tested lamp system ..... :	—
Lamp classification group ..... :	☒ exempt ☐ risk 1 ☐ risk 2 ☐ risk 3
Lamp cap ..... :	—
Bulb ..... :	—
Rated of the lamp ..... :	—
Furthermore marking on the lamp ..... :	—
Seasoning of lamps according IEC standard ..... :	—
Used measurement instrument ..... :	Bentham IDR300-PSL
Temperature by measurement ..... :	25 ± 5 °C
Information for safety use ..... :	—

Possible test case verdicts:

- test case does not apply to the test object ..... : N/A
- test object does meet the requirement ..... : P (Pass)
- test object does not meet the requirement ..... : F (Fail)

Testing:

Date of receipt of test item ..... : May 14, 2019

Date (s) of performance of tests ..... : May 14, 2019

General remarks:

Throughout this report a ☒ comma / ☐ point is used as the decimal separator.

The test results presented in this report relate only to the object tested.
This report shall not be reproduced, except in full, without the written approval of the Issuing testing laboratory.
"(See Enclosure #)" refers to additional information appended to the report.
"(See appended table)" refers to a table appended to the report.
Throughout this report a comma is used as the decimal separator.

This document is issued by the Company subject to its General Conditions of Service printed overleaf, available on request or accessible at http://www.sgs.com/en/Terms-and-Conditions.aspx and, for electronic format documents, subject to Terms and Conditions for Electronic Documents at www.sgs.com/terms_e-document.htm.

Attention is drawn to the limitation of liability, indemnification and jurisdiction issues defined therein. Any holder of this document is advised that information contained hereon reflects the Company's findings at the time of its intervention only and within the limits of Client's instructions, if any. The Company's sole responsibility is to its Client and this document does not exonerate parties to a transaction from exercising all their rights and obligations under the transaction documents. This document cannot be reproduced except in full, without prior written approval of the Company. Any unauthorized alteration, forgery or falsification of the content or appearance of this document is unlawful and offenders may be prosecuted to the fullest extent of the law. This test report does not assure KOLAS accreditation.

Unless otherwise stated the results shown in this test report refer only to the sample(s) tested and such sample(s) are retained for 90 days only.

General product information:

- LED used
- Testing were performed with power adapter supplied by client.

IEC / EN 62471			
Clause	Requirement + Test	Result – Remark	Verdict
4	**EXPOSURE LIMITS**		—
4.1	General		P
	The exposure limits in this standard is not less than 0,01 ms and not more than any 8-hour period and should be used as guides in the control of exposure		P
	Detailed spectral data of a light source are generally required only if the luminance of the source exceeds 10^4 cd·m^{-2}		P
4.3	Hazard exposure limits		P
4.3.1	Actinic UV hazard exposure limit for the skin and eye		P
	The exposure limit for effective radiant exposure is 30 J·m^{-2} within any 8-hour period		P
	To protect against injury of the eye or skin from ultraviolet radiation exposure produced by a broad-band source, the effective integrated spectral irradiance, E_S, of the light source shall not exceed the levels defined by:		P
	$E_s \cdot t = \sum_{200}^{400} \sum_{t} E_\lambda(\lambda,t) \cdot S_{UV}(\lambda) \cdot \Delta t \cdot \Delta\lambda \leq 30$ J·m^{-2}		P
	The permissible time for exposure to ultraviolet radiation incident upon the unprotected eye or skin shall be computed by:		P
	$t_{max} = \frac{30}{E_S}$ s		P
4.3.2	Near-UV hazard exposure limit for eye		P
	For the spectral region 315 nm to 400 nm (UV-A) the total radiant exposure to the eye shall not exceed 10000 J·m^{-2} for exposure times less than 1000 s. For exposure times greater than 1000 s (approximately 16 minutes) the UV-A irradiance for the unprotected eye, E_{UVA}, shall not exceed 10 W·m^{-2}.		P
	The permissible time for exposure to ultraviolet radiation incident upon the unprotected eye for time less than 1000 s, shall be computed by:		P
	$t_{max} \leq \frac{10\,000}{E_{UVA}}$ s		P
4.3.3	Retinal blue light hazard exposure limit		P
	To protect against retinal photochemical injury from chronic blue-light exposure, the integrated spectral radiance of the light source weighted against the blue-light hazard function, B(λ), i.e., the blue-light weighted radiance, L_B, shall not exceed the levels defined by:		P

IEC / EN 62471			
Clause	Requirement + Test	Result – Remark	Verdict
	$L_B \cdot t = \sum_{300}^{700} \sum_{t} L_\lambda(\lambda,t) \cdot B(\lambda) \cdot \Delta t \cdot \Delta\lambda \le 10^6$ $J \cdot m^{-2} \cdot sr^{-1}$		P
	$L_B = \sum_{300}^{700} L_\lambda \cdot B(\lambda) \cdot \Delta\lambda \le 100$ $W \cdot m^{-2} \cdot sr^{-1}$		P
4.3.4	Retinal blue light hazard exposure limit - small source		N/A
	Thus the spectral irradiance at the eye E_λ, weighted against the blue-light hazard function B(λ) shall not exceed the levels defined by:		N/A
	$E_B \cdot t = \sum_{300}^{700} \sum_{t} E_\lambda(\lambda,t) \cdot B(\lambda) \cdot \Delta t \cdot \Delta\lambda \le 100$ $J \cdot m^{-2}$		N/A
	$E_B = \sum_{300}^{700} E_\lambda \cdot B(\lambda) \cdot \Delta\lambda \le 1$ $W \cdot m^{-2}$		N/A
4.3.5	Retinal thermal hazard exposure limit		N/A
	To protect against retinal thermal injury, the integrated spectral radiance of the light source, L_λ, weighted by the burn hazard weighting function R(λ) (from Figure 4.2 and Table 4.2), i.e., the burn hazard weighted radiance, shall not exceed the levels defined by:		N/A
	$L_R = \sum_{380}^{1400} L_\lambda \cdot R(\lambda) \cdot \Delta\lambda \le \frac{50\,000}{\alpha \cdot t^{0,25}}$ $W \cdot m^{-2} \cdot sr^{-1}$		N/A
4.3.6	Retinal thermal hazard exposure limit – weak visual stimulus		P
	For an infrared heat lamp or any near-infrared source where a weak visual stimulus is inadequate to activate the aversion response, the near infrared (780 nm to 1400 nm) radiance, L_{IR}, as viewed by the eye for exposure times greater than 10 s shall be limited to:		P
	$L_{IR} = \sum_{780}^{1400} L_\lambda \cdot R(\lambda) \cdot \Delta\lambda \le \frac{6\,000}{\alpha}$ $W \cdot m^{-2} \cdot sr^{-1}$		P
4.3.7	Infrared radiation hazard exposure limits for the eye		N/A
	The avoid thermal injury of the cornea and possible delayed effects upon the lens of the eye (cataractogenesis), ocular exposure to infrared radiation, E_{IR}, over the wavelength range 780 nm to 3000 nm, for times less than 1000 s, shall not exceed:		N/A
	$E_{IR} = \sum_{780}^{3\,000} E_\lambda \cdot \Delta\lambda \le 18\,000 \cdot t^{-0,75}$ $W \cdot m^{-2}$		N/A
	For times greater than 1000 s the limit becomes:		N/A

IEC / EN 62471			
Clause	Requirement + Test	Result – Remark	Verdict
	$E_{IR} = \sum_{780}^{3\,000} E_\lambda \cdot \Delta\lambda \leq 100 \quad W \cdot m^{-2}$		N/A
4.3.8	Thermal hazard exposure limit for the skin		N/A
	Visible and infrared radiant exposure (380 nm to 3000 nm) of the skin shall be limited to:		N/A
	$E_H \cdot t = \sum_{380}^{3\,000} \sum_{t} E_\lambda(\lambda,t) \cdot \Delta t \cdot \Delta\lambda \leq 20\,000 \cdot t^{0,25} \quad J \cdot m^{-2}$		N/A
5	**MEASUREMENT OF LAMPS AND LAMP SYSTEMS**		—
5.1	Measurement conditions		P
	Measurement conditions shall be reported as part of the evaluation against the exposure limits and the assignment of risk classification.		P
5.1.1	Lamp ageing (seasoning)		N/A
	Seasoning of lamps shall be done as stated in the appropriate IEC lamp standard.		N/A
5.1.2	Test environment		P
	For specific test conditions, see the appropriate IEC lamp standard or in absence of such standards, the appropriate national standards or manufacturer's recommendations.		P
5.1.3	Extraneous radiation		P
	Careful checks should be made to ensure that extraneous sources of radiation and reflections do not add significantly to the measurement results.		P
5.1.4	Lamp operation		P
	Operation of the test lamp shall be provided in accordance with:		P
	– the appropriate IEC lamp standard, or		N/A
	– the manufacturer' s recommendation		P
5.1.5	Lamp system operation		N/A
	The power source for operation of the test lamp shall be provided in accordance with:		N/A
	– the appropriate IEC standard, or		N/A
	– the manufacturer' s recommendation		N/A
5.2	Measurement procedure		P
5.2.1	Irradiance measurements		P
	Minimum aperture diameter 7mm.		P

IEC / EN 62471			
Clause	Requirement + Test	Result – Remark	Verdict
	Maximum aperture diameter 50 mm.		P
	The measurement shall be made in that position of the beam giving the maximum reading.		P
	The measurement instrument is adequate calibrated.		P
5.2.2	Radiance measurements		P
5.2.2.1	Standard method		P
	The measurements made with an optical system.		P
	The instrument shall be calibrated to read in absolute radiant power per unit receiving area and per unit solid angle to acceptance averaged over the field of view of the instrument.		P
5.2.2.2	Alternative method		N/A
	Alternatively to an imaging radiance set-up, an irradiance measurement set-up with a circular field stop placed at the source can be used to perform radiance measurements.		N/A
5.2.3	Measurement of source size		P
	The determination of α, the angle subtended by a source, requires the determination of the 50% emission points of the source.		P
5.2.4	Pulse width measurement for pulsed sources		N/A
	The determination of Δt, the nominal pulse duration of a source, requires the determination of the time during which the emission is > 50% of its peak value.		N/A
5.3	Analysis methods		P
5.3.1	Weighting curve interpolations		P
	To standardize interpolated values, use linear interpolation on the log of given values to obtain intermediate points at the wavelength intervals desired.		P
5.3.2	Calculations		P
	The calculation of source hazard values shall be performed by weighting the spectral scan by the appropriate function and calculating the total weighted energy.		P
5.3.3	Measurement uncertainty		P
	The quality of all measurement results must be quantified by an analysis of the uncertainty.		P

6	**LAMP CLASSIFICATION**	—

IEC / EN 62471			
Clause	Requirement + Test	Result – Remark	Verdict
	For the purposes of this standard it was decided that the values shall be reported as follows:		P
	– for lamps intended for general lighting service, the hazard values shall be reported as either irradiance or radiance values at a distance which produces an illuminance of 500 lux, but not at a distance less than 200 mm		N/A
	– for all other light sources, including pulsed lamp sources, the hazard values shall be reported at a distance of 200 mm		P
6.1	Continuous wave lamps		P
6.1.1	Exempt Group		P
	In the exempt group are lamps, which do not pose any photobiological hazard. The requirement is met by any lamp that does not pose:		P
	– an actinic ultraviolet hazard (E_S) within 8-hours exposure (30000 s), nor		P
	– a near-UV hazard (E_{UVA}) within 1000 s, (about 16 min), nor		P
	– a retinal blue-light hazard (L_B) within 10000 s (about 2,8 h), nor		P
	– a retinal thermal hazard (L_R) within 10 s, nor		P
	– an infrared radiation hazard for the eye (E_{IR}) within 1000 s		P
6.1.2	Risk Group 1 (Low-Risk)		N/A
	In this group are lamps, which exceeds the limits for the exempt group but that does not pose:		N/A
	– an actinic ultraviolet hazard (E_S) within 10000 s, nor		N/A
	– a near ultraviolet hazard (E_{UVA}) within 300 s, nor		N/A
	– a retinal blue-light hazard (L_B) within 100 s, nor		N/A
	– a retinal thermal hazard (L_R) within 10 s, nor		N/A
	– an infrared radiation hazard for the eye (E_{IR}) within 100 s		N/A
	Lamps that emit infrared radiation without a strong visual stimulus and do not pose a near-infrared retinal hazard (L_{IR}), within 100 s are in Risk Group 1.		N/A
6.1.3	Risk Group 2 (Moderate-Risk)		N/A
	This requirement is met by any lamp that exceeds the limits for Risk Group 1, but that does not pose:		N/A
	– an actinic ultraviolet hazard (E_S) within 1000 s exposure, nor		N/A

IEC / EN 62471			
Clause	Requirement + Test	Result – Remark	Verdict
	– a near ultraviolet hazard (E_{UVA}) within 100 s, nor		N/A
	– a retinal blue-light hazard (L_B) within 0,25 s (aversion response), nor		N/A
	– a retinal thermal hazard (L_R) within 0,25 s (aversion response), nor		N/A
	– an infrared radiation hazard for the eye (E_{IR}) within 10 s		N/A
	Lamps that emit infrared radiation without a strong visual stimulus and do not pose a near-infrared retinal hazard (L_{IR}), within 10 s are in Risk Group 2.		N/A
6.1.4	Risk Group 3 (High-Risk)		N/A
	Lamps which exceed the limits for Risk Group 2 are in Group 3.		N/A
6.2	Pulsed lamps		N/A

EN 62471			
Clause	Requirement + Test	Result - Remark	Verdict
	CENELEC COMMON MODIFICATIONS (EN)		—
4	**EXPOSURE LIMITS**		—
	Contents of the whole Clause 4 of IEC 62471:2006 moved into a new informative Annex ZB		—
	Clause 4 replaced by the following:		N/A
	Limits of the Artificial Optical Radiation Directive (2006/25/EC) have been applied instead of those fixed in IEC 62471:2006		N/A
4.1	General		N/A
	First paragraph deleted		—

IEC 62471			
Clause	Requirement + Test	Result – Remark	Verdict

Table 6.1	Emission limits for risk groups of continuous wave lamps								P
Risk	Action spectrum	Symbol	Units	Emission Measurement					
				Exempt		Low risk		Mod risk	
				Limit	Result	Limit	Result	Limit	Result
Actinic UV	$S_{UV}(\lambda)$	E_s	$W \cdot m^{-2}$	0,001	5,91E-05	0,003	—	0,03	—
Near UV	—	E_{UVA}	$W \cdot m^{-2}$	10	9,07E-05	33	—	100	—
Blue light	$B(\lambda)$	L_B	$W \cdot m^{-2} \cdot sr^{-1}$	100	0,002	10000	—	4000000	—
Blue light, small source	$B(\lambda)$	E_B	$W \cdot m^{-2}$	1,0*	0E+00	1,0	0E+00	400	—
Retinal thermal	$R(\lambda)$	L_R	$W \cdot m^{-2} \cdot sr^{-1}$	28000/α	2,27E+04	28000/α	2,27E+04	71000/α	—
Retinal thermal, weak visual stimulus**	$R(\lambda)$	L_{IR}	$W \cdot m^{-2} \cdot sr^{-1}$	6000/α	—	6000/α	—	6000/α	—
IR radiation, eye	—	E_{IR}	$W \cdot m^{-2}$	100	—	570	—	3200	—

* Small source defined as one with α < 0,011 radian. Averaging field of view at 10000 s is 0,1 radian.
** Involves evaluation of non-GLS source

EN 62471			
Clause	Requirement + Test	Result – Remark	Verdict

Table 6.1	Emission limits for risk groups of continuous wave lamps (based on EU Directive 2006/25/EC)									N/A
Risk	Action spectrum	Symbol	Units	Emission Measurement						
				Exempt		Low risk		Mod risk		
				Limit	Result	Limit	Result	Limit	Result	
Actinic UV	$S_{UV}(\lambda)$	E_s	$W \cdot m^{-2}$	0,001	—	—	—	—	—	
Near UV	—	E_{UVA}	$W \cdot m^{-2}$	0,33	—	—	—	—	—	
Blue light	$B(\lambda)$	L_B	$W \cdot m^{-2} \cdot sr^{-1}$	100	—	10000	—	4000000	—	
Blue light, small source	$B(\lambda)$	E_B	$W \cdot m^{-2}$	0,01*	—	1,0	—	400	—	
Retinal thermal	$R(\lambda)$	L_R	$W \cdot m^{-2} \cdot sr^{-1}$	28000/α	—	28000/α	—	71000/α	—	
Retinal thermal, weak visual stimulus**	$R(\lambda)$	L_{IR}	$W \cdot m^{-2} \cdot sr^{-1}$	545000 0,0017≤ α ≤ 0,011	—					
				6000/α 0,011≤ α ≤ 0,1	—					
IR radiation, eye	—	E_{IR}	$W \cdot m^{-2}$	100	—	570	—	3200	—	

* Small source defined as one with α < 0,011 radian. Averaging field of view at 10000 s is 0,1 radian.
** Involves evaluation of non-GLS source

Photo documentation

Front view

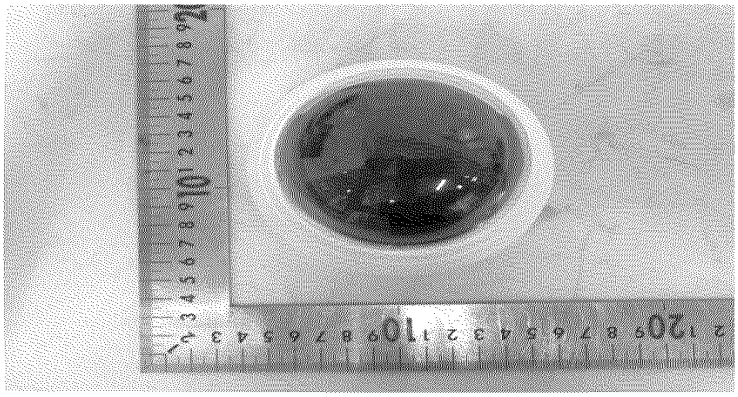

Furthermore remarks

* Resulting IEC 62471 Classification and Labelling

Hazard	Risk Group
Actinic UV	Exempt
Near UV	Exempt
Blue Light	Exempt
Retinal Thermal	Exempt

Exempt
No Labelling Required
Product tested against IEC62471

- END OF TEST REPORT -

Photographs-01 Page-1

Photographs-02 Page-1

Photographs-03 Page-1

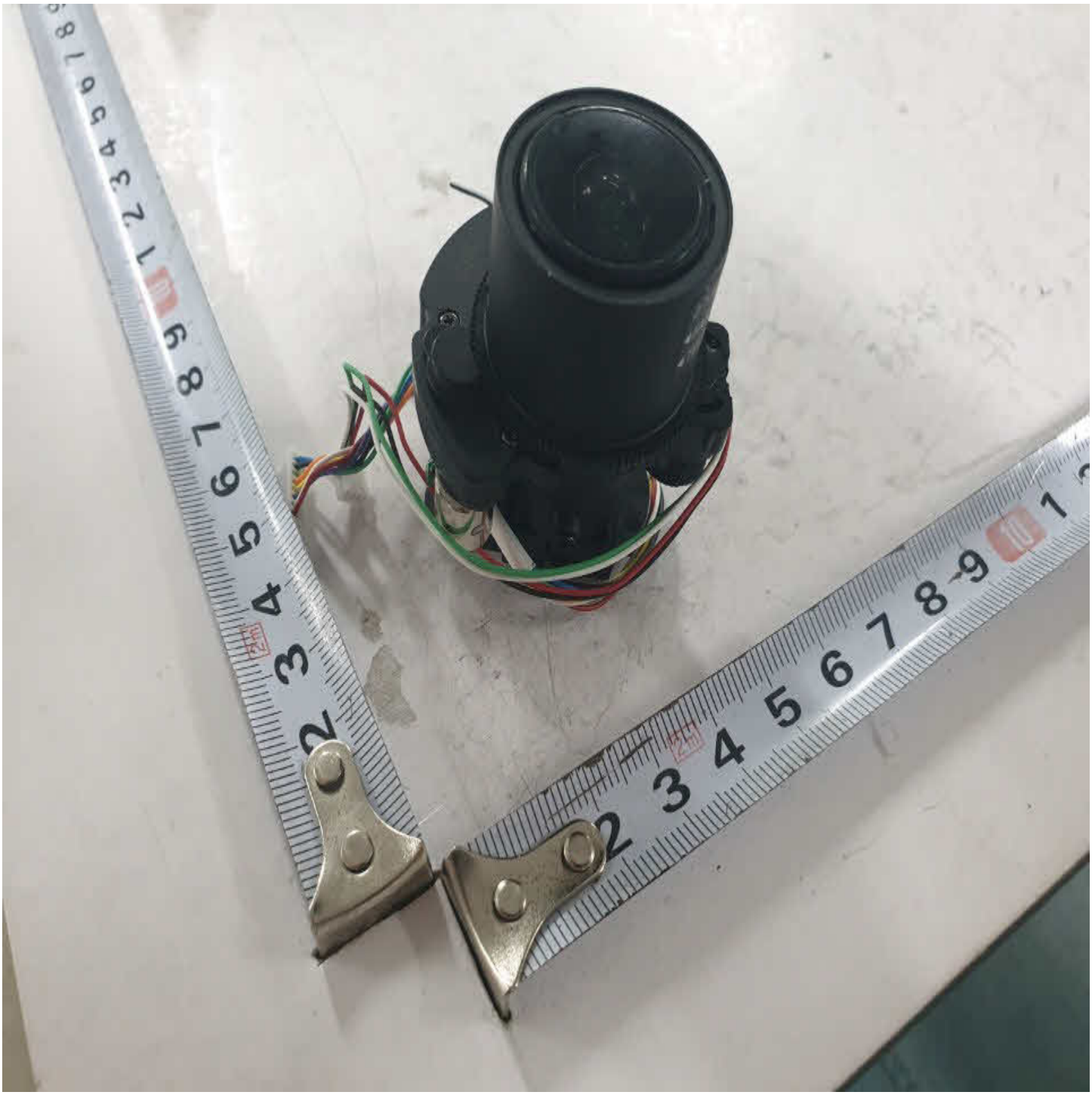

Photographs-04 Page-1

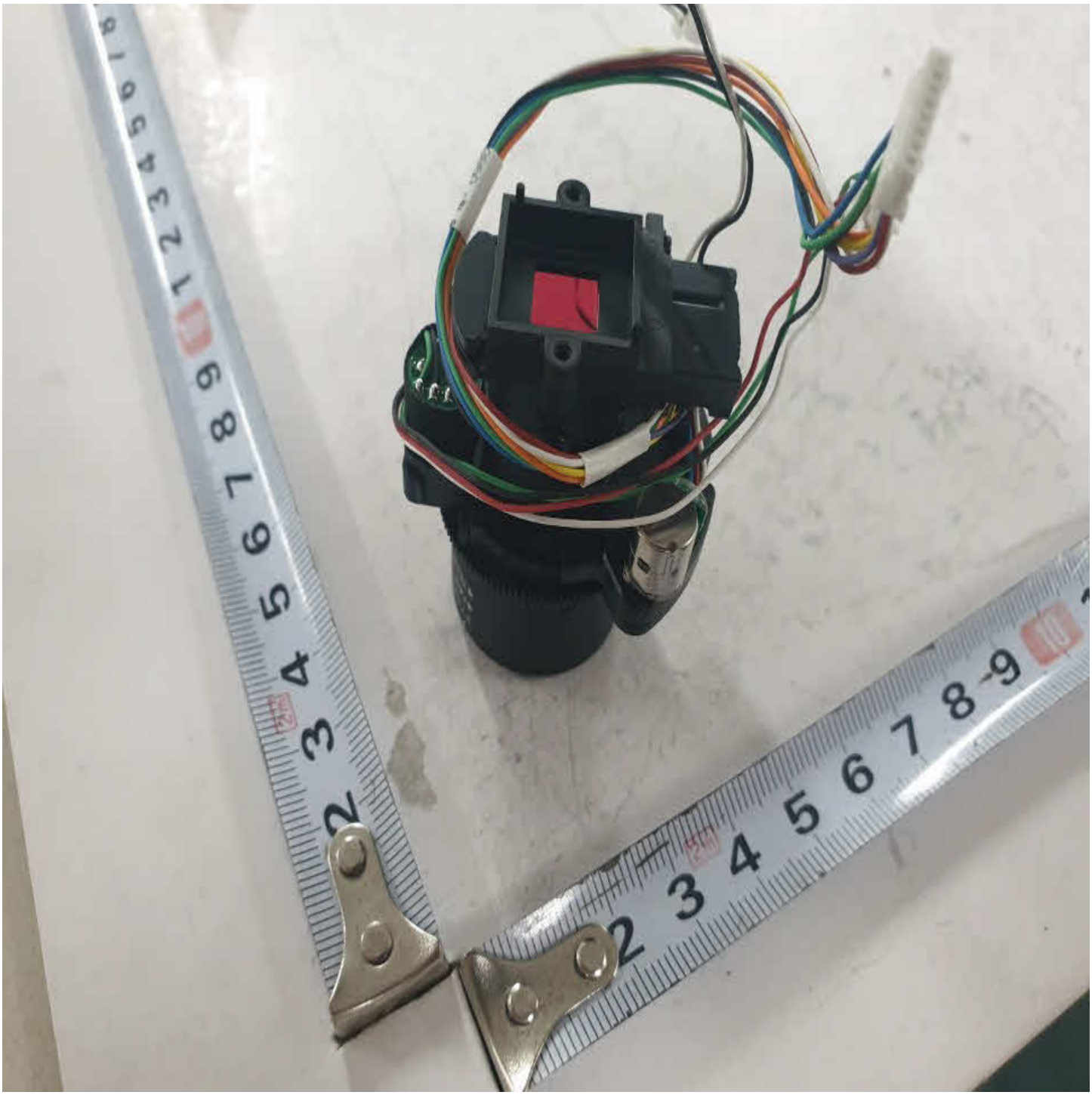

Photographs-05 Page-1

Photographs-06 Page-1

Test Record No. 1

1. Test result relate only to the items tested.

2. The manufacturer submitted representative production samples of NETWORK CAMERA, QND-6083, QND-6032R.

3. Only the test listed were considered necessary.

The following tests were conducted:

Tests performed (name of test and test clause):	**Testing location:**
Input: Single-Phase (1.6.2)	
SELV Reliability Test Including Hazardous Voltage Measurements (2.2.2, 2.2.3, 2.2.4, Part 22 6.1)	
Determination of Working Voltage; Working Voltage Measurement (2.10.2)	
Loading - Wall and Ceiling Mounted Equipment (4.2.10)	
Battery (4.3.8)	
Heating (4.5.1, 1.4.12, 1.4.13)	
Component Failure (5.3.1, 5.3.4, 5.3.7)	
The following tests were waived:	**Rationale for Waiving**
Limited Power Source Measurements (2.5)	Supplied by LPS

Test results are valid only for the tested equipment. These tests are considered representative of the products covered by this Test Report. The test methods and results of the above tests have been reviewed and found to be in accordance with the requirements in the Standard(s) referenced at the beginning of this Test Report.

The following supplements are provided as part of this Test Record. NOTE: These supplements are only available to the Applicant via the myUL™ Client Portal.

Type	Supplement Id	Description
Datasheet	02-01	Datasheet

Test Record No. 2

No test was considered necessary in order to below under engineering consideration.
- Change Transparent Dome Cover Enclosure (Plastic) type S-2000V+(f1) made by Mitsubishi Engineering Plastic Corp

The following tests were conducted:

Tests performed (name of test and test clause): None	**Testing location: None**
The following tests were waived: None	**Rationale for Waiving**

Test results are valid only for the tested equipment. These tests are considered representative of the products covered by this Test Report. The test methods and results of the above tests have been reviewed and found to be in accordance with the requirements in the Standard(s) referenced at the beginning of this Test Report.

The following supplements are provided as part of this Test Record. NOTE: These supplements are only available to the Applicant via the myUL™ Client Portal.

Type	Supplement Id	Description

Test Record No. 3

No test was considered necessary in order to below revision.
- Add model name; QND-6012R1, QND-6022R1, QND-6032R1, QND-6072R1, QND-6082R1.

The following tests were conducted:

Tests performed (name of test and test clause): None	**Testing location: None**
The following tests were waived: None	**Rationale for Waiving**

Test results are valid only for the tested equipment. These tests are considered representative of the products covered by this Test Report. The test methods and results of the above tests have been reviewed and found to be in accordance with the requirements in the Standard(s) referenced at the beginning of this Test Report.

The following supplements are provided as part of this Test Record. NOTE: These supplements are only available to the Applicant via the myUL™ Client Portal.

Type	Supplement Id	Description