Hanwha Vision

ネットワークカメラ
ユーザーマニュアル

QND-7010R/7020R/7030R,
QNO-7010R/7020R/7030R,
QNV-7010R/7020R/7030R

CE

ネットワークカメラ
ユーザーマニュアル

Copyright

©2017 Hanwha Vision Co., Ltd. All rights reserved.

商標について

本書に記載されている各商標は登録済みです。本書に記載されている本製品の名称およびその他の商標は、各社の登録商標です。

制約について

本書の著作権は留保されています。どのような状況であっても、本書の一部または全体を複製、配布または変更するには、正式な認可が必要です。

免責事項について

Hanwha Vision はマニュアルの完全性および正確性について万全を期しておりますが、その内容について公式に保証するものではありません。このマニュアルの使用およびその結果については、すべてユーザーが責任を負うことになります。
Hanwha Vision は事前の通知なしにこのマニュアルの内容を変更する権利を留保します。

❖ 設計および仕様は予告なく変更する場合があります。

❖ デフォルトの管理者IDは"admin"です。パスワードは初めてログインするときに設定する必要があります。
個人情報を安全に保護し、情報窃盗による被害を防ぐため、パスワードは3か月ごとに変更してください。
パスワードの不正管理によって発生したセキュリティおよびその他の問題は、ユーザー側の責任であることに御注意ください。

重要な安全ガイド

1. 本書の説明をよく読んで下さい。
2. 本書の指示を守ってください。
3. 全ての警告を留意してください。
4. 全ての指示に従って下さい。
5. 本機を水の傍で使用しないで下さい。
6. お手入れは乾いた布のみを使用して行って下さい。
7. どの換気孔も塞がないようにして下さい。メーカーの指示に従って取り付けて下さい。
8. ラジエーター、熱レジスタ、あるいは熱を発するその他の装置（アンプを含む）などの熱源の傍に設置しないで下さい。
9. 分極タイプあるいは接地タイプのプラグの安全目的を必ず守ってください。 分極プラグには一方が他方より幅広い2本の足が付います。 接地プラグには2本の足とアース（接地）差込み先が付いています。2本の平たい足あるいは3本めの差込み先はユーザーの安全のために付いています。提供されたプラグがお使いのコンセントに合わない場合には、旧式のコンセントの交換について電気技師にご相談下さい。
10. 特にプラグ、ソケット、機器との接点でコードが踏まれたり引っ張っられたりしないよう電源コードを保護してください。
11. メーカーが指定する付属品のみを使用してください。
12. カート、スタンド、三脚、ブラケットはメーカー指定のもの、あるいは製品と一緒に販売されたもののみを使用してください。 カート使用する場合、カートと製品を動かす際には転倒による損傷に注意してください。

13. 雷雨のときまたは長期間使用しないは場合は、製品の電源プラグを抜いてください。
14. 全ての修理は資格のあるサービス・スタッフに任せて下さい。修理は電源コードあるいはプラグの損傷、液体をこぼした、または物体を機器内に落としてしまった、機器を雨や湿度にさらしてしまった、正常に機能しない、あるいは機能の低下など、様々な原因で機器が損傷した場合に必要となります。
15. この製品は「クラス2」または「LPS」と表示のある12 Vdc、0.56 Aの、記載の電源ユニットから電源供給するように作られています。
16. 製品取付け時に力を入れ過ぎると、カメラが損傷し、誤作動を起こす場合があります。
適切でないツールを使用して製品を力まかせに取り付けると、カメラが損傷する場合があります。
17. 化学物質やオイルミストが存在する、または生成される可能性のある場所には製品を取り付けないでください。大豆油のような食用油によって製品が損傷を受けたりゆがんだりするため、キッチンやキッチンテーブル付近には製品を取り付けないでください。
製品に損傷を与える原因となります。
18. 製品を取り付ける場合、製品表面が化学物質で汚染されないように注意してください。
クリーナーや接着剤のような化学溶剤は、製品表面に深刻な損傷を与える原因となります。
19. 推奨されない方法で製品を取り付け/取り外した場合、製品の機能/性能は保証できません。
ユーザーマニュアルの"取付けと接続"を参照して製品を取付けます。
20. 水中での製品の取付けや使用は、製品への深刻な損傷の原因となります。

警告

火災または感電防止のため、この装置を雨または湿気にさらさないでください。本製品の換気グリルまたはその他の開口部から金属製物質を差し込まないでください。

製品に液体をこぼしたりかけたりせず、また花瓶のように液体が入った物体を製品の上に載せたりしないでください。

損傷を防止するため、本製品を設置説明に従って壁 / 天井にしっかりと取り付けてください。

注意

注意

感電の危険がありますので開けないで下さい

注意 : 感電の恐れがありますので裏カバーは開けないで下さい。
如何なる場合にも本品の分解や改造を行わないで下さい。
資格のあるサービス・スタッフにお問い合わせ下さい。

グラフィック記号の説明

正三角形内の稲妻型の矢印は、本製品の筐体に人が感電する恐れのある " 高圧電流 " が存在することを、ユーザーに警告するものです。

正三角形内の感嘆符は、製品の操作およびメンテナンス（修理）に関する重要な付属説明書があることをユーザーに知らせるこものです。

クラス I 構造

クラス I 構造を持つ装置は保護接地接続のある本線ソケットに接続してください。

バッテリー

電源（バッテリーパックまたは取り付けた状態のバッテリー）は直射日光の当る場所や、熱器具の近くには置かないでください。

デバイスの切断

問題がある場合は、装置からメインプラグを抜きます。 次にお住まいの地域の修理会社に電話してください。

米国外では、認証機関が採用している取付け金具用の HAR コードが使用される場合があります。

注意

電池を間違ったタイプと交換すると爆発の危険性があります。
指示に従って使用済み電池を処分してください。

これらの保守説明書は、資格のあるサービススタッフのみが使用するものです。
感電の危険性を低減するために、資格がある場合を除き操作説明書に含まれていない修理は行わないでください。

入力電源は 1 台のカメラにのみ使用し、他のデバイスを接続しないでください。

ITE は、外部の施設ヘルーティングなしで、PoE ネットワークのみに接続することになっています。

次に示す安全のための推奨注意事項を熟読してください。

- 本製品は平らな場所に置いてください。
- 直射日光の当たる場所、暖房設備または低温区域の近くには取付けないでください。
- 本製品を導電性の高い物体の近くに置かないでください。
- 本製品は自分で修理しないでください。
- 本製品の上に水の入ったコップを置かないでくだ
- 磁気源のそばに取付けないでください。
- 換気口は塞がないようにしてください。
- 本製品の上に重いものを置かないでください。
- カメラを取り付ける/取り外すときは、保護手袋を着用してください。
  製品表面は高温になるため、やけどの原因となる場合があります。

ユーザーマニュアルは、本製品の使用方法に関するガイドブックです。

このマニュアルで使用する用語の意味を次に示します。

- 参照: 製品の使用方法についてのヘルプ情報を示す場合。
- 注意: 指示に従わないことで、ものや人に損害が発生する可能性がある場合。

※ 製品を使用する前に安全のためこのマニュアルを読み、大切に保管しておいてください。

特定なインストール環境で無線通信に干渉が発生する場合があります。
製品と周囲の無線通信デバイスの間に電磁波干渉が発生する場合、無線通信デバイスとの間隔を拡張したり、通信用のアンテナ方向を調整することをお勧めします。

目次

概要 3

3 重要な安全ガイド
6 お奨めする PC 仕様
6 推奨マイクロSD/SDHC/SDXCメモリカード仕様
6 NAS推奨仕様
6 キット内容
8 概観 (QND-7010R/7020R/7030R)
10 概観 (QNO-7010R/7020R/7030R)
11 概観 (QNV-7010R/7020R/7030R)

取付けおよび接続 13

13 取付け (QND-7010R/7020R/7030R)
14 取付け (QNO-7010R/7020R/7030R)
15 取付け (QNV-7010R/7020R/7030R)
18 マイクロSDメモリカードの挿入/取出し
19 メモリカード情報 (別売)
20 他のデバイスとの接続

ネットワーク接続と設定 23

23 カメラを直接ローカルネットワークに接続する
23 カメラを直接DHCPベースのDSL/ケーブルモデムに接続する
24 PPPoEモデムへのカメラの直接接続
24 PPPoE/ケーブルモデムでカメラとブロードバンドルーターを接続する
25 Device Managerを使用する
25 自動にカメラを検索する
25 IPアドレスを設定する
26 手動でカメラを登録する
26 自動にIPを設定する
27 ートフォワード（ポートマッピング)の設定
28 共有ローカルPCからカメラへの接続
28 リモートPCからインターネット経由でのカメラへの接続

WEB VIEWER 29

29 カメラへの接続
30 パスワード設定
30 ログイン
30 カメラ・ウェブビューアーの設定

付録 31

31 トラブルシューティング
32 Open Source Announcement

お奨めする PC 仕様

- CPU：Intel(R) Core(TM) i7 3.4 GH 以降
- 対応 OS : Windows 7, 8.1, 10, Mac OS X 10.9, 10.10, 10.11
- **プラグインフリーの Web Viewer**
  サポートするウェブブラウザ : Google Chrome 47、MS Edge 20
- **プラグイン Web Viewer**
  サポートするウェブブラウザ : MS Explorer 11、Mozilla Firefox 43、Apple Safari 9 ※ Mac OS X でのみサポート
- VGA : PCIe をサポートする 256MB 以上のビデオ GDDR3 以上のメモリをサポートするグラフィックカード

推奨マイクロ SD/SDHC/SDXC メモリカード仕様

- 推奨容量 : 4GB ～ 128GB (uhs-1 クラス)
- 以下のメーカー製メモリカード を使用することをお奨めします :
  マイクロ SD/SDHC/SDXC メモリカード : Sandisk、Transcend

NAS 推奨仕様

- 推奨容量 : 200GB 又はそれ以上を推奨します。
- このカメラのために、NAS を以下の製造仕様で利用することを推奨します。
  推奨製品 : QNAP NAS, Synology NAS

キット内容

製品パッケージに、カメラと付属品がすべて同梱されていることをご確認ください。
（販売国ごとに付属品が異なるため。）

外観	品目名	数量	説明	モデル名
	カメラ	1		QND-7010R/7020R /7030R
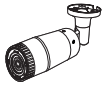		1		QNO-7010R/7020R /7030R
		1		QNV-7010R/7020R /7030R
	クイックガイド（オプション）	1		すべてのモデルで使用
	テンプレート	1	製品設置ガイド	すべてのモデルで使用
	電源端子台	1	電源プラグに差し込む	QND-7010R/7020R /7030R, QNV-7010R/7020R /7030R

外観	品目名	数量	説明	モデル名
	十字穴付きネジ	2	本製品をパイプ、壁面などに取り付ける場合または穴をふさぐときに、ドームケースを組み立てるために使用します。	QND-7010R/7020R/7030R, QNV-7010R/7020R/7030R
	L 型レンチ	1	カメラの方向を操作するために使用 / ドーム型カバーを取り外し、交換するために使用	QNO-7010R/7020R/7030R, QNV-7010R/7020R/7030R
	タッピングネジ	2	壁または天井に取付けるために使用します	QND-7010R/7020R/7030R, QNV-7010R/7020R/7030R
		3		QNO-7010R/7020R/7030R
	アラームケーブル	1	アラームに接続するときに使用	QND-7010R/7020R/7030R
	RJ45 防水アクセサリー	1	湿気のある場所に取り付けるために使用	QNO-7010R/7020R/7030R

外観	品目名	数量	説明	モデル名
	日除け	1	カメラを直射日光から保護します	QNO-7010R/7020R/7030R
	日除け留め	1	日除けをカメラに固定します	QNO-7010R/7020R/7030R
	カード型吸湿剤	3	取り付け時に貼りつけます。	QNO-7010R/7020R/7030R
		1		QNV-7010R/7020R/7030R
	電源ケーブル	1	電源ポートへプラグを差し込むために使用	QNV-7010R/7020R/7030R
	オーディオ / アラームケーブル	1	オーディオポート及びアラームポートへの接続に使用	QNV-7010R/7020R/7030R

外観	品目名	数量	説明	モデル名
	ケーブルブッシュ	1	直径が 7 ～ 8.5mm の LAN ケーブルとの接続に使用します。	QNV-7010R/7020R /7030R
	プラスチックアンカー	2	ネジを固定するために穴に挿入します（固定力を強化）	QNV-7010R/7020R /7030R
オプション（同梱されていません）				
	ポールマウントブラケット		円筒状ポールマウントブラケット	QNO-7010R/7020R /7030R

概観 (QND-7010R/7020R/7030R)

外観

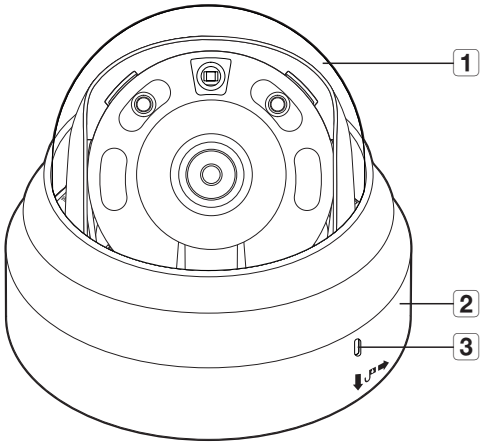

項目	説明
1 ドームカバー	レンズとメインユニットの保護に使用するケースカバー。
2 カメラケース	カメラ本体を保護するハウジング部分。
3 マイクの穴	マイクは内蔵されています。

部品

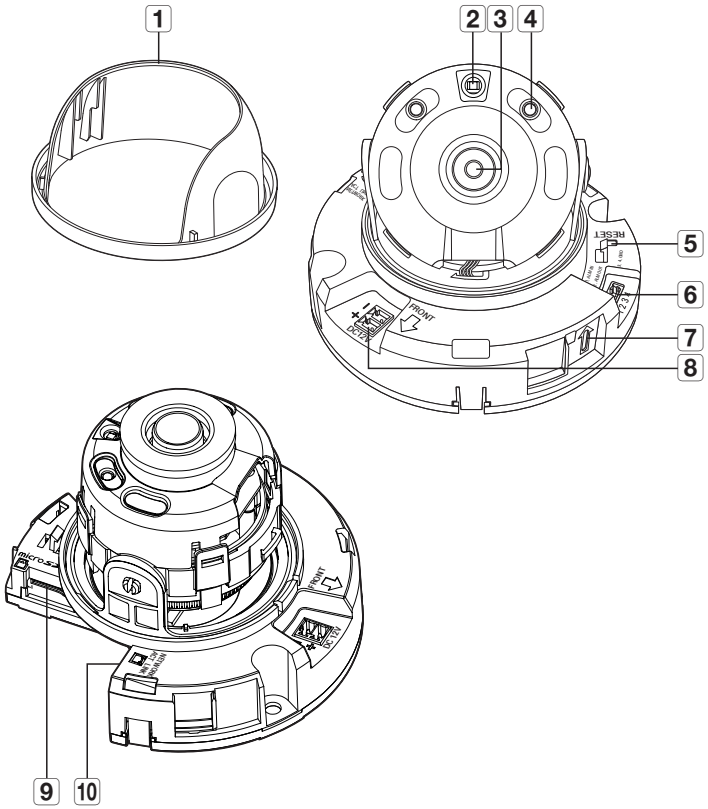

項目	説明	
1 内部カバー	本体用の保護カバー。	
2 照度センサー	入射光を検知して、赤外線 LED を制御します。	
3 レンズ	カメラのレンズ。	
4 赤外線 LED	これらの赤外線 LED は照度センサーによって制御されます。	
5 リセット・ボタン	すべてのカメラ設定を工場出荷時のデフォルトに復元します。 約 5 秒間押し続けてシステムを再起動します。 ! カメラをリセットすると、DHCP を有効化されるようにネットワーク設定が調整されます。ネットワーク内に DHCP サーバーがない場合は、Device Manager プログラムを用いて 基本的なネットワーク設定 (IP アドレス、Subnet Mask、Gateway など) を再設定してから 接続することができます。	
6 アラーム入出力ポート	ARM-IN	アラーム入力センサーや外部デイ / ナイトセンサーを接続するために使用します。
	ARM-OUT	アラーム出力信号の接続に使用します。
	GND	アラーム入力 / 出力信号を接続する共通ポートがあります。
7 マイクの穴	マイクは内蔵されています。	
8 電源ポート	電源端子台用ポート。	
9 マイクロ SD メモリカードの区画	マイクロ SD メモリカードの区画。	
10 ネットワークポート	ネットワーク接続用の PoE またはイーサネットケーブルの接続に使用します。	

概観 (QNO-7010R/7020R/7030R)

外観

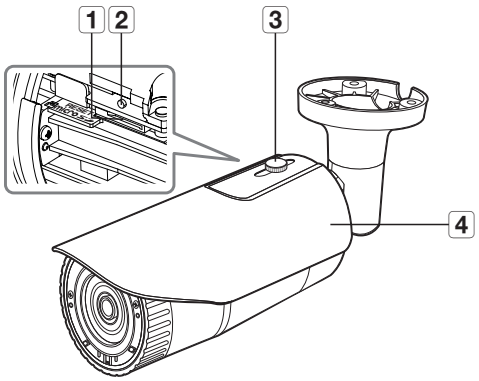

項目	説明
1 MicroSD カードスロット	(製品の内部空間) MicroSD カードを挿入できるスロットです。
2 リセット・ボタン	すべてのカメラ設定を工場出荷時のデフォルトに復元します。 約 5 秒間押し続けてシステムを再起動します。 カメラをリセットすると、DHCP を有効化されるようにネットワーク設定が調整されます。ネットワーク内に DHCP サーバーがない場合は、Device Manager プログラムを用いて 基本的なネットワーク設定 (IP アドレス、Subnet Mask、Gateway など) を再設定してから 接続することができます。
3 日除け留め	日除けをカメラに固定します。
4 日除け	カメラを直射日光から保護します。

- レンズ表面の汚れは、レンズティッシューまたはエタノールを染み込ませた布でそっと拭き取ってください。

部品

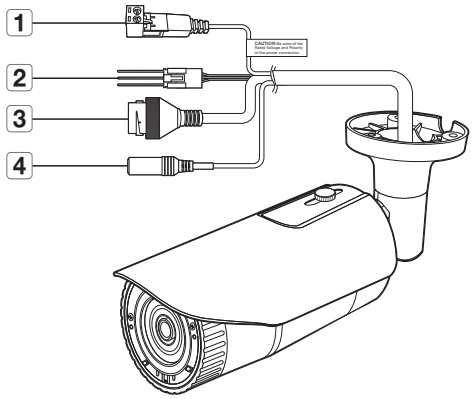

項目	説明	
1 電源ポート	電源ケーブルの差込みに使用します。	
2 アラーム入出力ポート	ARM-OUT	アラーム出力信号の接続に使用します。
	GND	アラーム入力 / 出力信号を接続する共通ポートがあります。
	ARM-IN	アラーム入力センサーや外部デイ / ナイトセンサーを接続するために使用します。
3 ネットワークポート	ネットワーク接続用の PoE またはイーサネットケーブルの接続に使用します。	
4 音声入力ジャック	マイクの接続に使用します。	

概観 (QNV-7010R/7020R/7030R)

外観

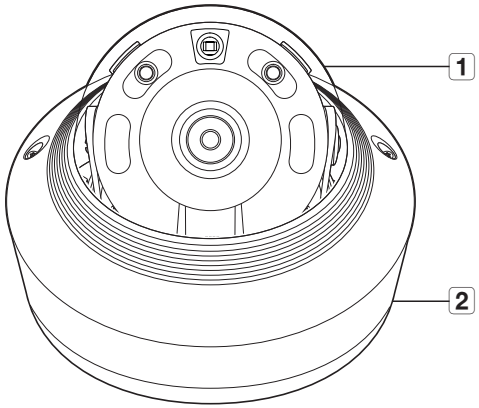

項目	説明
1 ドームカバー	レンズとメインユニットの保護に使用するケースカバー。
2 カメラケース	カメラ本体を保護するハウジング部分。

部品

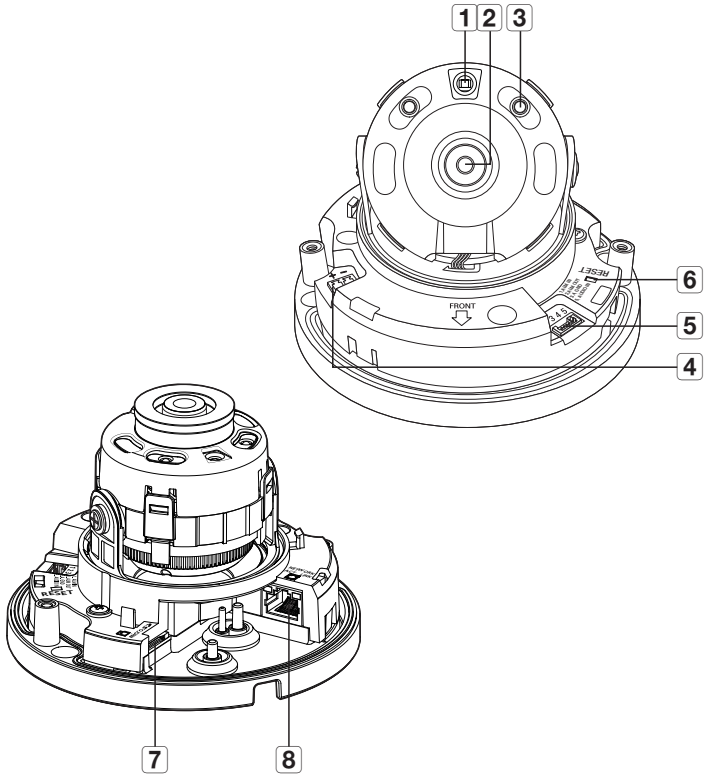

項目	説明
1 照度センサー	入射光を検知して、赤外線 LED を制御します。
2 レンズ	カメラのレンズ。
3 赤外線 LED	これらの赤外線 LED は照度センサーによって制御されます。
4 電源ポート	電源端子台用ポート。
5 オーディオポート及びアラームケーブルポート	オーディオ及びアラームケーブルを接続して、外部アラーム機器 / マイクと接続する端子です。
6 リセット・ボタン	すべてのカメラ設定を工場出荷時のデフォルトに復元します。 約 5 秒間押し続けてシステムを再起動します。 ! カメラをリセットすると、DHCP を有効化されるようにネットワーク設定が調整されます。 ネットワーク内に DHCP サーバーがない場合は、Device Manager プログラムを用いて 基本的なネットワーク設定 (IP アドレス、Subnet Mask、Gateway など) を再設定してから 接続することができます。
7 マイクロ SD メモリカードの区画	マイクロ SD メモリカードの区画。
8 ネットワークポート	ネットワーク接続用の PoE またはイーサネットケーブルの接続に使用します。

取付け (QND-7010R/7020R/7030R)

取付けに関する注意事項

カメラを取り付ける前に、以下の指示をよく読んでください。

- 取付ブラケットを含むカメラの5倍の重量に耐えることができる場所（天井または壁）にインストールする必要があります。
- 引っかかっていたり、はがれたケーブルは製品の損傷または火災の原因となります。
- 安全のため、設置場所に人を近づけないでください。
  また、万が一のため持ち物は取付け場所には置かないでください。

取外し

1. 片手でカメラの底部をおさえて、別の手で反時計回りにカバーを回し、取り外します。

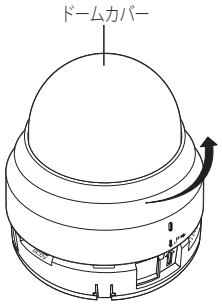

2. 内側のカバーを持ち上げて取り外します。

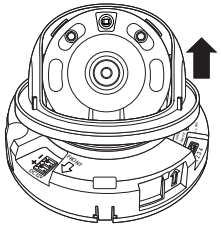

取付け

1. 図に示すように、選択した箇所にテンプレートを取り付け、3 つ穴を開けます。

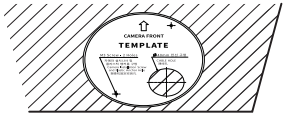

2. 付属のタッピンねじ 2 つを使用し、型板を使用してドリルで開けた穴 2 つにカメラを固定します。
- 刻印された <⇧> マークがカメラの監視方向を向くようにセットします。

3. 対応するケーブルを用いカメラ内部の端末を接続します。

4. " **カメラの監視方向の調整** " セクションを参照してレンズを目的の方向に調整します。(17 ページ)

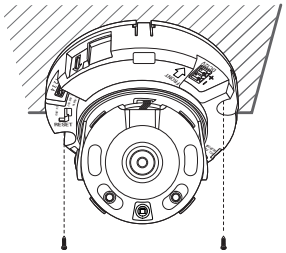

- カメラのレンズは製造の最終工程の段階で、適切な場所に焦点が合わせられているため、レンズには触れないようにしてください。もし触れてしまうと、レンズの焦点がずれるか、異物により汚れるおそれがあります。

5. 内側のカバーを本体に接続します。

6. カメラの底面を掴み、もう片方の手でカバーを掴んで押して図のように2つの矢印マークを揃えます。

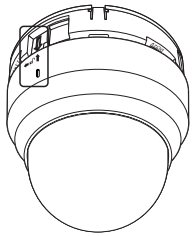

- ドームカバーを組み立てるには、矢印同士を一致させ、カバーをしっかりと押してください。
  ドームカバーを回転させ組み立てたり、正確に組み立てない場合、乱反射現象が発生したり、レンズ部分が回転し撮影範囲が変更されることがあります。
- 図に示すように、ドームカバーが正しく底部に接続されていることを確認します。
  スナップフィットが正しく接続されていないと、ドームカバーが倒れ、けがの原因になる場合があります。

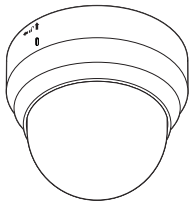

取付け (QNO-7010R/7020R/7030R)

- 本カメラは防水であり、IP66仕様に準拠していますが、外部ケーブルに接続されるジャックはそうではありません。ケーブルが外部に突出するのを防止するために軒先の下に本製品をインストールすることをお勧めします。

取付けに関する注意事項

カメラを取り付ける前に、以下の指示をよく読んでください。

- 取付ブラケットを含むカメラの5倍の重量に耐えることができる場所（天井または壁）にインストールする必要があります。
- 引っかかっていたり、はがれたケーブルは製品の損傷または火災の原因となります。
- 安全のため、設置場所に人を近づけないでください。
  また、万が一のため持ち物は取付け場所には置かないでください。

取付け

1. 目的の場所に取付用のテンプレートを付着し、ホール 3 ヶ所に図のような大きさで穴を開けてください。

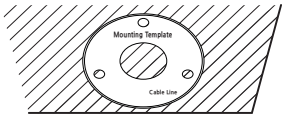

2. 付属のタッピンネジ 3 個を使用してホール 3 ヶ所にカメラを固定してください。

3. 適切なケーブルをカメラ端末に接続します。

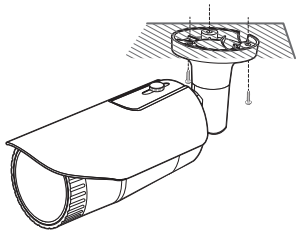

4. 付属の L 型レンチを使用してカメラ方向を調節します。

- ブラケットを使用してカメラ位置を調整するとき、ブラケットねじを緩め、カメラを調節し、締め付けます。ねじが固定されている状態で力任せに調節しようとすると、傷がつく恐れがあります。

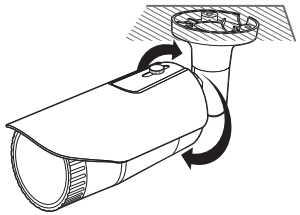

RJ45 防水ケーブルを LAN ケーブルに接続する方法

1. 矢印の方向に挿入します。

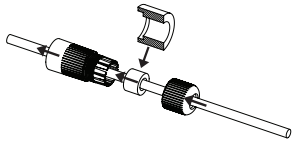

2. LAN コネクタ（オス）をケーブルに接続します。

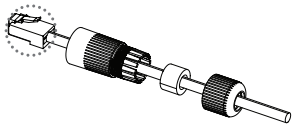

3. RJ45 モジュラージャック（メス）を RJ45 コネクタ（オス）に接続します。

- 部品はそれぞれ分かれたままにしてください。

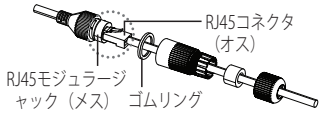

4. RJ45 モジュラージャック（メス）と RJ45 保護カバーを時計回りに回転させて組み立てます（矢印に従う）。

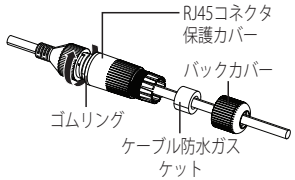

5. RJ45 保護カバーとバックカバーを時計回りに回転させて組み立てます（矢印に従う）。
バックカバーを組み立てるとき、ケーブル防水ガスケットをケーブルにしっかり取り付けて防水します。

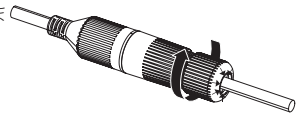

- これを完全に組み立て、RJ45コネクタのねじ山の端までバックカバーを回転させます。

屋外設置

建物の外に本製品を取り付ける際、屋外に接続されたケーブルとの隙間から水が漏入しないように、防水ブチルゴムテープ（店舗で購入することができます）を使って防水してください。

1. 電源、I / O、AUDIO、および LAN ケーブルを接続します。
2. 防水ブチルゴムテープの半分以上が重なるようにして黒のケーブルジャケット（エリア A）とケーブル接続箇所を巻きつけます。

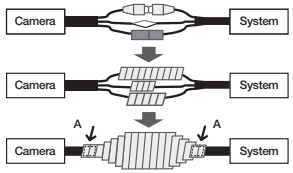

- ケーブルジャケットが適切に防水加工されていない場合、それが直接漏れを引き起こす可能性があります。ケーブルをテープで何度も巻くことで保護するようにしてください。
- 防水ブチルテープはブチルゴムで作られており、通常の2倍の長さに伸ばすことができます。

取付け (QNV-7010R/7020R/7030R)

- 本カメラは防水であり、IP66仕様に準拠していますが、外部ケーブルに接続されるジャックはそうではありません。ケーブルが外部に突出するのを防止するために軒先の下に本製品をインストールすることをお勧めします。

取付けに関する注意事項

カメラを取り付ける前に、以下の指示をよく読んでください。

- 取付ブラケットを含むカメラの5倍の重量に耐えることができる場所（天井または壁）にインストールする必要があります。
- 引っかかっていたり、はがれたケーブルは製品の損傷または火災の原因となります。
- 安全のため、設置場所に人を近づけないでください。
  また、万が一のため持ち物は取付け場所には置かないでください。

取外し

1. 付属のL型レンチを使用し、ドームカバーの締め付けボルト2つを反時計回りに回し、カバーを取り外します。

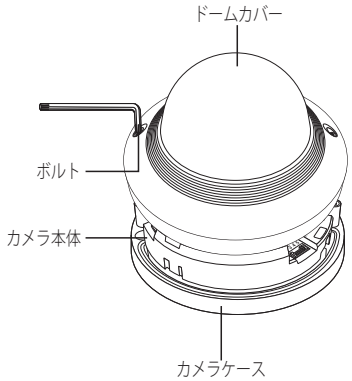

取付け

1. 付属品の型紙を使用し、ネジを通す穴（線径6mm、最小内幅55mm）をドリルで開け、付属品のプラスチックアンカーを端までしっかりと挿入します。
2. 下部の穴をアンカーの穴に固定し、タッピングネジ（M4.5xL50）を挿入して固定します。
3. 必要なケーブルを接続して、カメラ取付け時に損傷したりねじれないように配線します。
4. "**カメラの監視方向の調整**"セクションを参照してレンズを目的の方向に調整します。(17ページ)
5. ドーム型カバーを閉じてください。
   - L型レンチを使用し締め付けボルトを確実に締め、水漏れを防ぎます。

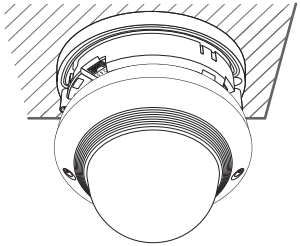

LAN ケーブルを接続する

1. ドーム型カバー及びケースを取り外してください。
2. 底部のラバープラグの長く突き出た部分を引き、図に表示されているように取り外してください。

- LANケーブルと接続するのに適切なケーブルブッシュを使用してください。
  - 基本のカメラ：直径 5.0 ～ 6.5mm のケーブルを使用してください。
  - 同梱のコンポーネント：直径 7.0 ～ 8.5mm のケーブルを使用してください。

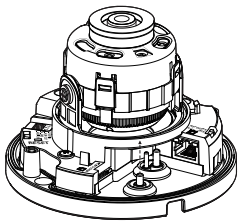

3. LANケーブルを上記のステップ 2 にあるラバープラグの突き出た部分を取り外して作った大きい穴に挿入してください。
4. 覆いをケーブルカッターで取り外し、ケーブルを調整してください。
5. LANケーブルをLANコネクタで接続し、LANツールに挿入してください。
6. 完成したケーブルをEthernetポートに接続してください。

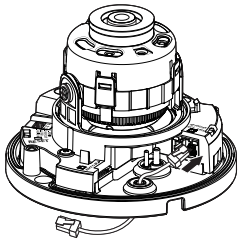

オーディオ / アラームケーブル及び電源ケーブルを接続する

1. ドーム型カバー及びケースを取り外してください。
2. 底部のラバープラグの長く突き出た部分を引き、図に表示されているように取り外してください。

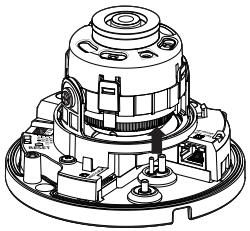

3. NO.2のゴムキャップを取り除いてできた穴を通してアラーム/音声ケーブルを挿入し、ケーブルをアラーム端子に接続します。
4. カメラを取り付けるときに傷ついたり、押しつぶされたりしないようにケーブルを調整してください。
5. アラーム/音声ケーブルにあるゴムキャップを穴に付けます。

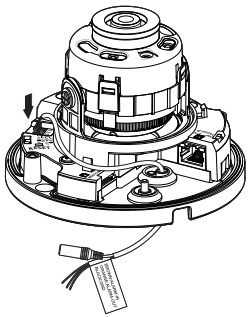

6. 小さいホールを通して電源ケーブルを入れ、長い溝に沿って電源ケーブルを入れてください。
7. 電源ケーブルを電源端子ブロックに接続してください。
8. "**カメラの監視方向の調整**"セクションを参照してレンズを目的の方向に調整します。(17ページ)
9. ーム型カバーを取り付けてください。

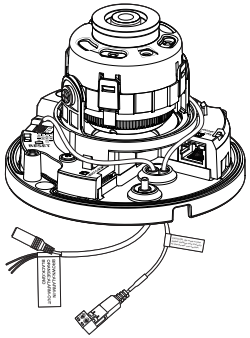

別売りのアダプタへの取付け

次のオプション（別売り）のうち必要なものを、設置場所に合わせてまたは必要に応じて選択および購入してください。

1. "**取外し**"部を参照して、ケースからドーム型カバーを取り外してください。(15ページ)
2. 同梱のテンプレートを使用して、カメラ用の穴とネジ用の穴（直径5mm、深さは最低35mm）を1つずつ開け、プラスチックアンカー（HUR 5）をねじ穴の端に差し込みます。
3. 必要なケーブルを接続して、カメラ取付け時に損傷したりねじれないように配線します。
4. 分解したときと逆の順序でカメラ本体を"**取外し**"ます。
5. "**カメラの監視方向の調整**"セクションを参照してレンズを目的の方向に調整します。（17ページ）
6. ーム型カバーを閉じてください。
   - L型レンチを使用し締め付けボルトを確実に締め、水漏れを防ぎます。

屋外設置

建物の外に本製品を取り付ける際、屋外に接続されたケーブルとの隙間から水が漏入しないように、防水ブチルゴムテープ（店舗で購入することができます）を使って防水してください。

1. 電源、I / O、BNC、およびLANケーブルを接続します。
2. 防水ブチルゴムテープの半分以上が重なるようにして黒のケーブルジャケット（エリアA）とケーブル接続箇所を巻きつけます。

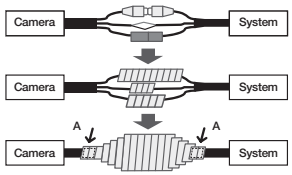

- ケーブルジャケットが適切に防水加工されていない場合、それが直接漏れを引き起こす可能性があります。ケーブルをテープで何度も巻くことで保護するようにしてください。
- 防水ブチルテープはブチルゴムで作られており、通常の2倍の長さに伸ばすことができます。

設置のためのオプション付属品

設置を容易にするため、適切なオプション付属品を購入できます。

1. 壁面取付け用アダプタ（SBP-300WMまたはSBP-300WM1）/ ハンギング・マウント（QND-7010R/7020R/7030R : SBP-300HM8）
ドーム・カメラを壁に設置するために使用するアダプタです。

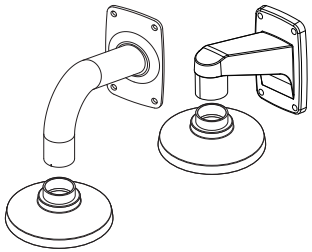

2. 天井取付け用アダプタ(SBP-300CM) / ハンギング・マウント（QND-7010R/7020R/7030R : SBP-300HM8）
ドーム・カメラをコンクリート製の天井に設置するために使用するアダプタです。

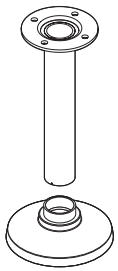

3. 柱取付け用アダプタ（SBP-300PM）
直径が80mmを超える柱に壁面取付け用アダプタ（SBP-300WMまたはSBP-300WM1）を設置するためのアダプタです。

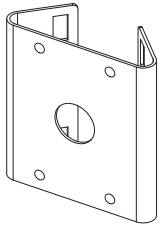

4. コーナー・マウント・アダプタ（SBP-300KM）
壁面取付け用アダプタ（SBP-300WMまたはSBP-300WM1）を壁接合部のコーナーに設置するためのアダプタです。

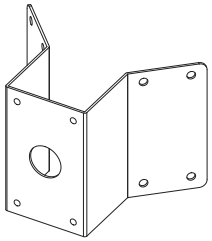

カメラの監視方向の調整 (QND-7010R/7020R/7030R, QNV-7010R/7020R/7030R)

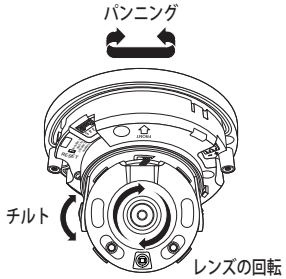

▪ 監視方向の調整

カメラが天井に固定されている場合にのみカメラの方向を調整できます。
この場合、カメラユニットを左右に回すことをパンニング、上下角度を調整することをチルト、軸を中心にレンズを回転することを回転と言います。

- パンニングの有効範囲は合計 350 度です。
- 回転の有効範囲は合計 355 度です。
- チルトの有効範囲は合計 67 度です。

- 角度によっては画像がカメラケースによって覆われることがあります。
- ドームケースを分解した後、無理にフォーカス/ズームレンズを回転させないでください。
  無理に回転すると、モーターが故障して焦点が合わなくなることがあります。

▪ 調整方法

1. カメラを取り付けた後、監視方向に応じてパンニングの角度を調整します。

2. 画像が反転しないように水平角を設定します。

3. カメラが監視する被写体の方向を向くようにチルトの角度を調整します。

マイクロ SD メモリカードの挿入 / 取出し

- マイクロSDメモリカードを挿入する前に、カメラの電源ケーブルを抜いてください。
- 上下反対のままマイクロSDメモリカードを無理に挿入しないでください。
  無理に差し込むと、マイクロ SDメモリカードが破損する恐れがあります。
- 雨あるいは高湿度の状態でMicroSDカードを挿入したり取り出したりすることは推奨されません。
- 取り外した製品カバーは5分以内に戻す必要があります。そうしなかった場合、内部結露が起こるリスクがあります。

マイクロ SD メモリカードの挿入 (QNO-7010R/7020R/7030R)

1. フロントカバーをアンロック [ ] 方向に回してください。

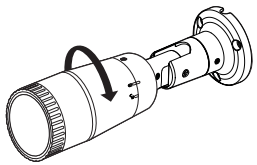

2. 前カバーを引き、取り外します。

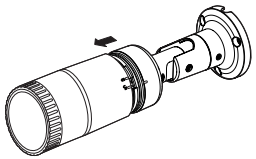

3. 図のように、MicroSD カードを矢印方向へ挿入します。

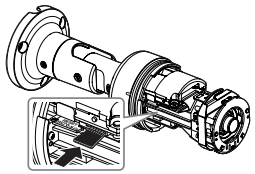

マイクロ SD メモリカードの挿入 (QND-7010R/7020R/7030R, QNV-7010R/7020R/7030R)

1. カメラのドームカバーを取り外します。

2. 図のように、MicroSD カードを矢印方向へ挿入します。

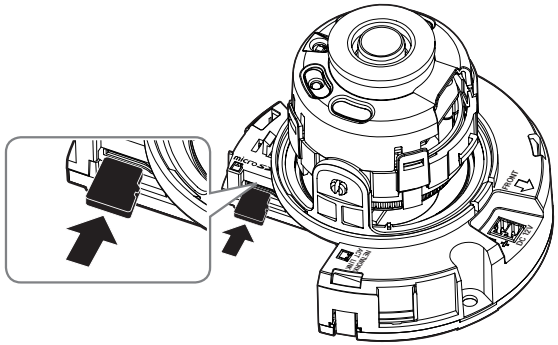

<QND-7010R/7020R/7030R>

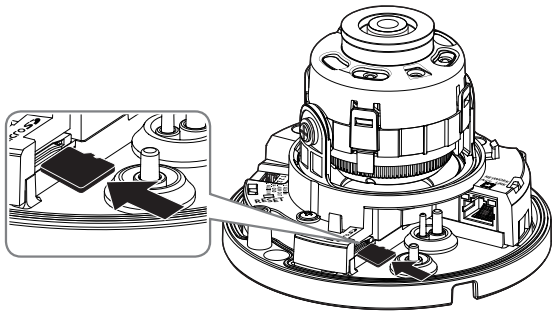

<QNV-7010R/7020R/7030R>

マイクロ SD メモリカードの取出し

図に示されているように、メモリカードの露出部分を慎重に押して、スロットからメモリカードを取り出します。

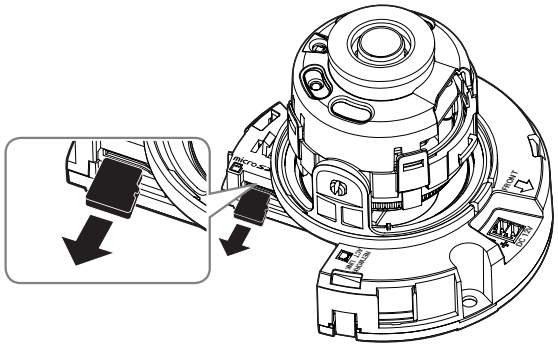

<QND-7010R/7020R/7030R>

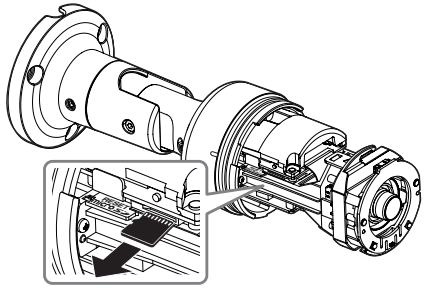

<QNO-7010R/7020R/7030R>

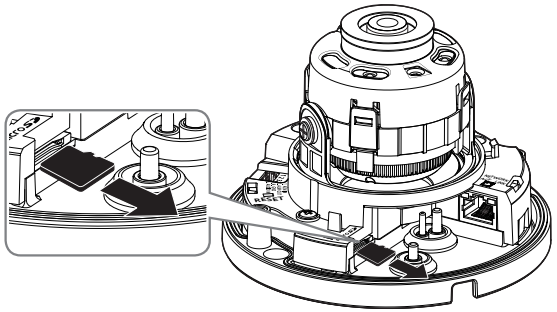

<QNV-7010R/7020R/7030R>

- マイクロ SDメモリカードを強く押しすぎると、手を放したときに、カードがスロットから勢いよく飛び出す可能性があります。
- お使いのマイクロSDメモリーカードを取り外す前に、カメラのスイッチを切るか <**ストレージ**> へ移動し、デバイスのスイッチを切り、[**適用** (適用)]ボタンを押します。
- カメラのスイッチを切るか、データの入っているマイクロ SDメモリーカードを製品から抜くと、データが失われるか、または損傷を受ける場合があります。

メモリカード情報 (別売)

メモリカードとは

メモリカードは、デジタルデバイスを使用して動画、音声およびテキストデータを記録およ び共有するために新たに開発された外部データ記憶装置です。

用途に応じたメモリカードの選択

ご購入されたカメラは、マイクロ SD/SDHC/SDXC メモリカードに対応しています。
しかし、メモリカードのモデルおよび型によって、互換性に障害が生じる場合があります。

以下のメーカー製メモリカードを使用することをお奨めします :
マイクロ SD/SDHC/SDXC メモリカード : Sandisk、Transcend

このカメラには、4 ～ 128GB（uhs-1 クラス）のメモリーカードの使用をお勧めします。

プレイバック機能は、メモリカードの速度に左右されるので、高速メモリカードを使用して ください。

メモリカードの部位

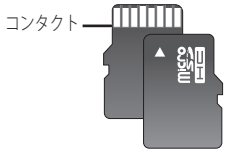

Micro SD/SDHC/SDXC

他のデバイスとの接続

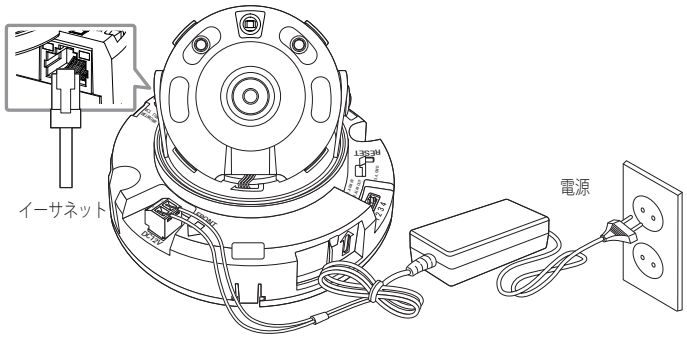

<QND-7010R/7020R/7030R>

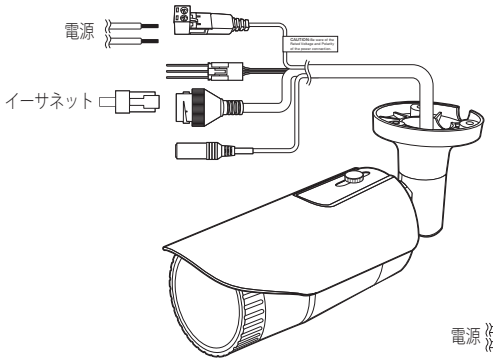

<QNO-7010R/7020R/7030R>

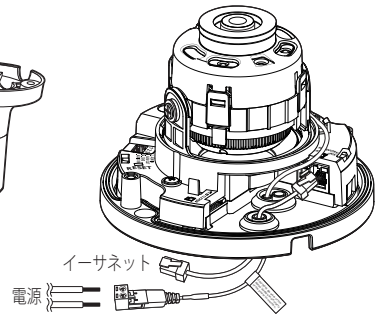

<QNV-7010R/7020R/7030R>

イーサネット接続

イーサネットケーブルをローカルネットワークもしくはインターネットに接続します。

電源

ドライバーを使用して、電源ケーブルの各線（+、–）をカメラの対応する電源ポートに接続します。

- PoEとDC 12Vの両方に同時に接続した場合、この製品はPoEによって電力が供給されます。
  - また、PoE 対応ルーターを使用して、カメラに電源を供給することもできます。
  - IEEE 802.3af プロトコルに準拠した PoE を使用してください。
  - PoE と DC 12V から 1 つの電源のみを使用することをお勧めします。
- 電源ケーブルの接続時に、極性を逆にしないようご注意ください。
- 外部デバイスを接続する場合は、作業を進める前に外部デバイスの電源を切る必要があります。

各モデルの電源ケーブルの仕様

直流12V入力の場合:

ワイヤータイプ（AWG）	#22	#20	#18
ケーブルの長さ（最長）	24m	38m	60m

ネットワークケーブルの仕様

アイテム	コンテンツ	備考
コネクタ	RJ45	
イーサネット	10/100BASE-T	10/100 Mbps
ケーブル	UTP カテゴリ 5e	
最大距離	100M	
PoE サポート	IEEE 802.3af	

音声入力への接続

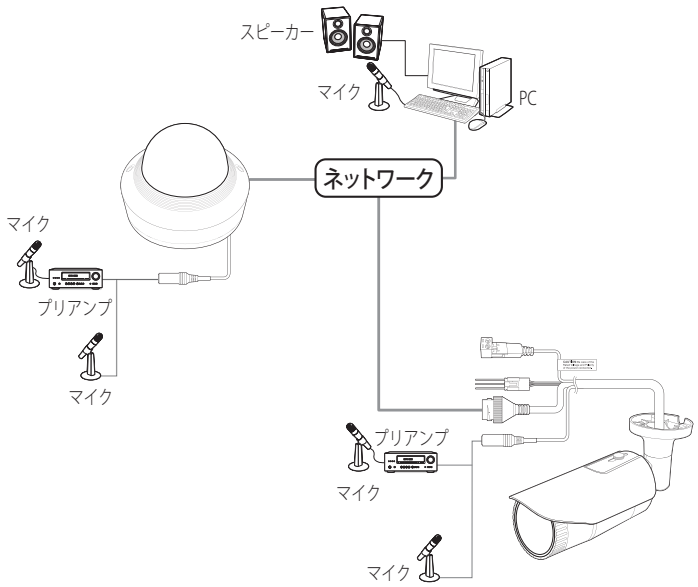

1. カメラのAUDIO INポートをマイクに接続するか、マイクが接続されているアンプのLINE OUTポートに接続します。

- 外部マイクを接続せずに、カメラの内蔵マイクを使用できます。
  (QND-7010R/7020R/7030RRでのみ使用可)

2. 音声入力の仕様を確認します。

- 音声コーデック
  - 音声入力：G.711 PCM (ビットレート : 64kbps / サンプリング周波数 : 8kHz)、G.726 ADPCM (ビットレート : 16Kbps、24Kbps、32Kbps、40Kbps / サンプリング周波数 : 8kHz)
- 全二重音声
- **音声入力 (QND-7010R/7020R/7030R)** : 選択可能 (内蔵マイク)、サポートされる電圧: 2.5VDC (4mA)、入力インピーダンス: 2K オーム
- **音声入力 (QNO-7010R/7020R/7030R, QNV-7010R/7020R/7030R)** : 選択可能 (マイク/ライン入力)、サポートされる電圧: 2.5VDC (4mA)、入力インピーダンス: 2K オーム

I/O ポートボックスへの接続

アラーム入・出ケーブルを、ポートボックスの対応する部分と接続してください。

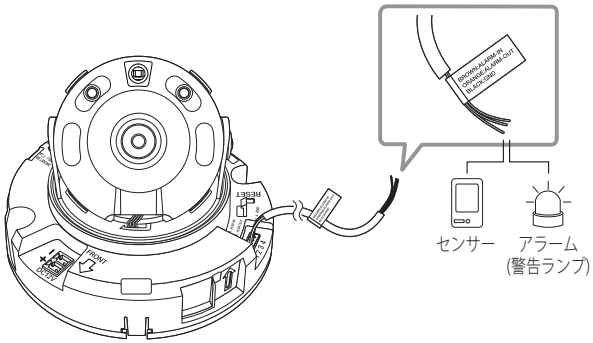

<QND-7010R/7020R/7030R>

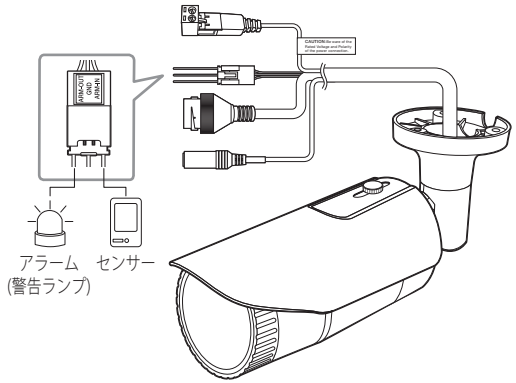

<QNO-7010R/7020R/7030R>

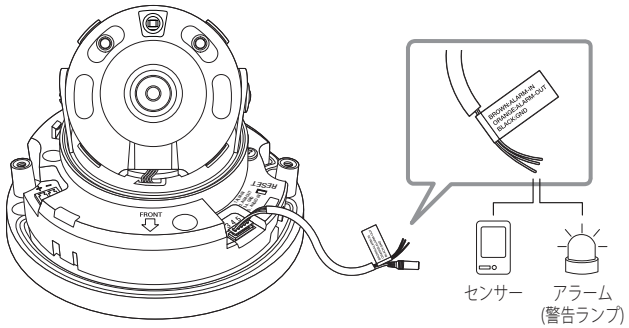

<QNV-7010R/7020R/7030R>

- ALARM-IN : アラーム入力センサーや外部デイ/ナイトセンサーを接続するために使用します。
- ALARM-OUT : アラーム出力信号の接続に使用します。
- GND : アラーム入出力信号用の共通ポートです。

- 電圧と電流が規格外のデバイス（例：閃光灯やサイレン）をオープンコレクタ方式で接続すると、故障の原因となる場合があります。
  電圧と現在の仕様内容を上回っているデバイスを接続するときは、"**アラーム出力配線図**"を参照してください。
  (22ページ)

外部センサーの接続

センサーの各信号ライン（2 つより）の一方を [**ALARM IN**] ポートに接続し、もう一方を [**GND**] ポートに接続します。

アラーム入力配線図

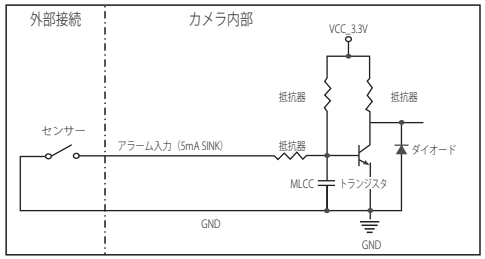

アラーム出力を接続するには

電圧と電流が規格外のデバイス（例：閃光灯やサイレン）をオープンコレクタ方式で接続すると、故障の原因となる場合があります。

電圧と電流が使用設定値を超えるデバイスを接続する場合は、以下のアラーム出力接続図を参照してください。

アラーム出力配線図

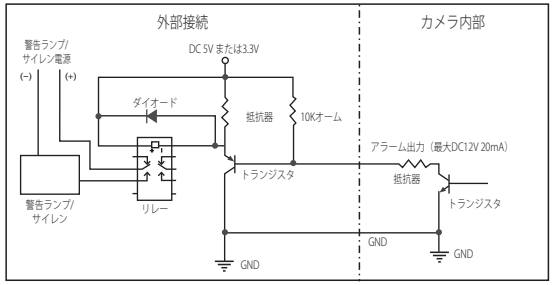

ネットワーク接続と設定

使用中のネットワーク環境に合わせてネットワークを設定することができます。

カメラを直接ローカルネットワークに接続する

LAN のローカル PC からカメラに接続する

1. ローカル PC でインターネットブラウザを起動します。
2. ブラウザのアドレスバーにカメラの IP アドレスを入力します。

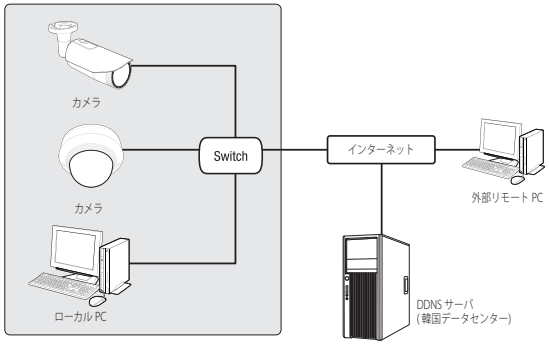

< ローカルネットワーク >

- LAN ネットワーク範囲外の外部インターネットのリモート PC は、ポート転送がきちんと設定されていない場合やファイアウォールが有効の場合には、設置済みカメラとインターネット接続ができない場合があります。
  この場合、ネットワーク管理者にお問い合わせください。
- 工場出荷時の設定で、IPアドレスがDHCPサーバーから自動的に割り当てられます。
  使用可能なDHCPサーバーがない場合、IPアドレスは192.168.1.100に設定されます。
  IPアドレスを変更するためには、Device Managerを使用してください。
  Device Managerの使い方は、「Device Managerを使用する」をご参照ください。(25ページ)

カメラを直接 DHCP ベースの DSL/ ケーブルモデムに接続する

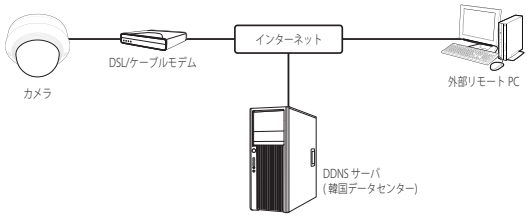

1. ユーザのPCをネットワークカメラに直接接続します。
2. Device Managerを使用してカメラのIPアドレスをユーザーのパソコンからインターネットブラウザで接続できるIPアドレスに変更してください。
3. インターネットブラウザを使用してWeb Viewerと接続します。
4. [**設定**]ページに移動します。
5. [**ネットワーク**] – [**DDNS**]に移動し、DDNSの設定を行います。
6. [**Basic**] – [**IP & ポート**]へ移動し、IP方式を [**DHCP**] に設定します。
7. PCから取り外したカメラを直接モデムに接続します。
8. カメラを再起動します。

- DDNSの設定方法についての情報は、ウェブビューアのオンラインヘルプを参照してください。
- IPフォーマットの設定方法についての情報は、ウェブビューアのオンラインヘルプを参照してください。

PPPoE モデムへのカメラの直接接続

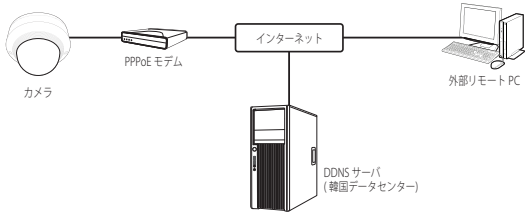

1. ユーザのPCをネットワークカメラに直接接続します。
2. Device Managerを使用してカメラのIPアドレスをユーザーのパソコンからインターネットブラウザで接続できるIPアドレスに変更してください。
3. インターネットブラウザを使用してWeb Viewerと接続します。
4. [**設定**]ページに移動します。
5. [**ネットワーク**] – [**DDNS**]に移動し、DDNSの設定を行います。
6. [**Basic**] – [**IP & ポート**] の設定ページへ移動し、IP方式を [**PPPoE**] に設定し、サービスのIDとパスワードを入力します。
7. PCから取り外したカメラを直接モデムに接続します。
8. カメラを再起動します。

- DDNSの設定方法についての情報は、ウェブビューアのオンラインヘルプを参照してください。
- IPフォーマットの設定方法についての情報は、ウェブビューアのオンラインヘルプを参照してください。

PPPoE/ ケーブルモデムでカメラとブロードバンドルーターを接続する

この方法は、ホーム、SOHO、および一般の店舗などの小規模ネットワーク環境に適しています。

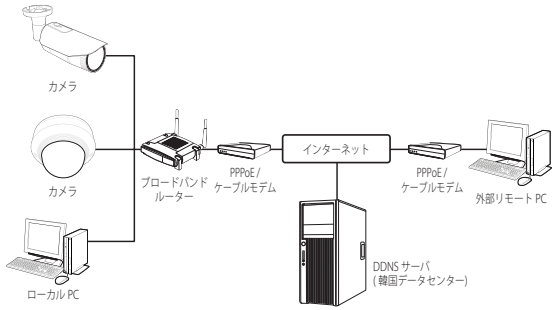

ブロードバンドルーターに接続したローカル PC のネットワーク環境の設定は

ブロードバンドルーターに接続したローカル PC のネットワーク環境の設定は、以下の手順で行ないます。

- 手順 : <**Network**> → <**Properties**> → <**Local Area Connection**> → <**General**> → <**Properties**> → <**Internet Protocol (TCP/IP)**> → <**Properties**> → <**Obtain an IP address automatically**> または <**Use the following IP address**>。
- <**Use the following IP address**> を選択する場合には、以下の手順を実行します:
  例 1) ブロードバンドルーター のアドレス (LAN IP) が 192.168.1.1
  IP アドレス : 192.168.1.100
  サブネットマスク : 255.255.255.0
  デフォルト ゲートウェイ : 192.168.1.1
  例 2) ブロードバンドルーター のアドレス (LAN IP) が 192.168.0.1
  IP アドレス : 192.168.0.100
  サブネットマスク : 255.255.255.0
  デフォルト ゲートウェイ : 192.168.0.1
  例 3) ブロードバンドルーター のアドレス (LAN IP) が 192.168.xxx.1
  IP アドレス : 192.168.xxx.100
  サブネットマスク : 255.255.255.0
  デフォルト ゲートウェイ : 192.168.xxx.1

- ブロードバンドルーターのアドレスに関しては、製品のユーザガイドを参照してください。
- ブロードバンドルーターのポートフォワーディングの詳細については、"**ートフォワード（ポートマッピング)の設定**"を参照してください。（27ページ）

DEVICE MANAGER を使用する

- Device Managerプログラムは、Hanwha Visionのウェブサイト(https://www.HanwhaVision.com)に接続して<**顧客支援**>-<**オンラインツール**>でダウンロードすることができます。
- Device Managerの詳しい使い方は、トップの<**ヘルプ**>メニューで確認することができます。

自動にカメラを検索する

Device Manager がインストールされた PC と同じネットワークにカメラが接続された場合、検索機能でネットワークカメラを探すことができます。

1. Device Managerのトップで<**検索**>をクリックしてください。
2. 検索リストで検索したいカメラが表示されているか確認してください。
   - カメラに付着されたステッカーでMACアドレスを確認してください。

IP アドレスを設定する

カメラのネットワーク設定を変更するためには、< **状態** > 項目に <**Login OK**> と表示される必要があります。
Device Manager のトップで < **認証** > をクリックすると、ログインできます。

Static IP を設定する

IP アドレス & ポート情報を手動で入力して設定します。

1. 検索リストでIP設定を変更するカメラをクリックしてください。
2. Device Managerのトップで<**IP割り当てる**>をクリックしてください。
3. <**IPアドレス手動割当**>を選択してください。
   - カメラのIP情報が既存に設定されている値で 表示されます。
4. IP関連項目&ポート関連項目を入力してください。

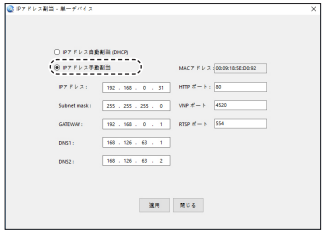

ブロードバンドルーターを使用しない場合

ネットワークマネージャーに <**IP アドレス** >、<**Subnet Mask**>、<**Gateway**> の設定値をお問い合わせください。

- HTTP ポート : インターネットブラウザを使用してカメラにアクセスする際に使用します。初期設定は80です。
- RTSPポート：リアルタイム・ストリーミングを制御するポートであり、初期値は554です。

ブロードバンドルーター使用の場合

- IP Address : ブロードバンドルーターによって指定されたIP範囲でアドレスを入力します。
  例）192.168.1.2~254、192.168.0.2~254、
  192.168.XXX.2～254
- Subnet Mask : ブロードバンドルーターの<**Subnet Mask**>が、カメラの<**Subnet Mask**>となります。
- Gateway : ブロードバンドルーターの<**Local IP Address**>が、カメラの<**Gateway**>となります。

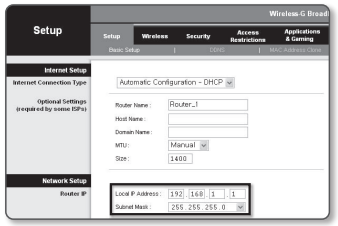

- 設定は、接続しているブロードバンドルーターのモデルによって異なる場合があります。
  詳細は、該当するルーターのユーザーマニュアルを参照してください。
- ブロードバンドルーターのポートフォワーディングの詳細については、"**ートフォワード（ポートマッピング)の設定**"を参照してください。（27ページ）

ブロードバンドルーターに複数のカメラが接続されている場合

IP に関する設定と、ポートに関する設定は別々に設定します。

例)

カテゴリ		カメラ #1	カメラ #2
IP 設定	IP アドレス Subnet Mask Gateway	192.168.1.100 255.255.255.0 192.168.1.1	192.168.1.101 255.255.255.0 192.168.1.1
ポート設定	HTTP ポート RTSP ポート	8080 554	8081 555

- <**HTTP Port**>が80以外に設定されている場合、カメラにアクセスするには、インターネットブラウザのアドレスバーで<**Port**>番号を設定する必要があります。
  例) http://IPアドレス: HTTPポート
  http://192.168.1.100:8080

5. [**適用**]ボタンをクリックしてください。
6. 成功確認メッセージが表示されたら、[**OK**]ボタンをクリックしてください。

ダイナミック IP を設定する

IP アドレスを DHCP で自動に割り当てられます。

- 動的IP環境の例
  - カメラに接続しているブロードバンドルーターが、DHCP サーバーで IP アドレスを割り当てられている場合
  - DHCP プロトコルを使用して直接カメラをモデムに接続する場合
  - IP が LAN 経由で内部 DHCP サーバーに割り当てられている場合

1. 検索リストでIP設定を変更するカメラをクリックしてください。
2. Device Managerのトップで<**IP割り当てる**>をクリックしてください。
3. <**IPアドレス自動割当(DHCP)**>を選択してください。
4. [**適用**]ボタンをクリックしてください。
5. 成功確認メッセージが表示されたら、[**OK**]ボタンをクリックしてください。

手動でカメラを登録する

検索機能でカメラを探せなかったり、外部ネットワークにカメラを接続した場合、IP 情報を手動で入力してリモートでカメラを探して登録することができます。

1. Device Managerのトップで<**デバイス追加**> - <**装備の手動登録**>をクリックしてください。
2. 検索するIPアドレス範囲を入力してください。
3. 登録するカメラの<**モデル名**>を選択してHTTPポート、ID、パスワードを入力してください。
4. [**登録**]ボタンをクリックしてください。
5. リストでカメラが登録されているか確認してください。
   - カメラに付着されたステッカーでMACアドレスを確認してください。

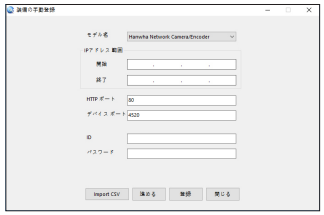

自動に IP を設定する

1. 検索リストでIPを自動に設定するカメラをクリックしてください。
2. Device Managerのトップで< + >をクリックしてください。
   - デバイス設定メニューが表示されます。
3. デバイス設定メニューで<**Auto IP Configure (IP自動設定)**>をクリックしてください。
4. [**閉じる**]ボタンをクリックしてください。

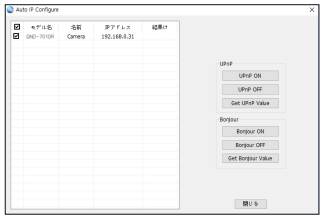

ートフォワード（ポートマッピング) の設定

カメラを接続したままブロードバンドルーターをインストールした場合は、ブロードバンドルーター上でポート範囲フォワードを設定し、ルーター内のカメラにリモート PC からアクセスできるようにする必要があります。

手動ポートフォワード

1. ブロードバンドルーターの設定メニューから<**Applications & Gaming**> - <**Port Range Forward**>を選択します。
   サードパーティのブロードバンドルーター用にポートフォワードを設定するには、ブロードバンドルーターのユーザーマニュアルを参照してください。
2. ブロードバンドルーターに接続されている各カメラ用の、<**TCP**>と<**UDP Port**>を選択します。
   IPルーターに設定する各ポートの数字は、カメラWeb Viewerの<**設定**> - <**Basic**> - <**IP & ポート**>に指定されるポート番号に合わせて設定しなければなりません。
3. 完了後、[**Save Settings**]をクリックします。
   設定が保存されます。

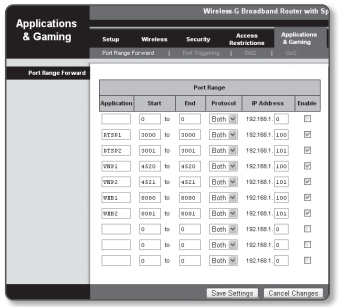

- ポートフォーワーディング設定の説明は、CISCO IPのルーターで設定した例示です。
- 設定は、接続しているブロードバンドルーターのモデルによって異なる場合があります。
  詳細は、該当するルーターのユーザーマニュアルを参照してください。

複数のネットワークカメラに関するポートフォワード範囲設定

- ブロードバンドルーターデバイスの設定Webページで、ポートフォワーディングのルールを設定することができます。
- ユーザーは、カメラ設定画面を使って各ポートを変更できます。

カメラ 1 とカメラ 2 がルーターに接続されている場合 :

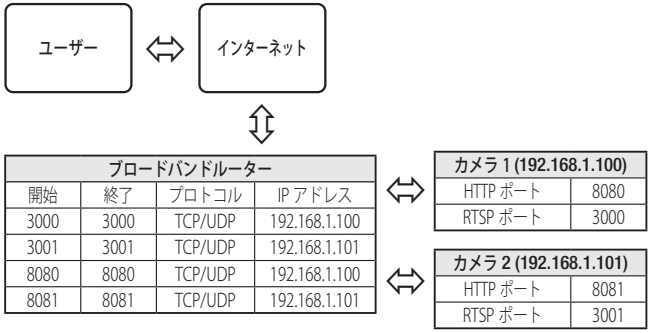

- ルータがUPnP（ユニバーサルプラグアンドプレイ）機能をサポートしている場合、ポートフォワーディングを追加ルータの設定なしで行うことができます。
  ネットワークカメラ接続後、メニューから、"**設定** -> **ネットワーク** -> DDNS"の<**DDNS**>の<**クイック接続**>のチェックボックスを選択します。

共有ローカル PC からカメラへの接続

1. Device Managerを起動してください。
   接続されているカメラをスキャンし、そのリストを表示します。
2. アクセスするカメラをダブルクリックします。
   インターネットブラウザが起動し、カメラに接続されます。

- インターネットブラウザのアドレスバーに検出されたカメラのIPアドレスを入力し、カメラにアクセスすることもできます。

リモート PC からインターネット経由でのカメラへの接続

IP ルーターのネットワーククラスター外部のリモートパソコンでは、ユーザーがカメラの DDNS URL を用いて IP ルーターのネットワーク内部にあるカメラにアクセスすることができます。

1. ブロードバンドルーターのネットワーク内のカメラへアクセスする前に、ブロードバンドルーターにポートフォワードを設定しておく必要があります。
2. リモートPCから、インターネットブラウザを起動しカメラのDDNS URLアドレスを入力するか、アドレスバーでブロードバンドルーターのIPアドレスを入力します。
   例）http://ddns.hanwha-security.com/ID

- DDNSを有効にするためには、DDNSのウェブサイト(http://ddns.hanwha-security.com)で会員登録をした後、[**My DDNS**]>[**製品登録**]で先に製品を登録する必要があります。

カメラへの接続

通常の方法

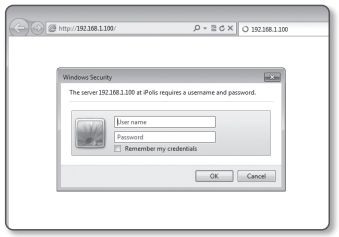

1. インターネットブラウザを起動します。
2. アドレスバーにカメラのIPアドレスを入力します。
   例) • IPアドレス(IPv4) : 192.168.1.100 ➞ http://192.168.1.100
   - ログインダイアログが表示されます。
   • IPアドレス(IPv6) : 2001:230:abcd: ffff:0000:0000:ffff:1111
   ➞ http://[2001:230:abcd:ffff:0000:0000:ffff:1111] - ログインダイアログが表示されます。

HTTP ポートが 80 以外の場合

1. インターネットブラウザを起動します。
2. アドレスバーにカメラのIPアドレスとHTTPのポート番号を入力します。
   例） IPアドレス : 192.168.1.100:HTTPのポート番号(8080)
   ➞ http://192.168.1.100:8080 - ログインダイアログが表示されます。

URL を使用する場合

1. インターネットブラウザを起動します。
2. アドレスバーにカメラのDDNS URLを入力します。
   例）URLアドレス : http://ddns.hanwha-security.com/ID
   - ログインダイアログが表示されます。

- ネットワーク接続はLANのみの環境では無効になります。

UPnP を介した接続

1. UPnPプロトコルをサポートするために、クライアント或いはオペレーティングシステムを実行します。
2. 検索するカメラ名をクリックします。
   Windowsオペレーティングシステムでは、ネットワークメニューから検索したカメラ名をクリックします。
   - ログインウィンドウが表示されます。

Bonjour を介した接続

1. Bonjourプロトコルをサポートするためにクライアント或いはオペレーティングシステムを実行します。
2. 検索するカメラ名をクリックします。
   Macのオペレーティングシステムでは、SafariのBonjourタブから検索したカメラ名をクリックします。
   - ログインウィンドウが表示されます。

DDNS アドレスを確認するには

カメラが直接 DHCP ケーブルモデム、DSL モデムまたは PPPoE モデムと接続している場合には、ISP（インターネットサービスプロバイダ）サーバーに接続するたびにネットワークの IP アドレスが変更されます。
その場合、DDNS による IP アドレスの変更は通知されません。

動的な IP ベースのデバイスを DDNS サーバーに登録すると、そのデバイスにアクセスするときに、変更された IP を簡単に確認することができます。
使用するデバイスを <**DDNS**> サーバーに登録するには、http://ddns.hanwha-security.com にアクセスして最初にデバイスを登録し、Web Viewer の < **ネットワーク** > - <**DDNS**> を <**DDNS**> に設定し、DDNS 登録に使用した < **製品 ID**> を指定します。

パスワード設定

本製品を初めて使用する場合、ログインパスワードを登録する必要があります。

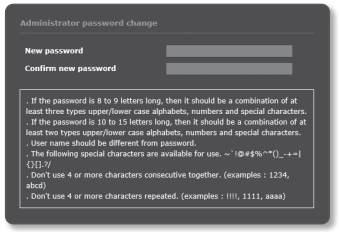

- 新しいパスワードが8～9桁の場合、以下のうち3種類以上を使用する必要があります：大文字/小文字、数字、特殊文字。パスワードが10～15桁の場合、2種類以上を使用する必要があります。
  - 認められている特別文字：~`!@#$%^*()_-+=|{}[].?/
- 安全性を高めるため、同じ文字を繰り返したり、キーボード上の連続した文字を入力したりするのはお勧めしません。
- パスワードをなくした場合、[RESET]を押して製品を初期化します。そのため、メモ帳を利用したり、記憶したりして、パスワードをなくさないようにしてください。

ログイン

カメラにアクセスするたびに、ログインウィンドウが表示されます。
ユーザー ID とパスワードを入力してカメラにアクセスします。

1. <**User name**>入力ボックスに"**admin**"と入力します。
   管理者ID"**admin**"は、確定されており変更できません。
2. <**Password**>入力欄に入力します。
3. [**OK**]をクリックします。
   正常にログインすると、Live Viewerの画面が表示されます。

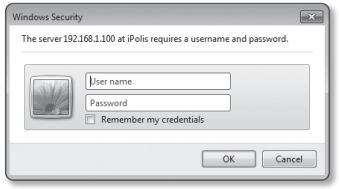

- カメラのWebビューアーにアクセスする場合は、画像データが暗号化されているか確認し、セキュリティに特にご注意ください。

- 入力完了時に、"**Remember my credentials**"オプションをチェックしておくと、次回からはログイン情報の入力を求められることなく自動的にログインします。
- 画面サイズが100%である場合、映像画質が最高の状態になります。倍率を小さくすると、境界線上の画像がカットされます。

カメラ・ウェブビューアーの設定

1. [**設定 (⚙)**]アイコンをクリックします。
2. 設定画面が現れます。
3. カメラの基本情報、ビデオ、オーディオ、ネットワーク、イベント、分析、ネットワーク全体のシステムの設定を構成することができます。
4. <**ヘルプ (ⓘ)**> をクリックして、それぞれの機能の詳細説明を表示します。

トラブルシューティング

問題	解決策
Safari を使用して HTTPS 経由でプラグインフリーの Web Viewer にアクセスすると、映像は表示されません。	• https 初回接続時に表示されるウェブサイトの認証ポップアップで < 証明書の表示 > をクリックした後、<Web ビューアの設定 IP に接続する際、常に信頼する > の項目のチェックボックスを選択してください。 • 以下のメッセージウィンドウで「次へ（Next）」を選択した後に Web Viewer での表示に失敗する場合、command キー + Q を押して Safari ブラウザを終了し、再度アクセスして上述の手順に従います。
ウェブブラウザからカメラにアクセスできない。	• カメラのネットワーク設定が適切か確認します。 • ネットワークケーブルがすべてきちんと接続されているか確認します。 • DHCP を使用して接続した場合、カメラが問題なく動的 IP アドレスを取得できたか確認します。 • カメラがブロードバンドルーターに接続している場合、ポート転送がきちんと 設定されているか確認します。
閲覧中にビューアが遮断された。	• カメラまたはネットワーク設定に変更が生じた場合、接続済みビューアは遮断されます。 • ネットワーク接続をすべて確認します。 • カメラが PPPoE 上で接続している場合、ネットワーク環境の不具合が原因でビューアが遮断された可能性があります。
新規で Web ビューアにアクセスしたり、クライアントにストリーミングを接続させたが、映像が出力されません。	• 使用可能なプロファイルの最大数は 3 つです。 4 つ以上のプロファイルを使用すると、接続が切断されることがあります。 例）MJPEG. H.264、H.265 接続後、別のプロファイルに接続時、接続切断
Device Manager プログラムでネットワークに接続されたカメラが検索できません。	• 使用中の PC のファイアウォールを無効にし、カメラを再検索してください。
画像がオーバーラップする。	• 複数のカメラが個々のアドレスではなく、単一のマルチキャスト アドレスに設定されているか確認します。 複数のカメラが単一アドレスを使用すると、画像がオーバーラップする原因になります。
画像が表示されない。	• 送信方法がマルチキャストに設定されている場合、カメラが接続している LAN にマルチキャストに対応しているルータがあるか確認します。

問題	解決策
< イベント > で < モーション感知 > を < 使用 > に設定した後、カメラでモーション感知イベントが発生しても、電子メールにファイルが転送されません。	• 設定を次の順序で確認します。 A. < 日付 & 時間 > 設定をチェックします。 B. < モーション感知 > が < 使用 > に設定されていることを確認します。 C. < イベント設定 > メニューの <E-mail> オプションが選択されて使用可能になっているかどうか確認してください。
Micro SD メモリカードに録画できません。	• メモリカードに問題がないか確認してください。
Micro SD メモリカードを挿入しても、カメラが正しく動作しません。	• メモリカードが正しい方向で挿入されているかを確認してください。 他のデバイスで初期化されたメモリカードの場合は、このカメラ装置で正常に動作しない可能性があります。 • メモリカードを < 設定 > → < イベント > → < ストレージ > メニューで再度初期化してください。
NAS に記録できません。	• NAS に登録した情報が正しいことを確認します。
NAS 設定が失敗したと報告が出ています。	• NAS の IP アドレスが有効であること。 • NAS の ID/ パスワードが有効であること。 • NAS の ID を使う基本フォルダに指定したフォルダにアクセスできること。 • NAS SMB/CIFS の項目をチェックしていないこと。 • NAS IP アドレスとカメラ IP アドレスが同じフォーマットであることを確認します。 例）NAS とカメラのサブネットマスク値は 255.255.255.0 です。 IP アドレスが 192.168.20.32 である場合、NAS IP アドレスは 192.168.20.1 ～ 192.168.20.255 の範囲にある必要があります。 • 保存または使用する基本フォルダを初期化せずに、別のユーザーとして利用しようとしていたかを確認します。 • 推奨されている NAS 装置を使用したかどうか確認します。

OPEN SOURCE ANNOUNCEMENT

GPL/LGPL software license

The software included in this product contains copyrighted software that is licensed under the GPL/LGPL. You may obtain the complete Corresponding Source code from us for a period of three years after our last shipment of this product by sending email to help.cctv@hanwha.com

If you want to obtain the complete Corresponding Source code in the physical medium such as CD-ROM, the cost of physically performing source distribution might be charged.

GPL SW

Component Name	License	URL
Base Kernel	GPL 2.0	
Busybox	GPL 2.0	http://www.busybox.net/downloads/snapshots
iproute2-4.3.0	GPL 2.0	
iptables-1.4.21	GPL 2.0	http://ftp.netfilter.org/pub/iptables
ethtool-4.2	GPL 2.0	
mtd-1.5.2	GPL 2.0	ftp://ftp.infradead.org/pub/mtd-utils
mii-diag-2.11	GPL 2.0	
rp-pppoe-3.11	GPL 2.0	http://www.roaringpenguin.com/pppoe/
wpa_supplicant-2.5	GPL 2.0	
bash-4.3.30	GPL 3.0	
zeroconf	GPL 2.0	

LGPL SW

Component Name	License	URL
gLibc	LGPL 2.0	
Inetutils	LGPL 3.0	
neon-0.29.6	LGPL 2.0	http://www.webdav.org/neon/

GNU GENERAL PUBLIC LICENSE

Version 2, June 1991

Copyright (C)1989, 1991 Free Software Foundation, Inc. 51 Franklin Street,Fifth Floor, Boston, MA 02110-1301, USA

Everyone is permitted to copy and distribute verbatim copies of this license document, but changing it is not allowed.

Preamble

The licenses for most software are designed to take away your freedom to share and change it. By contrast, the GNU General Public License is intended to guarantee your freedom to share and change free software-- to make sure the software is free for all its users. This General Public License applies to most of the Free Software Foundation's software and to any other program whose authors commit to using it. (Some other Free Software Foundation software is covered by the GNU Lesser General Public License instead.) You can apply it to your programs, too. When we speak of free software, we are referring to freedom, not price. Our General Public Licenses are designed to make sure that you have the freedom to distribute copies of free software (and charge for this service if you wish), that you receive source code or can get it if you want it, that you can change the software or use pieces of it in new free programs ; and that you know you can do these things.

To protect your rights, we need to make restrictions that forbid anyone to deny you these rights or to ask you to surrender the rights. These restrictions translate to certain responsibilities for you if you distribute copies of the software, or if you modify it.

For example, if you distribute copies of such a program, whether gratis or for a fee, you must give the recipients all the rights that you have.

You must make sure that they, too, receive or can get the source code. And you must show them these terms so they know their rights. We protect your rights with two steps :

(1)copyright the software, and (2)offer you this license which gives you legal permission to copy, distribute and/or modify the software. Also, for each author's protection and ours, we want to make certain that everyone understands that there is no warranty for this free software. If the software is modified by someone else and passed on, we want its recipients to know that what they have is not the original, so that any problems introduced by others will not reflect on the original authors' reputations.

Finally, any free program is threatened constantly by software patents. We wish to avoid the danger that redistributors of a free program will individually obtain patent licenses, in effect making the program proprietary. To prevent this, we have made it clear that any patent must be licensed for everyone's free use or not licensed at all. The precise terms and conditions for copying, distribution and modification follow.

TERMS AND CONDITIONS FOR COPYING, DISTRIBUTION AND MODIFICATION

Version 2, June 1991 Copyright (C) 1989, 1991 Free Software Foundation, Inc. 51 Franklin S

0. This License applies to any program or other work which contains a notice placed by the copyright holder saying it may be distributed under the terms of this General Public License.

The "Program", below, refers to any such program or work, and a "work based on the Program" means either the Program or any derivative work under copyright law : that is to say, a work containing the Program or a portion of it, either verbatim or with modifications and/or translated into another language. (Hereinafter, translation is included without limitation in the term "modification".) Each licensee is addressed as "you".
Activities other than copying, distribution and modification are not covered by this License ; they are outside its scope. The act of running the Program is not restricted, and the output from the Program is covered only if its contents constitute a work based on the Program (independent of having been made by running the Program). Whether that is true depends on what the Program does.

1. You may copy and distribute verbatim copies of the Program's source code as you receive it, in any medium, provided that you conspicuously and appropriately publish on each copy an appropriate copyright notice and disclaimer of warranty; keep intact all the notices that refer to this License and to the absence of any warranty ; and give any other recipients of the Program a copy of this License along with the Program.
You may charge a fee for the physical act of transferring a copy, and you may at your option offer warranty protection in exchange for a fee.

2. You may modify your copy or copies of the Program or any portion of it, thus forming a work based on the Program, and copy and distribute such modifications or work under the terms of Section 1 above, provided that you also meet all of these conditions :

a) You must cause the modified files to carry prominent notices stating that you changed the files and the date of any change.

b) You must cause any work that you distribute or publish, that in whole or in part contains or is derived from the Program or any part thereof, to be licensed as a whole at no charge to all third parties under the terms of this License.

c) If the modified program normally reads commands interactively when run,you must cause it, when started running for such interactive use in the most ordinary way, to print or display an announcement including an appropriate copyright notice and a notice that there is no warranty (or else, saying that you provide a warranty) and that users may redistribute the program under these conditions, and telling the user how to view a copy of this License. (Exception:if the Program itself is interactive but does not normally print such an announcement, your work based on the Program is not required to print an announcement.)

These requirements apply to the modified work as a whole. If identifiable sections of that work are not derived from the Program, and can be reasonably considered independent and separate works in themselves, then this License, and its terms, do not apply to those sections when you distribute them as separate works. But when you distribute the same sections as part of a whole which is a work based on the Program, the distribution of the whole must be on the terms of this License, whose permissions for other licensees extend to the entire whole, and thus to each and every part regardless of who wrote it.

Thus, it is not the intent of this section to claim rights or contest your rights to work written entirely by you ; rather, the intent is to exercise the right to control the distribution of derivative or collective works based on the Program. In addition, mere aggregation of another work not based on the Program with the Program (or with a work based on the Program)on a volume of a storage or distribution medium does not bring the other work under the scope of this License.

3. You may copy and distribute the Program (or a work based on it, under Section 2)in object code or executable form under the terms of Sections 1 and 2 above provided that you also do one of the following :

a) Accompany it with the complete corresponding machine-readable source code, which must be distributed under the terms of Sections 1 and 2 above on a medium customarily used for software interchange ; or,

b) Accompany it with a written offer, valid for at least three years, to give any third party, for a charge no more than your cost of physically performing source distribution, a complete machinereadable copy of the corresponding source code, to be distributed under the terms of Sections 1 and 2 above on a medium customarily used for software interchange ; or,

c) Accompany it with the information you received as to the offer to distribute corresponding source code. (This alternative is allowed only for noncommercial distribution and only if you received the program in object code or executable form with such an offer, in accord with Subsection b above.) The source code for a work means the preferred form of the work for making modifications to it. For an executable work, complete source code means all the source code for all modules it contains, plus any associated interface definition files, plus the scripts used to control compilation and installation of the executable. However, as a special exception, the source code distributed need not include anything that is normally distributed (in either source or binary form) with the major

components (compiler, kernel, and so on) of the operating system on which the executable runs, unless that component itself accompanies the executable. If distribution of executable or object code is made by offering access to copy from a designated place, then offering equivalent access to copy the source code from the same place counts as distribution of the source code, even though third parties are not compelled to copy the source along with the object code.

4. You may not copy, modify, sublicense, or distribute the Program except as expressly provided under this License. Any attempt otherwise to copy, modify, sublicense or distribute the Program is void, and will automatically terminate your rights under this License.

However, parties who have received copies, or rights, from you under this License will not have their licenses terminatedso long as such parties remain in full compliance.

5. You are not required to accept this License, since you have not signed it. However, nothing else grants you permission to modify or distribute the Program or its derivative works.

These actions are prohibited by law if you do not accept this License.Therefore, by modifying or distributing the Program (or any work based on the Program), you indicate your acceptance of this License to do so, and all its terms and conditions for copying, distributing or modifying the Program or works based on it.

6. Each time you redistribute the Program (or any work based on the Program), the recipient automatically receives a license from the original licensor to copy, distribute or modify the Program subject to these terms and conditions. You may not impose any further restrictions on the recipients' exercise of the rights granted herein. You are not responsible for enforcing compliance by third parties to this License.

7. If, as a consequence of a court judgment or allegation of patent infringement or for any other reason (not limited to patent issues), conditions are imposed on you (whether by court order, agreement or otherwise)that contradict the conditions of this License, they do not excuse you from the conditions of this License. If you cannot distribute so as to satisfy simultaneously your obligations under this License and any other pertinent obligations, then as a consequence you may not distribute the Program at all.

For example, if a patent license would not permit royaltyfree redistribution of the Program by all those who receive copies directly or indirectly through you, then the only way you could satisfy both it and this License would be to refrain entirely from distribution of the Program.

If any portion of this section is held invalid or unenforceable under any particular circumstance, the balance of the section is intended to apply and the section as a whole is intended to apply in other circumstances. It is not the purpose of this section to induce you to infringe any patents or other property right claims or to contest validity of any such claims; this section has the sole purpose of protecting the integrity of the free software distribution system, which is implemented by public license practices. Many people have made generous contributions to the wide range of software distributed through that system in reliance on consistent application of that system ; it is up to the author/donor to decide if he or she is willing to distribute software through any other system and a licensee cannot impose that choice. This section is intended to make thoroughly clear what is believed to be a consequence of the rest of this License.

8. If the distribution and/or use of the Program is restricted in certain countries either by patents or by copyrighted interfaces, the original copyright holder who places the Program under this License may add an explicit geographical distribution limitation excluding those countries,so that distribution is permitted only in or among countries not thus excluded. In such case, this License incorporates the limitation as if written in the body of this License.

9. The Free Software Foundation may publish revised and/or new versions of the General Public License from time to time. Such new versions will be similar in spirit to the present version, but may differ in detail to address new problems or concerns. Each version is given a distinguishing version number. If the Program specifies a version number of this License which applies to it and "any later version", you have the option of following the terms and conditions either of that version or of any later version published by the Free Software Foundation. If the Program does not specify a version number of this License, you may choose any version ever published by the Free Software Foundation.

10. If you wish to incorporate parts of the Program into other free programs whose distribution conditions are different, write to the author to ask for permission. For software which is copyrighted by the Free Software Foundation,write to the Free Software Foundation ; we sometimes make exceptions for this. Our decision will be guided by the two goals of preserving the free status of all derivatives of our free software and of promoting the sharing and reuse of software generally.

NO WARRANTY

11. BECAUSE THE PROGRAM IS LICENSED FREE OF CHARGE, THERE IS NO WARRANTY FOR THE PROGRAM, TO THE EXTENT PERMITTED BY APPLICABLE LAW. EXCEPT WHEN OTHERWISE STATED IN WRITING THE COPYRIGHT HOLDERS AND/OR OTHER PARTIES PROVIDE THE PROGRAM "ASIS" WITHOUT WARRANTY OF ANY KIND, EITHER EXPRESSED OR IMPLIED, INCLUDING, BUT NOT LIMITED TO, THE IMPLIED WARRANTIES OF MERCHANTABILITY AND FITNESS FOR A PARTICULAR PURPOSE. THE ENTIRE RISK AS TO THE QUALITY AND PERFORMANCE OF THE PROGRAM IS WITH YOU. SHOULD THE PROGRAMPROVE DEFECTIVE, YOU ASSUME THE COST OF ALL NECESSARY SERVICING, REPAIR OR CORRECTION.

12. IN NO EVENT UNLESS REQUIRED BY APPLICABLE LAW OR AGREED TO IN WRITING WILL ANY COPYRIGHT HOLDER, OR ANY OTHER PARTY WHO MAY MODIFY AND/OR REDISTRIBUTE DAMAGES, INCLUDING ANY GENERAL, SPECIAL, INCIDENTAL OR CONSEQUENTIAL DAMAGES ARISING OUT OF THE USE OR INABILITY TO USE THE PROGRAM (INCLUDING BUT NOT LIMITED TO LOSS OF DATA OR DATA BEING RENDERED INACCURATE OR LOSSES SUSTAINED BY YOU OR THIRD PARTIES OR A FAILURE OF THE PROGRAM TO OPERATE WITH ANY OTHER PROGRAMS), EVEN IF SUCH HOLDER OR OTHER PARTY HAS BEEN ADVISED OF THE POSSIBILITY OF SUCH DAMAGES.

END OF TERMS AND CONDITIONS

How to Apply These Terms to Your New Programs If you develop a new program, and you want it to be of the greatest possible use to the public, the best way to achieve this is to make it free software which everyone can redistribute and change under these terms. To do so, attach the following notices to the program. It is safest to attach them to the start of each source file to most effectively convey the exclusion of warranty ; and each file should have at least the "copyright" line and a pointer to where the full notice is found.one line to give the program's name and an idea of what it does.

Copyright (C)yyyy name of author

This program is free software ; you can redistribute it and/or modify it under the terms of the GNU General Public License as published by the Free Software Foundation ; either version 2 of the License, or (at your option)any later version.

This program is distributed in the hope that it will be useful, but WITHOUT ANY WARRANTY ; without even the implied warranty of MERCHANTABILITY or FITNESS FOR A PARTICULAR PURPOSE. See the GNU General Public License for more details.

You should have received a copy of the GNU General Public License along with this program ; if not, write to the Free Software Foundation, Inc.,51 Franklin Street, Fifth Floor, Boston, MA 02110-1301, USA.
Also add information on how to contact you by electronic and paper mail. If the program is interactive, make it output a short notice like this when it starts in an interactive mode :

Gnomovision version 69, Copyright (C) year name of author Gnomovision comes with ABSOLUTELY NO WARRANTY ; for details type 'show w'. This is free software, and you are welcome to redistribute it under certain conditions ; type 'show c' for details.

The hypothetical commands 'show w' and 'show c' should show the appropriate parts of the General Public License. Of course, the commands you use may be called something other than 'show w' and 'show c' ; they could even be mouse-clicks or menu items-- whatever suits your program.

You should also get your employer (if you work as a programmer)or your school, if any, to sign a "copyright disclaimer" for the program,if necessary. Here is a sample ; alter the names:

Yoyodyne, Inc.,hereby disclaims all copyright interest in the program 'Gnomovision' (which makes passes at compilers) written by James Hacker. signature of Ty Coon, 1 April 1989 Ty Coon, President of Vice This General Public License does not permit incorporating your program into proprietary programs. If your program is a subroutine library, you may consider it more useful to permit linking proprietary applications with the library. If this is Lwihcaetn ysoeu want to do, use the GNU Lesser General Public instead of this License.

GNU GENERAL PUBLIC LICENSE

Version 3, 29 June 2007

Copyright (C) 2007 Free Software Foundation, Inc. <http://fsf.org/>

Everyone is permitted to copy and distribute verbatim copies of this license document, but changing it is not allowed.

Preamble

The GNU General Public License is a free, copyleft license for software and other kinds of works. The licenses for most software and other practical works are designed to take away your freedom to share and change the works. By contrast, the GNU General Public License is intended to guarantee your freedom to share and change all versions of a program-- to make sure it remains free software for all its users.

We, the Free Software Foundation, use the GNU General Public License for most of our software; it applies also to any other work released this way by its authors.

You can apply it to your programs, too. When we speak of free software, we are referring to freedom, not price. Our General Public Licenses are designed to make sure that you have the freedom to distribute copies of free software (and charge for them if you wish), that you receive source code or can get it if you want it, that you can change the software or use pieces of it in new free programs, and that you know you can do these things.

To protect your rights, we need to prevent others from denying you these rights or asking you to surrender the rights. Therefore, you have certain responsibilities if you distribute copies of the software, or if you modify it: responsibilities to respect the freedom of others. For example, if you distribute copies of such a program, whether gratis or for a fee, you must pass on to the recipients the same freedoms that you received. You must make sure that they, too, receive or can get the source code. And you must show them these terms so they know their rights. Developers that use the GNU GPL protect your rights with two steps: (1) assert copyright on the software, and (2) offer you this License giving you legal permission to copy, distribute and/or modify it. For the developers' and authors' protection, the GPL clearly explains that there is no arranty for this free software. For both users' and authors' sake, the GPL requires that modified versions be marked as changed, so that their problems will not be attributed erroneously to authors of previous versions. Some devices are designed to deny users access to install or run modified versions of the software inside them, although the manufacturer can do so. This is fundamentally incompatible with the aim of protecting users' freedom to change the software. The systematic pattern of such abuse occurs in the area of products for individuals to use, which is precisely where it is most unacceptable. Therefore, we have designed this version of the GPL to prohibit the practice for those products. If such problems arise substantially in other domains, we stand ready to extend this provision to those domains in future versions of the GPL, as needed to protect the freedom of users.

Finally, every program is threatened constantly by software patents. States should not allow patents to restrict development and use of software on general-purpose omputers, but in those that do, we wish to avoid the special anger that patents applied to a free program could make it ffectively proprietary. To prevent this, the GPL assures that atents cannot be used to render the program non-free. he precise terms and conditions for copying, distribution and modification follow.

TERMS AND CONDITIONS

0. Definitions.

"This License" refers to version 3 of the GNU General Public License.
Copyright" also means copyright-like laws that apply to other kinds of works, such as semiconductor masks. "The Program" refers to any copyrightable work licensed under this License. Each licensee is addressed as "you". "Licensees" and "recipients" may be individuals or organizations.

To "modify" a work means to copy from or adapt all or part of the work in a fashion requiring copyright permission, other than the making of an exact copy. The resulting work is called a "modified version" of the earlier work or a work "based on" the earlier work.

A "covered work" means either the unmodified Program or a work based on the Program.

To "propagate" a work means to do anything with it that, without permission, would make you directly or secondarily liable for infringement under applicable copyright law, except executing it on a computer or modifying a private copy.

Propagation includes copying, distribution (with or without modification), making available to the public, and in some countries other activities as well.

To "convey" a work means any kind of propagation that enables other parties to make or receive copies. Mere interaction with a user through a computer network, with no transfer of a copy, is not conveying. An interactive user interface displays "Appropriate Legal Notices" to the extent that it includes a convenient and prominently visible feature that (1) displays an appropriate copyright notice, and (2) tells the user that there is no warranty for the work (except to the extent that warranties are provided), that licensees may convey the work under this License, and how to view a copy of this License. If the interface presents a list of user commands or options, such as a menu, a prominent item in the list meets this criterion.

1. Source Code.

The "source code" for a work means the preferred form of the work for making modifications to it. "Object code" means any non-source form of a work.

A "Standard Interface" means an interface that either is an official standard defined by a recognized standards body, or, in the case of interfaces specified for a particular programming language, one that is widely used among developers working in that language.

The "System Libraries" of an executable work include anything, other than the work as a whole, that (a) is included in the normal form of packaging a Major Component, but which is not part of that Major Component, and (b) serves only to enable use of the work with that Major Component, or to implement a Standard Interface for which an implementation is available to the public in source code form. A "Major Component", in this context, means a major essential component (kernel, window system, and so on) of the specific operating system (if any) on which the executable work runs, or a compiler used to produce the work, or an object code interpreter used to run it.

The "Corresponding Source" for a work in object code form means all the source code needed to generate, install, and (for an executable work) run the object code and to modify the work, including scripts to control those activities.

However, it does not include the work's System Libraries, or generalpurpose tools or generally available free programs which are used unmodified in performing those activities but which are not part of the work. For example, Corresponding Source includes interface definition files associated with source files for the work, and the source code for shared libraries and dynamically linked subprograms that the work is specifically designed to require, such as by intimate data communication or control flow between those subprograms and other parts of the work.

The Corresponding Source need not include anything that users can regenerate automatically from other parts of the Corresponding Source. The Corresponding Source for a work in source code form is that same work.

2. Basic Permissions.

All rights granted under this License are granted for the term of copyright on the Program, and are irrevocable provided the stated conditions are met. This License explicitly affirms your unlimited permission to run the unmodified Program. The output from running a covered work is covered by this License only if the output, given its content, constitutes a covered work. This License acknowledges your rights of fair use or other equivalent, as provided by copyright law.

You may make, run and propagate covered works that you do not convey, without conditions so long as your license otherwise remains in force. You may convey covered works to others for the sole purpose of having them make modifications exclusively for you, or provide you with facilities for running those works, provided that you comply with the terms of this License in conveying all material for which you do not control copyright. Those thus making or running the covered works for you must do so exclusively on your behalf, under your direction and control, on terms that prohibit them from making any copies of your copyrighted material outside their relationship with you. Conveying under any other circumstances is permitted solely under the conditions stated below. Sublicensing is not allowed; section 10 makes it unnecessary.

3. Protecting Users' Legal Rights From anti-Circumvention Law.

No covered work shall be deemed part of an effective technological measure under any applicable law fulfilling obligations under article 11 of the WIPO copyright treaty adopted on 20 December 1996, or similar laws prohibiting or restricting circumvention of such measures.

When you convey a covered work, you waive any legal power to forbid circumvention of technological measures to the extent such circumvention is effected by exercising rights under this License with respect to the covered work, and you disclaim any intention to limit operation or modification of the work as a means of enforcing, against the work's users, your or third parties' legal rights to forbid circumvention of technological measures.

4. Conveying Verbatim Copies.

You may convey verbatim copies of the Program's source code as you receive it, in any medium, provided that you conspicuously and appropriately publish on each copy an appropriate copyright notice; keep intact all notices stating that this License and any non-permissive terms added in accord with section 7 apply to the code; keep intact all notices of the absence of any warranty; and give all recipients a copy of this License along with the Program. You may charge any price or no price for each copy that you convey, and you may offer support or warranty protection for a fee.

5. Conveying Modified Source Versions.

You may convey a work based on the Program, or the modifications to produce it from the Program, in the form of source code under the terms of section 4, provided that you also meet all of these conditions:

a) The work must carry prominent notices stating that you modified it, and giving a relevant date.

b) The work must carry prominent notices stating that it is released under this License and any conditions added under section 7. This requirement modifies the requirement in section 4 to "keep intact all notices".

c) You must license the entire work, as a whole, under this License to anyone who comes into possession of a copy. This License will therefore apply, along with any applicable section 7 additional terms, to the whole of the work, and all its parts, regardless of how they are packaged. This License gives no permission to license the work in any other way, but it does not invalidate such permission if you have separately received it.

d) If the work has interactive user interfaces, each must display Appropriate Legal Notices; however, if the Program has interactive interfaces that do not display Appropriate Legal Notices, your work need not make them do so. A compilation of a covered work with other separate and independent works, which are not by their nature extensions of the covered work, and which are not combined with it such as to form a larger program, in or on a volume of a storage or distribution medium, is called an "aggregate" if the compilation and its resulting copyright are not used to limit the access or legal rights of the compilation's users beyond what the individual works permit. Inclusion of a covered work in an aggregate does not cause this License to apply to the other parts of the aggregate.

6. Conveying Non-Source Forms.

You may convey a covered work in object code form under the terms of sections 4 and 5, provided that you also convey the machine-readable Corresponding Source under the terms of this License, in one of these ways:

a) Convey the object code in, or embodied in, a physical product (including a physical distribution medium), accompanied by the Corresponding Source fixed on a durable physical medium customarily used for software interchange.

b) Convey the object code in, or embodied in, a physical product (including a physical distribution medium), accompanied by a written offer, valid for at least three years and valid for as long as you offer spare parts or customer support for that product model, to give anyone who possesses the object code either (1) a copy of the Corresponding Source for all the software in the product that is covered by this License, on a durable physical medium customarily used for software interchange, for a price no more than your reasonable cost of physically performing this conveying of source, or (2) access to copy the Corresponding Source from a network server at no charge.

c) Convey individual copies of the object code with a copy of the written offer to provide the corresponding Source. This alternative is allowed only occasionally and noncommercially, and only if you received the object code with such an offer, in accord with subsection 6b.

d) Convey the object code by offering access from a designated place (gratis or for a charge), and offer equivalent access to the Corresponding Source in the same way through the same place at no further charge. You need not require recipients to copy the Corresponding Source along with the object code. If the place to copy the object code is a network server, the Corresponding Source may be on a different server (operated by you or a third party) that supports equivalent copying facilities, provided you maintain clear directions next to the object code saying where to find the Corresponding Source. Regardless of what server hosts the Corresponding Source, you remain obligated to ensure that it is available for as long as needed to satisfy these requirements.

e) Convey the object code using peer-to-peer transmission, provided you inform other peers where the object code and Corresponding Source of the work are being offered to the general public at no charge under subsection 6d. A separable portion of the object code, whose source code is excluded from the Corresponding Source as a System Library, need not be included in conveying the object code work. A "User Product" is either (1) a "consumer product", which means any tangible personal property which is normally used for personal, family, or household purposes, or (2) anything designed or sold for incorporation into a dwelling. In determining whether a product is a consumer product, doubtful cases shall be resolved in favor of coverage. For a particular product received by a particular user, "normally used" refers to a typical or common use of that class of product, regardless of the status of the particular user or of the way in which the particular user actually uses, or expects or is expected to use, the product. A product is a consumer product regardless of whether the product has substantial commercial, industrial or non-consumer uses, unless such uses represent the only significant mode of use of the product.

"Installation Information" for a User Product means any methods, procedures, authorization keys, or other information required to install and execute modified versions of a covered work in that User Product from a modified version of its Corresponding Source. The information must suffice to ensure that the continued functioning of the modified object code is in no case prevented or interfered with solely because modification has been made. If you convey an object code work under this section in, or with, or specifically for use in, a User Product, and the conveying occurs as part of a transaction in which the right of possession and use of the User Product is transferred to the recipient in perpetuity or for a fixed term (regardless of how the transaction is characterized), the Corresponding Source conveyed under this section must be accompanied by the Installation Information. But this requirement does not apply if neither you nor any third party retains the ability to install modified object code on the User Product (for example, the work has been installed in ROM).

The requirement to provide Installation Information does not include a requirement to continue to provide support service, warranty, or updates for a work that has been modified or installed by the recipient, or for the User Product in which it has been modified or installed. Access to a network may be denied when the modification itself materially and adversely affects the operation of the network or violates the rules and protocols for communication across the network. Corresponding Source conveyed, and Installation Information provided, in accord with this section must be in a format that is publicly documented (and with an implementation available to the public in source code form), and must require no special password or key for unpacking, reading or copying.

7. Additional Terms.

"Additional permissions" are terms that supplement the terms of this License by making exceptions from one or more of its conditions. Additional permissions that are applicable to the entire Program shall be treated as though they were included in this License, to the extent that they are valid under applicable law. If additional permissions apply only to part of the Program, that part may be used separately under those permissions, but the entire Program remains governed by this License without regard to the additional permissions. When you convey a copy of a covered work, you may at your option remove any additional permissions from that copy, or from any part of it. (Additional permissions may be written to require their own removal in certain cases when you modify the work.) You may place additional permissions on material, added by you to a covered work, for which you have or can give appropriate copyright permission. Notwithstanding any other provision of this License, for material you add to a covered work, you may (if authorized by the copyright holders of that material) supplement the terms of this License with terms:

a) Disclaiming warranty or limiting liability differently from the terms of sections 15 and 16 of this License; or

b) Requiring preservation of specified reasonable legal notices or author attributions in that material or in the Appropriate Legal Notices displayed by works containing it; or

c) Prohibiting misrepresentation of the origin of that material, or requiring that modified versions of such material be marked in reasonable ways as different from the original version; or

d) Limiting the use for publicity purposes of names of licensors or authors of the material; or

e) Declining to grant rights under trademark law for use of some trade names, trademarks, or service marks; or

f) Requiring indemnification of licensors and authors of that material by anyone who conveys the material (or modified versions of it) with contractual assumptions of liability to the recipient, for any liability that these contractual assumptions directly impose on those licensors and authors. All other non-permissive additional terms are considered "further restrictions" within the meaning of section 10. If the Program as you received it, or any part of it, contains a notice stating that it is governed by this License along with a term that is a further restriction, you may remove that term. If a license document contains a further restriction but permits relicensing or conveying under this License, you may add to a covered work material governed by the terms of that license document, provided that the further restriction does not survive such relicensing or conveying. If you add terms to a covered work in accord with this section, you must place, in the relevant source files, a statement of the additional terms that apply to those files, or a notice indicating where to find the applicable terms. Additional terms, permissive or non-permissive, may be stated in the form of a separately written license, or stated as exceptions; the above requirements apply either way.

8. Termination.

You may not propagate or modify a covered work except as expressly provided under this License. Any attempt otherwise to propagate or modify it is void, and will automatically terminate your rights under this License (including any patent licenses granted under the third paragraph of section 11).

However, if you cease all violation of this License, then your license from a particular copyright holder is reinstated (a) provisionally, unless and until the copyright holder explicitly and finally terminates your license, and (b) permanently, if the copyright holder fails to notify you of the violation by some reasonable means prior to 60 days after the cessation. Moreover, your license from a particular copyright holder is reinstated permanently if the copyright holder notifies you ofthe violation by some reasonable means, this is the first time you have received notice of violation of this License (for any work) from that copyright holder, and you cure the violation prior to 30 days after your receipt of the notice. Termination of your rights under this section does not terminate the licenses of parties who have received copies or rights from you under this License. If your rights have been terminated and not permanently reinstated, you do not qualify to receive new licenses for the same material under section 10.

9. Acceptance Not Required for Having Copies.

You are not required to accept this License in order to receive or run a copy of the Program. Ancillary propagation of a covered work occurring solely as a consequence of using peer-to-peer transmission to receive a copy likewise does not require acceptance. However, nothing other than this License grants you permission to propagate or modify any covered work. These actions infringe copyright if you do not accept this License. Therefore, by modifying or propagating a covered work, you indicate your acceptance of this License to do so.

10. Automatic Licensing of Downstream Recipients.

Each time you convey a covered work, the recipient automatically receives a license from the original licensors, to run, modify and propagate that work, subject to this License. You are not responsible for enforcing compliance by third parties with this License. An "entity transaction" is a transaction transferring control of an organization, or substantially all assets of one, or subdividing an organization, or merging organizations. If propagation of a covered work results from an entity transaction, each party to that transaction who receives a copy of the work also receives whatever licenses to the work the party's predecessor in interest had or could give under the previous paragraph, plus a right to possession of the Corresponding Source of the work from the predecessor in interest, if the predecessor has it or can get it with reasonable efforts. You may not impose any further restrictions on the exercise of the rights granted or affirmed under this License. For example, you may not impose a license fee, royalty, or other charge for exercise of rights granted under this License, and you may not initiate litigation (including a cross-claim or counterclaim in a lawsuit) alleging that any patent claim is infringed by making, using, selling, offering for sale, or importing the Program or any portion of it.

11. Patents.

A "contributor" is a copyright holder who authorizes use under this License of the Program or a work on which the Program is based. The work thus licensed is called the contributor's "contributor version". A contributor's "essential patent claims" are all patent claims owned or controlled by the contributor, whether already acquired or hereafter acquired, that would be infringed by some manner, permitted by this License, of making, using, or selling its contributor version, but do not include claims that would be infringed only as a consequence of further modification of the contributor version. For purposes of this definition, "control" includes the right to grant patent sublicenses in a manner consistent with the requirements of this License. Each contributor grants you a non-exclusive, worldwide, royaltyfree patent license under the contributor's essential patent claims, to make, use, sell, offer for sale, import and otherwise run, modify and propagate the contents of its contributor version.

In the following three paragraphs, a "patent license" is any express agreement or commitment, however denominated, not to enforce a patent (such as an express permission to practice a patent or covenant not to sue for patent infringement). To "grant" such a patent license to a party means to make such an agreement or commitment not to enforce a patent against the party. If you convey a covered work, knowingly relying on a patent license, and the Corresponding Source of the work is not available for anyone to copy, free of charge and under the terms of this License, through a publicly available network server or other readily accessible means, then you must either (1) cause the Corresponding Source to be so available, or (2) arrange to deprive yourself of the benefit of the patent license for this particular work, or (3) arrange, in a manner consistent with the requirements of this License, to extend the patent license to downstream recipients. "Knowingly relying" means you have actual knowledge that, but for the patent license, your conveying the covered work in a country, or your recipient's use of the covered work in a country, would infringe one or more identifiable patents in that country that you have reason to believe are valid. If, pursuant to or in connection with a single transaction or arrangement, you convey, or propagate by procuring conveyance of, a covered work, and grant a

patent license to some of the parties receiving the covered work authorizing them to use, propagate, modify or convey a specific copy of the covered work, then the patent license you grant is automatically extended to all recipients of the covered work and works based on it. A patent license is "discriminatory" if it does not include within the scope of its coverage, prohibits the exercise of, or is conditioned on the non-exercise of one or more of the rights that are specifically granted under this License. You may not convey a covered work if you are a party to an arrangement with a third party that is in the business of distributing software, under which you make payment to the third party based on the extent of your activity of conveying the work, and under which the third party grants, to any of the parties who would receive the covered work from you, a discriminatory patent license

(a) in connection with copies of the covered work conveyedby you (or copies made from those copies), or

(b) primarily for and in connection with specific products or compilations that contain the covered work, unless you entered into that arrangement, or that patent license was granted, prior to 28 March 2007. Nothing in this License shall be construed as excluding or limiting any implied license or other defenses to infringement that may otherwise be available to you under applicable patent law.

12. No Surrender of Others' Freedom.

If conditions are imposed on you (whether by court order, agreement or otherwise) that contradict the conditions of this License, they do not excuse you from the conditions of thisLicense. If you cannot convey a covered work so as to satisfy simultaneously your obligations under this License and any other pertinent obligations, then as a consequence you may not convey it at all. For example, if you agree to terms that obligate you to collect a royalty for further conveying from those to whom you convey the Program, the only way you could satisfy both those terms and this License would be to refrain entirely from conveying the Program.

13. Use with the GNU Affero General Public License.

Notwithstanding any other provision of this License, you have permission to link or combine any covered work with a work licensed under version 3 of the GNU Affero General Public License into a single combined work, and to convey the resulting work. The terms of this License will continue to apply to the part which is the covered work, but the special requirements of the GNU Affero General Public License, section 13, concerning interaction through a network will apply to the combination as such.

14. Revised Versions of this License.

The Free Software Foundation may publish revised and/ or new versions of the GNU General Public License from time to time. Such new versions will be similar in spirit to the present version, but may differ in detail to address new problems or concerns.

Each version is given a distinguishing version number. If the Program specifies that a certain numbered version of the GNU General Public License "or any later version" applies to it, you have the option of following the terms and conditions either of that numbered version or of any later version published by the Free Software Foundation. If the Program does not specify a version number of the GNU General Public License, you may choose any version ever published by the Free Software Foundation. If the Program specifies that a proxy can decide which future versions of the GNU General Public License can be used, that proxy's public statement of acceptance of a version permanently authorizes you to choose that version for the Program. Later license versions may give you additional or different permissions. However, no additional obligations are imposed on any author or copyright holder as a result of your choosing to follow a later version.

15. Disclaimer of Warranty.

THERE IS NO WARRANTY FOR THE PROGRAM, TO THE EXTENT PERMITTED BY APPLICABLE LAW. EXCEPT WHEN OTHERWISE STATED IN WRITING THE COPYRIGHT HOLDERS AND/OR OTHER PARTIES PROVIDE THE PROGRAM "AS IS" WITHOUT WARRANTY OF ANY KIND, EITHER EXPRESSED OR IMPLIED, INCLUDING, BUT NOT LIMITED TO, THE IMPLIED WARRANTIES OF MERCHANTABILITY AND FITNESS FOR A PARTICULAR PURPOSE. THE ENTIRE RISK AS TO THE QUALITY AND PERFORMANCE OF THE PROGRAM IS WITH YOU. SHOULD THE PROGRAM PROVE DEFECTIVE, YOU ASSUME THE COST OF ALL NECESSARY SERVICING, REPAIR OR CORRECTION.

16. Limitation of Liability.

IN NO EVENT UNLESS REQUIRED BY APPLICABLE LAW OR AGREED TO IN WRITING WILL ANY COPYRIGHT HOLDER, OR ANY OTHER PARTY WHO MODIFIES AND/OR CONVEYS THE PROGRAM AS PERMITTED ABOVE, BE LIABLE TO YOU FOR DAMAGES, INCLUDING ANY GENERAL, SPECIAL, INCIDENTAL OR CONSEQUENTIAL DAMAGES ARISING OUT OF THE USE OR INABILITY TO USE THE PROGRAM (INCLUDING BUT NOT LIMITED TO LOSS OF DATA OR DATA BEING RENDERED INACCURATE OR LOSSES SUSTAINED BY YOU OR THIRD PARTIES OR A FAILURE OF THE PROGRAM TO OPERATE WITH ANY OTHER PROGRAMS), EVEN IF SUCH HOLDER OR OTHER PARTY HAS BEEN ADVISED OF THE POSSIBILITY OF SUCH DAMAGES.

17. Interpretation of Sections 15 and 16.

If the disclaimer of warranty and limitation of liability provided above cannot be given local legal effect according to their terms, reviewing courts shall apply local law that most closely approximates an absolute waiver of all civil liability in connection with the Program, unless a warranty or assumption of liability accompanies a copy of the Program in return for a fee.

OpenSSL Combined License

The OpenSSL toolkit stays under a dual license, i.e. both the conditions of the OpenSSL License and the original SSLeay license apply to the toolkit.

See below for the actual license texts. Actually both licenses are BSD-style Open Source licenses. In case of any license issues related to OpenSSL please contact openssl-core@openssl.org.

Component Name	License	URL
openssl-1.0.2e	OpenSSL	Combined License http://www.openssl.org/source

Copyright (c) 1998-2011 The OpenSSL Project. All rights reserved.

Redistribution and use in source and binary forms, with or without modification, are permitted provided that the following conditions are met:

1. Redistributions of source code must retain the above copyright notice, this list of conditions and the following disclaimer.

2. Redistributions in binary form must reproduce the above copyright notice, this list of conditions and the following disclaimer in the documentation and/or other materials provided with the distribution.

3. All advertising materials mentioning features or use of this software must display the following acknowledgment: "This product includes software developed by the OpenSSL Projectfor use in the OpenSSL Toolkit. (http://www.openssl.org/)"

4. The names "OpenSSL Toolkit" and "OpenSSL Project" must not be used to endorse or promote products derived from this software without prior written permission. For written permission, please contact openssl-core@openssl.org.

5. Products derived from this software may not be called "OpenSSL" nor may "OpenSSL" appear in their names without prior written permission of the OpenSSL Project.

6. Redistributions of any form whatsoever must retain the following acknowledgment: "This product includes software developed by the OpenSSL Project for use in the OpenSSL Toolkit (http://www.openssl.org/)"

THIS SOFTWARE IS PROVIDED BY THE OpenSSL PROJECT ``AS IS'' AND ANY EXPRESSED OR IMPLIED WARRANTIES, INCLUDING, BUT NOT LIMITED TO, THE IMPLIED WARRANTIES OF MERCHANTABILITY AND FITNESS FOR A PARTICULAR PURPOSE ARE DISCLAIMED. IN NO EVENT SHALL THE OpenSSL PROJECT OR ITS CONTRIBUTORS BE LIABLE FOR ANY DIRECT, INDIRECT, INCIDENTAL, SPECIAL, EXEMPLARY, OR CONSEQUENTIAL DAMAGES (INCLUDING, BUT NOT LIMITED TO, PROCUREMENT OF SUBSTITUTE GOODS OR SERVICES; LOSS OF USE, DATA, OR PROFITS; OR BUSINESS INTERRUPTION) HOWEVER CAUSED AND ON ANY THEORY OF LIABILITY, WHETHER IN CONTRACT, STRICT LIABILITY, OR TORT (INCLUDING NEGLIGENCE OR OTHERWISE) ARISING IN ANY WAY OUT OF THE USE OF THIS SOFTWARE, EVEN IF ADVISED OF THE POSSIBILITY OF SUCH DAMAGE.

This product includes cryptographic software written by Eric Young(eay@cryptsoft.com). This product includes software written by Tim Hudson (tjh@cryptsoft.com).

Original SSLeay License

Copyright (C) 1995-1998 Eric Young (eay@cryptsoft.com) All rights reserved.

This package is an SSL implementation written by Eric Young (eay@cryptsoft.com).

The implementation was written so as to conform with Netscapes SSL.

This library is free for commercial and non-commercial use as long as the following conditions are aheared to. The following conditions apply to all code found in this distribution, be it the RC4, RSA, lhash, DES, etc., code; not just the SSL code. The SSL documentation included with this distribution is covered by the same copyright terms except that the holder is Tim Hudson (tjh@cryptsoft.com).

Copyright remains Eric Young's, and as such any Copyright notices in the code are not to be removed. If this package is used in a product, Eric Young should be given attribution as the author of the parts of the library used. This can be in the form of a textual message at program startup or in documentation (online or textual) provided with the package. Redistribution and use in source and binary forms, with or without modification, are permitted provided that the following conditions are met:

1. Redistributions of source code must retain the copyright notice, this list of conditions and the following disclaimer.

2. Redistributions in binary form must reproduce the above copyright notice, this list of conditions and the following disclaimer in the documentation and/or other materials provided with the distribution.

3. All advertising materials mentioning features or use of this software must display the following acknowledgement: "This product includes cryptographic software written by Eric Young (eay@cryptsoft.com)" The word 'cryptographic' can be left out if the rouines from the library being used are not cryptographic related :-).

4. If you include any Windows specific code (or a derivative thereof) from the apps directory (application code) you must include an acknowledgement: "This product includes software written by Tim Hudson (tjh@cryptsoft. com)"

THIS SOFTWARE IS PROVIDED BY ERIC YOUNG ``AS IS'' AND ANY EXPRESS OR IMPLIED WARRANTIES, INCLUDING, BUT NOT LIMITED TO, THE IMPLIED WARRANTIES OF MERCHANTABILITY AND FITNESS FOR A PARTICULAR PURPOSE ARE DISCLAIMED. IN NO EVENT SHALL THE AUTHOR OR CONTRIBUTORS BE LIABLE FOR ANY DIRECT, INDIRECT, INCIDENTAL, SPECIAL, EXEMPLARY, OR CONSEQUENTIAL DAMAGES (INCLUDING, BUT NOT LIMITED TO, PROCUREMENT OF SUBSTITUTE GOODS OR SERVICES; LOSS OF USE, DATA, OR PROFITS; OR BUSINESS INTERRUPTION) HOWEVER CAUSED AND ON ANY THEORY OF LIABILITY, WHETHER IN CONTRACT, STRICT LIABILITY, OR TORT (INCLUDING NEGLIGENCE OR OTHERWISE) ARISING IN ANY WAY OUT OF THE USE OF THIS SOFTWARE, EVEN IF ADVISED OF THE POSSIBILITY OF SUCH DAMAGE.

The licence and distribution terms for any publically available version or derivative of this code cannot be changed. i.e. this code cannot simply be copied and put under another distribution licence [including the GNU Public Licence.]

BSD License

Some software components of this product incorporate source code covered under the BSD license as follows.

Component Name	License	URL
net-snmp-5.7.3	BSD	http://www.net-snmp.org/about/license.html
pcre-8.38	BSD	
libcap-1.7.4	BSD 2.0	http://www.kernel.org/pub/linux/libs/security/linux-privs/libcap2
lighttpd-1.4.35	BSD 2.0	http://www.opensource.org/licenses/bsd-license.html
MiniUPnP Project Client	BSD 2.0	
pppd-2.4.7	BSD 2.0	http://opensource.org/licenses/BSD-3-Clause

lighttpd is a secure, fast, compliant, and very flexible webserver that has been optimized for high-performance environments. It has a very low memory footprint compared to other webservers and takes care of cpuload. Its advanced feature-set (FastCGI, CGI, Auth, Output-Compression, URL-Rewriting and many more) make lighttpd the perfect webserver-software for every server that suffers load problems. Simple Network Management Protocol (SNMP) is an Internetstandard protocol for managing devices on IP networks. It is used mostly in network management systems to monitor the devices attached to the network for conditions that need administrative attention. Net-SNMP is a suite of applications used to implement SNMP v1, SNMP v2c and SNMP v3 using both IPv4 and IPv6. For more additional information, send email to help.cctv@hanwha.com.

Copyright (C) 2004, Kneschke, incremental

All rights reserved.

Redistribution and use in source and binary forms, with or without modification, are permitted provided that the following conditions are met :

- Redistributions of source code must retain the above copyright notice, this list of conditions and the following disclaimer.
- Redistributions in binary form must reproduce the above copyright notice, this list of conditions and the following disclaimer in the documentation and/or other materials provided with the distribution.
- Neither the name of the 'incremental' nor the names of its contributors may be used to endorse or promote products derived from this software without specific prior written permission.

THIS SOFTWARE IS PROVIDED BY THE COPYRIGHT HOLDERS AND CONTRIBUTORS “AS IS” AND ANY EXPRESS OR IMPLIED WARRANTIES, INCLUDING, BUT NOT LIMITED TO, THE IMPLIED WARRANTIES OF MERCHANTABILITY AND FITNESS FOR A PARTICULAR PURPOSE ARE DISCLAIMED. IN NO EVENT SHALL THE COPYRIGHT OWNER OR CONTRIBUTORS BE LIABLE FOR ANY DIRECT, INDIRECT, INCIDENTAL, SPECIAL, EXEMPLARY, OR CONSEQUENTIAL DAMAGES (INCLUDING, BUT NOT LIMITED TO, PROCUREMENT OF SUBSTITUTE GOODS OR SERVICES; LOSS OF USE, DATA, OR PROFITS; OR BUSINESS INTERRUPTION) HOWEVER CAUSED AND ON ANY THEORY OF LIABILITY, WHETHER IN CONTRACT, STRICT LIABILITY, OR TORT (INCLUDING NEGLIGENCE OR OTHERWISE) ARISING IN ANY WAY OUT OF THE USE OF THIS SOFTWARE, EVEN IF ADVISED OF THE POSSIBILITY OF SUCH DAMAGE.

Copyright (c) 1998-2001 University College London

All rights reserved.

Redistribution and use in source and binary forms, with or without modification, is permitted provided that the following conditions are met :

1. Redistributions of source code must retain the above copyright notice, this list of conditions and the following disclaimer.

2. Redistributions in binary form must reproduce the above copyright notice, this list of conditions and the following disclaimer in the documentation and/or other materials provided with the distribution.

3. All advertising materials mentioning features or use of this software must display the following acknowledgement: This product includes software developed by the Computer Science Department at University College London.

4. Neither the name of the University nor of the Department may be used to endorse or promote products derived from this software without specific prior written permission.

THIS SOFTWARE IS PROVIDED BY THE AUTHORS AND CONTRIBUTORS ``AS IS'' AND ANY EXPRESSED OR IMPLIED WARRANTIES, INCLUDING, BUT NOT LIMITED TO, THE IMPLIED WARRANTIES OF MERCHANTABILITY AND FITNESS FOR A PARTICULAR PURPOSEARE DISCLAIMED. IN NO EVENT SHALL THE AUTHORS OR CONTRIBUTORS BE LIABLE FOR ANY DIRECT, INDIRECT, INCIDENTAL, SPECIAL, EXEMPLARY, OR CONSEQUENTIAL DAMAGES (INCLUDING, BUT NOT LIMITED TO, PROCUREMENT OF SUBSTITUTE GOODS OR SERVICES; LOSS OF USE, DATA, OR PROFITS; OR BUSINESS INTERRUPTION) HOWEVER CAUSED AND ON ANY THEORY OF LIABILITY, WHETHER IN CONTRACT, STRICT LIABILITY, OR TORT (INCLUDING NEGLIGENCE OR OTHERWISE) ARISING IN ANY WAY OUT OF THE USE OF THIS SOFTWARE, EVEN IF ADVISED OF THE POSSIBILITY OF SUCH DAMAGE.

Copyright (c) 1988, 1989, 1990, 1991, 1993, 1994, 1995, 1996 The Regents of the University of California.

All rights reserved.

Redistribution and use in source and binary forms, with or without modification, are permitted provided that the following conditions are met:

1. Redistributions of source code must retain the above copyright notice, this list of conditions and the following disclaimer.

2. Redistributions in binary form must reproduce the above copyright notice, this list of conditions and the following disclaimer in the documentation and/or other materials provided with the distribution.

3. Neither the name of the Regents of the University of California nor the names of its contributors may be used to endorse or promote products derived from this software without specific prior written permission.

THIS SOFTWARE IS PROVIDED BY THE COPYRIGHT HOLDERS AND CONTRIBUTORS "AS IS" AND ANY EXPRESS OR IMPLIED WARRANTIES, INCLUDING, BUT NOT LIMITED TO, THE IMPLIED WARRANTIES OF MERCHANTABILITY AND FITNESS FOR A PARTICULAR PURPOSE ARE DISCLAIMED. IN NO EVENT SHALL THE COPYRIGHT OWNER OR CONTRIBUTORS BE LIABLE FOR ANY DIRECT, INDIRECT, INCIDENTAL, SPECIAL, EXEMPLARY, OR CONSEQUENTIAL DAMAGES (INCLUDING, BUT NOT LIMITED TO, PROCUREMENT OF SUBSTITUTE GOODS OR SERVICES; LOSS OF USE, DATA, OR PROFITS; OR BUSINESS INTERRUPTION) HOWEVER CAUSED AND ON ANY THEORY OF LIABILITY, WHETHER IN CONTRACT, STRICT LIABILITY, OR TORT (INCLUDING NEGLIGENCE OR OTHERWISE) ARISING IN ANY WAY OUT OF THE USE OF THIS SOFTWARE, EVEN IF ADVISED OF THE POSSIBILITY OF SUCH DAMAGE.

Copyright (c) 2006, Creative Labs Inc

All rights reserved.

Redistribution and use in source and binary forms, with or without modification, are permitted provided that the following conditions are met:

1. Redistributions of source code must retain the above copyright notice, this list of conditions and the following disclaimer.

2. Redistributions in binary form must reproduce the above copyright notice, this list of conditions and the following disclaimer in the documentation and/or other materials provided with the distribution.

3. Neither the name of the Creative Labs nor the names of its contributors may be used to endorse or promote products derived from this software without specific prior written permission.

THIS SOFTWARE IS PROVIDED BY THE COPYRIGHT HOLDERS AND CONTRIBUTORS "AS IS" AND ANY EXPRESS OR IMPLIED WARRANTIES, INCLUDING, BUT NOT LIMITED TO, THE IMPLIED WARRANTIES OF MERCHANTABILITY AND FITNESS FOR A PARTICULAR PURPOSE ARE DISCLAIMED. IN NO EVENT SHALL THE COPYRIGHT OWNER OR CONTRIBUTORS BE LIABLE FOR ANY DIRECT, INDIRECT, INCIDENTAL, SPECIAL, EXEMPLARY, OR CONSEQUENTIAL DAMAGES (INCLUDING, BUT NOT LIMITED TO, PROCUREMENT OF SUBSTITUTE GOODS OR SERVICES; LOSS OF USE, DATA, OR PROFITS; OR BUSINESS INTERRUPTION) HOWEVER CAUSED AND ON ANY THEORY OF LIABILITY, WHETHER IN CONTRACT, STRICT LIABILITY, OR TORT (INCLUDING NEGLIGENCE OR OTHERWISE) ARISING IN ANY WAY OUT OF THE USE OF THIS SOFTWARE, EVEN IF ADVISED OF THE POSSIBILITY OF SUCH DAMAGE.

Copyright (c) 2005-2012, Thomas BERNARD

All rights reserved.

Redistribution and use in source and binary forms, with or without modification, are permitted provided that the following conditions are met:

1. Redistributions of source code must retain the above copyright notice, this list of conditions and the following disclaimer.

2. Redistributions in binary form must reproduce the above copyright notice, this list of conditions and the following disclaimer in the documentation and/or other materials provided with the distribution.

3. Neither the name of Thomas BERNARD nor the names of its contributors may be used to endorse or promote products derived from this software without specific prior written permission.

THIS SOFTWARE IS PROVIDED BY THE COPYRIGHT HOLDERS AND CONTRIBUTORS "AS IS" AND ANY EXPRESS OR IMPLIED WARRANTIES, INCLUDING, BUT NOT LIMITED TO, THE IMPLIED WARRANTIES OF MERCHANTABILITY AND FITNESS FOR A PARTICULAR PURPOSE ARE DISCLAIMED. IN NO EVENT SHALL THE COPYRIGHT OWNER OR CONTRIBUTORS BE LIABLE FOR ANY DIRECT, INDIRECT, INCIDENTAL, SPECIAL, EXEMPLARY, OR CONSEQUENTIAL DAMAGES (INCLUDING, BUT NOT LIMITED TO, PROCUREMENT OF SUBSTITUTE GOODS OR SERVICES; LOSS OF USE, DATA, OR PROFITS; OR BUSINESS INTERRUPTION) HOWEVER CAUSED AND ON ANY THEORY OF LIABILITY, WHETHER IN CONTRACT, STRICT LIABILITY, OR TORT (INCLUDING NEGLIGENCE OR OTHERWISE) ARISING IN ANY WAY OUT OF THE USE OF THIS SOFTWARE, EVEN IF ADVISED OF THE POSSIBILITY OF SUCH DAMAGE.

Various copyrights apply to this package, listed in various separate parts below. Please make sure that you read all the parts.

Part 1: CMU/UCD copyright notice: (BSD like)

Copyright 1989, 1991, 1992 by Carnegie Mellon University Derivative Work - 1996, 1998-2000

Copyright 1996, 1998-2000 The Regents of the University of California

All Rights Reserved

Permission to use, copy, modify and distribute this software and its documentation for any purpose and without fee is hereby granted, provided that the above copyright notice appears in all copies and that both that copyright notice and this permission notice appear in supporting documentation, and that the name of CMU and The Regents of the University of California not be used in advertising or publicity pertaining to distribution of the software without specific written permission.

CMU AND THE REGENTS OF THE UNIVERSITY OF CALIFORNIA DISCLAIM ALL WARRANTIES WITH REGARD TO THIS SOFTWARE, INCLUDING ALL IMPLIED WARRANTIES OF MERCHANTABILITY AND FITNESS. IN NO EVENT SHALL CMU OR THE REGENTS OF THE UNIVERSITY OF CALIFORNIA BE LIABLE FOR ANY SPECIAL, INDIRECT OR CONSEQUENTIAL DAMAGES OR ANY DAMAGES WHATSOEVER RESULTING FROM THE LOSS OF USE, DATA OR PROFITS, WHETHER IN AN ACTION OF CONTRACT, NEGLIGENCE OR OTHER TORTIOUS ACTION, ARISING OUT OF OR IN CONNECTION WITH THE USE OR PERFORMANCE OF THIS SOFTWARE.

Part 2 : Networks Associates Technology, Inc copyright notice (BSD)

Copyright (c) 2001-2003, Networks Associates Technology, Inc

All rights reserved.

Redistribution and use in source and binary forms, with or without modification, are permitted provided that the following conditions are met: yy Redistributions of source code must retain the above copyright notice, this list of conditions and the following disclaimer. yy Redistributions in binary form must reproduce the above copyright notice, this list of conditions and the following disclaimer in the documentation and/or other materials provided with the distribution. yy Neither the name of the Networks Associates Technology, Inc nor the names of its contributors may be used to endorse or promote products derived from this software without specific prior written permission.

THIS SOFTWARE IS PROVIDED BY THE COPYRIGHT HOLDERS AND CONTRIBUTORS “AS IS” AND ANY EXPRESS OR IMPLIED WARRANTIES, INCLUDING, BUT NOT LIMITED TO, THE IMPLIED WARRANTIES OF MERCHANTABILITY AND FITNESS FOR A PARTICULAR PURPOSE ARE DISCLAIMED. IN NO EVENT SHALL THE COPYRIGHT HOLDERS OR CONTRIBUTORS BE LIABLE FOR ANY DIRECT, INDIRECT, INCIDENTAL, SPECIAL, EXEMPLARY, OR CONSEQUENTIAL DAMAGES (INCLUDING, BUT NOT LIMITED TO, PROCUREMENT OF SUBSTITUTE GOODS OR SERVICES; LOSS OF USE, DATA, OR PROFITS; OR BUSINESS INTERRUPTION) HOWEVER CAUSED AND ON ANY THEORY OF LIABILITY, WHETHER IN CONTRACT, STRICT LIABILITY, OR TORT (INCLUDING NEGLIGENCE OR OTHERWISE) ARISING IN ANY WAY OUT OF THE USE OF THIS SOFTWARE, EVEN IF ADVISED OF THE POSSIBILITY OF SUCH DAMAGE.

Part 3: Cambridge Broadband Ltd. copyrightnotice (BSD)

Portions of this code are copyright (c) 2001-2003, Cambridge Broadband Ltd.

All rights reserved.

Redistribution and use in source and binary forms, with or without modification, are permitted provided that the following conditions are met: yy Redistributions of source code must retain the above copyright notice, this list of conditions and the following disclaimer. yy Redistributions in binary form must reproduce the above copyright notice, this list of conditions and the following disclaimer in the documentation and/or other materials provided with the distribution. yy The name of Cambridge Broadband Ltd. may not be used to endorse or promote products derived from this software without specific prior written permission.

THIS SOFTWARE IS PROVIDED BY THE COPYRIGHT HOLDER “AS IS" AND ANY EXPRESS OR IMPLIED WARRANTIES, INCLUDING, BUT NOT LIMITED TO, THE IMPLIED WARRANTIES OF MERCHANTABILITY AND FITNESS FOR A PARTICULAR PURPOSE ARE DISCLAIMED. IN NO EVENT SHALL THE COPYRIGHT HOLDER BE LIABLE FOR ANY DIRECT, INDIRECT, INCIDENTAL, SPECIAL, EXEMPLARY, OR CONSEQUENTIAL DAMAGES (INCLUDING, BUT NOT LIMITED TO, PROCUREMENT OF SUBSTITUTE GOODS OR SERVICES; LOSS OF USE, DATA, OR PROFITS; OR BUSINESS INTERRUPTION) HOWEVER CAUSED AND ON ANY THEORY OF LIABILITY, WHETHER IN CONTRACT, STRICT LIABILITY, OR TORT (INCLUDING NEGLIGENCE OR OTHERWISE) ARISING IN ANY WAY OUT OF THE USE OF THIS SOFTWARE, EVEN IF ADVISED OF THE POSSIBILITY OF SUCH DAMAGE.

Part 4: Sun Microsystems, Inc. copyright notice

(BSD)

Copyright (c) 2003 Sun Microsystems, Inc., 4150 Network

Circle, Santa Clara, California 95054, U.S.A.

All rights reserved.

Use is subject to license terms below. This distribution may include materials developed by third parties. Sun, Sun Microsystems, the Sun logo and Solaris are trademarks or registered trademarks of Sun Microsystems, Inc. in the U.S. and other countries. Redistribution and use in source and binary forms, with or without modification, are permitted provided that the following conditions are met: yy Redistributions of source code must retain the above copyright notice, this list of conditions and the following disclaimer. yy Redistributions in binary form must reproduce the above copyright notice, this list of conditions and the following disclaimer in the documentation and/or other materials provided with the distribution. yy Neither the name of the Sun Microsystems, Inc. nor the names of its contributors may be used to endorse or promote products derived from this software without specific prior written permission.

THIS SOFTWARE IS PROVIDED BY THE COPYRIGHT HOLDERS AND CONTRIBUTORS “AS IS” AND ANY EXPRESS OR IMPLIED WARRANTIES, INCLUDING, BUT NOT LIMITED TO, THE IMPLIED WARRANTIES OF MERCHANTABILITY AND FITNESS FOR A PARTICULAR PURPOSE ARE DISCLAIMED. IN NO EVENT SHALL THE COPYRIGHT HOLDERS OR CONTRIBUTORS BE LIABLE FOR ANY DIRECT, INDIRECT, INCIDENTAL, SPECIAL, EXEMPLARY, OR CONSEQUENTIAL DAMAGES (INCLUDING, BUT NOT LIMITED TO, PROCUREMENT OF SUBSTITUTE GOODS OR SERVICES; LOSS OF USE, DATA, OR PROFITS; OR BUSINESS INTERRUPTION) HOWEVER CAUSED AND ON ANY THEORY OF LIABILITY, WHETHER IN CONTRACT, STRICT LIABILITY, OR TORT (INCLUDING NEGLIGENCE OR OTHERWISE) ARISING IN ANY WAY OUT OF THE USE OF THIS SOFTWARE, EVEN IF ADVISED OF THE POSSIBILITY OF SUCH DAMAGE.

Part 5: Sparta, Inc copyright notice (BSD)

Copyright (c) 2003-2009, Sparta, Inc

All rights reserved.

Redistribution and use in source and binary forms, with or without modification, are permitted provided that the following conditions are met: yy Redistributions of source code must retain the above copyright notice, this list of conditions and the following disclaimer. yy Redistributions in binary form must reproduce the

above copyright notice, this list of conditions and the following disclaimer in the documentation and/or other materials provided with the distribution. yy Neither the name of Sparta, Inc nor the names of its contributors may be used to endorse or promote products derived from this software without specific prior written permission.

THIS SOFTWARE IS PROVIDED BY THE COPYRIGHT HOLDERS AND CONTRIBUTORS “AS IS” AND ANY EXPRESS OR IMPLIED WARRANTIES, INCLUDING, BUT NOT LIMITED TO, THE IMPLIED WARRANTIES OF MERCHANTABILITY AND FITNESS FOR A PARTICULAR PURPOSE ARE DISCLAIMED. IN NO EVENT SHALL THE COPYRIGHT HOLDERS OR CONTRIBUTORS BE LIABLE FOR ANY DIRECT, INDIRECT, INCIDENTAL, SPECIAL, EXEMPLARY, OR CONSEQUENTIAL DAMAGES (INCLUDING, BUT NOT LIMITED TO, PROCUREMENT OF SUBSTITUTE GOODS OR SERVICES; LOSS OF USE, DATA, OR PROFITS; OR BUSINESS INTERRUPTION) HOWEVER CAUSED AND ON ANY THEORY OF LIABILITY, WHETHER IN CONTRACT, STRICT LIABILITY, OR TORT (INCLUDING NEGLIGENCE OR OTHERWISE) ARISING IN ANY WAY OUT OF THE USE OF THIS SOFTWARE, EVEN IF ADVISED OF THE POSSIBILITY OF SUCH DAMAGE.

Part 6: Cisco/BUPTNIC copyright notice (BSD)

Copyright (c) 2004, Cisco, Inc and Information Network

Center of Beijing University of Posts and Telecommunications.

All rights reserved.

Redistribution and use in source and binary forms, with or without modification, are permitted provided that the following conditions are met: yy Redistributions of source code must retain the above copyright notice, this list of conditions and the following disclaimer. yy Redistributions in binary form must reproduce the above copyright notice, this list of conditions and the following disclaimer in the documentation and/or other materials provided with the distribution. yy Neither the name of Cisco, Inc, Beijing University of Posts and Telecommunications, nor the names of their contributors may be used to endorse or promote products derived from this software without specific prior written permission.

THIS SOFTWARE IS PROVIDED BY THE COPYRIGHT HOLDERS AND CONTRIBUTORS “AS IS” AND ANY EXPRESS OR IMPLIED WARRANTIES, INCLUDING, BUT NOT LIMITED TO, THE IMPLIED WARRANTIES OF MERCHANTABILITY AND FITNESS FOR A PARTICULAR PURPOSE ARE DISCLAIMED. IN NO EVENT SHALL THE COPYRIGHT HOLDERS OR CONTRIBUTORS BE LIABLE FOR ANY DIRECT, INDIRECT, INCIDENTAL, SPECIAL, EXEMPLARY, OR CONSEQUENTIAL DAMAGES (INCLUDING, BUT NOT LIMITED TO, PROCUREMENT OF SUBSTITUTE GOODS OR SERVICES; LOSS OF USE, DATA, OR PROFITS; OR BUSINESS INTERRUPTION) HOWEVER CAUSED AND ON ANY THEORY OF LIABILITY, WHETHER IN CONTRACT, STRICT LIABILITY, OR TORT (INCLUDING NEGLIGENCE OR OTHERWISE) ARISING IN ANY WAY OUT OF THE USE OF THIS SOFTWARE, EVEN IF ADVISED OF THE POSSIBILITY OF SUCH DAMAGE.

Part 7: Fabasoft R&D Software Software GmbH & Co KG copyright Notice (BSD)

Copyright (c) Fabasoft R&D Software GmbH & Co KG, 2003oss@fabasoft.com

Author: Bernhard Penz

Redistribution and use in source and binary forms, with or without modification, are permitted provided that the following conditions are met: yy Redistributions of source code must retain the above copyright notice, this list of conditions and the following disclaimer. yy Redistributions in binary form must reproduce the above copyright notice, this list of conditions and the following disclaimer in the documentation and/or other materials provided with the distribution. yy The name of Fabasoft R&D Software GmbH & Co KG or any of its subsidiaries, brand or product names may not be used to endorse or promote products derived from this software without specific prior written permission.

THIS SOFTWARE IS PROVIDED BY THE COPYRIGHT HOLDER “AS IS” AND ANY EXPRESS OR IMPLIED WARRANTIES, INCLUDING, BUT NOT LIMITED TO, THE IMPLIED WARRANTIES OF MERCHANTABILITY AND FITNESS FOR A PARTICULAR PURPOSE ARE DISCLAIMED. IN NO EVENT SHALL THE COPYRIGHT HOLDER BE LIABLE FOR ANY DIRECT, INDIRECT, INCIDENTAL, SPECIAL, EXEMPLARY, OR CONSEQUENTIAL DAMAGES (INCLUDING, BUT NOT LIMITED TO, PROCUREMENT OF SUBSTITUTE GOODS OR SERVICES; LOSS OF USE, DATA, OR PROFITS; OR BUSINESS INTERRUPTION) HOWEVER CAUSED AND ON ANY THEORY OF LIABILITY, WHETHER IN CONTRACT, STRICT LIABILITY, OR TORT (INCLUDING NEGLIGENCE OR OTHERWISE) ARISING IN ANY WAY OUT OF THE USE OF THIS SOFTWARE, EVEN IF ADVISED OF THE POSSIBILITY OF SUCH DAMAGE.

Part 8: Apple Inc. copyright notice (BSD)

Copyright (c) 2007 Apple Inc.

All rights reserved.

Redistribution and use in source and binary forms, with or without modification, are permitted provided that the following conditions are met:

1. Redistributions of source code must retain the above copyright notice, this list of conditions and the following disclaimer.

2. Redistributions in binary form must reproduce the above copyright notice, this list of conditions and the following disclaimer in the documentation and/or other materials provided with the distribution. 3. Neither the name of Apple Inc. (“Apple”) nor the names of its contributors may be used to endorse or promote products derived from this software without specific prior written permission.

THIS SOFTWARE IS PROVIDED BY APPLE AND ITS CONTRIBUTORS “AS IS” AND ANY EXPRESS OR IMPLIED WARRANTIES, INCLUDING, BUT NOT LIMITED TO, THE IMPLIED WARRANTIES OF MERCHANTABILITY AND FITNESS FOR A PARTICULAR PURPOSE ARE DISCLAIMED. IN NO EVENT SHALL APPLE OR ITSCONTRIBUTORS BE LIABLE FOR ANY DIRECT, INDIRECT, INCIDENTAL, SPECIAL, EXEMPLARY, OR CONSEQUENTIAL DAMAGES (INCLUDING, BUT NOT LIMITED TO, PROCUREMENT OF SUBSTITUTE GOODS OR SERVICES; LOSS OF USE, DATA, OR PROFITS; OR BUSINESS INTERRUPTION) HOWEVER CAUSED AND ON ANY THEORY OF LIABILITY, WHETHER IN CONTRACT, STRICT LIABILITY, OR TORT (INCLUDING NEGLIGENCE OR OTHERWISE) ARISING IN ANY WAY OUT OF THE USE OF THIS SOFTWARE, EVEN IF ADVISED OF THE POSSIBILITY OF SUCH DAMAGE.

Part 9: ScienceLogic, LLC copyright notice(BSD)

Copyright (c) 2009, ScienceLogic, LLC

All rights reserved.

Redistribution and use in source and binary forms, with or without modification, are permitted provided that the following conditions aremet: yy Redistributions of source code must retain the above copyright notice, this list of conditions and the following disclaimer. yy Redistributions in binary form must reproduce the above copyright notice, this list of conditions and the following disclaimer in the documentation and/or other materials provided with the distribution. yy Neither the name of ScienceLogic, LLC nor the names of its contributors may be used to endorse or promote products derived from this software without specific prior written permission.

THIS SOFTWARE IS PROVIDED BY THE COPYRIGHT HOLDERS AND CONTRIBUTORS “AS IS” AND ANY EXPRESS OR IMPLIED WARRANTIES, INCLUDING, BUT NOT LIMITED TO, THE IMPLIED WARRANTIES OF MERCHANTABILITY AND FITNESS FOR A PARTICULAR PURPOSE ARE DISCLAIMED. IN NO EVENT SHALL THE COPYRIGHT HOLDERS OR CONTRIBUTORS BE LIABLE FOR ANY DIRECT, INDIRECT, INCIDENTAL, SPECIAL, EXEMPLARY, OR CONSEQUENTIAL DAMAGES (INCLUDING, BUT NOT LIMITED TO, PROCUREMENT OF SUBSTITUTE GOODS OR SERVICES; LOSS OF USE, DATA, OR PROFITS; OR BUSINESS INTERRUPTION) HOWEVER CAUSED AND ON ANY THEORY OF LIABILITY, WHETHER IN CONTRACT, STRICT LIABILITY, OR TORT (INCLUDING NEGLIGENCE OR OTHERWISE) ARISING IN ANY WAY OUT OF THE USE OF THIS SOFTWARE, EVEN IF ADVISED OF THE POSSIBILITY OF SUCH DAMAGE

The MIT License

Some software components of this product incorporate source code covered under the MIT license as follows

MIT License 2.0

- Acewidget, bettermeans, jquery-ui, libxml, libxml2, Mesa3D-MesaLib,mwEmbed,OpenGL Samples Pack, Wide Studio, xorg-server, dropbear-2012.55, ncurses-5.7

Copyright (c) 2011, The Dojo Foundation

Copyright 2010, AUTHORS.txt (http://jqueryui.com/about)

Dual licensed under the MIT or GPL Version 2 licenses.

- http://jquery.org/license

- http://docs.jquery.com/UI/Widget

Copyright Daniel Veillard

Copyright Igor Zlatovic <igor@zlatkovic.com>

Copyright Aleksey Sanin

Copyright Gary Pennington <Gary.Pennington@uk.sun.com>

Copyright Alfred Mickautsch <alfred@mickautsch.de>

Copyright Bjorn Reese <bjorn.reese@systematic.dk>

Copyright Joel W. Reed

Copyright William Brack <wbrack@mmm.com.hk>

Copyright (c) 2007-2010 The Khronos Group Inc.

Copyright Atish Kumar Patra

Copyright (c) 2006 Free Software Foundation, Inc.

Permission is hereby granted, free of charge, to any person obtaining a copy of this software and associated documentation files (the "Software"), to deal in the Software without restriction, including without limitation the rights to use, copy, modify, merge, publish, distribute, sublicense, and/or sell copies of the Software, and to permit persons to whom the Software is furnished to do so, subject to the following conditions:

The above copyright notice and this permission notice shall be included in all copies or substantial portions of the Software.

THE SOFTWARE IS PROVIDED "AS IS", WITHOUT WARRANTY OF ANY KIND, EXPRESS OR IMPLIED, INCLUDING BUT NOT LIMITED TO THE WARRANTIES OF MERCHANTABILITY, FITNESS FOR A PARTICULAR PURPOSE AND NONINFRINGEMENT. IN NO EVENT SHALL THE AUTHORS OR COPYRIGHT HOLDERS BE LIABLE FOR ANY CLAIM, DAMAGES OR OTHER LIABILITY, WHETHER IN AN ACTION OF CONTRACT, TORT OR OTHERWISE, ARISING FROM, OUT OF OR IN CONNECTION WITH THE SOFTWARE OR THE USE OR OTHER DEALINGS IN THE SOFTWARE.

Mozilla Public License

Since we, at Hanwha Vision, used the Mozilla Firefox component without modifying the source code according to the MOZILLA Public license 1.1, we are not obliged to provide the source code of the corresponding component.

- Version 1.1

1. Definitions.

1.0.1. "Commercial Use" means distribution or otherwise making the Covered Code available to a third party.

1.1. "Contributor" means each entity that creates or contributes to the creation of Modifications.

1.2. "Contributor Version" means the combination of the Original Code, prior Modifications used by a Contributor, and the Modifications made by that particular Contributor.

1.3. "Covered Code" means the Original Code or Modifications or the combination of the Original Code and Modifications, in each case including portions thereof.

1.4. "Electronic Distribution Mechanism" means a mechanism generally accepted in the software development community for the electronic transfer of data.

1.5. "Executable" means Covered Code in any form other than Source Code.

1.6. "Initial Developer" means the individual or entity identified as the Initial Developer in the Source Code notice required by Exhibit A.

1.7. "Larger Work" means a work which combines Covered Code or portions thereof with code not governed by the terms of this License.

1.8. "License" means this document.

1.8.1. "Licensable" means having the right to grant, to the maximum extent possible, whether at the time of the initial grant or subsequently acquired, any and all of the rights conveyed herein.

1.9. "Modifications" means any addition to or deletion from the substance or structure of either the Original Code or any previous Modifications. When Covered Code is released as a series of files, a Modification is:

A. Any addition to or deletion from the contents of a file containing Original Code or previous Modifications.

B. Any new file that contains any part of the Original Code or previous Modifications.

1.10. "Original Code" means Source Code of computer software code which is described in the Source Code notice required by Exhibit A as Original Code, and which, at the time of its release under this License is not already Covered Code governed by this License.

1.10.1. "Patent Claims" means any patent claim(s), now owned or hereafter acquired, including without limitation, method, process, and apparatus claims, in any patent Licensable by grantor.

1.11. "Source Code" means the preferred form of the Covered Code for making modifications to it, including all modules it contains, plus any associated interface definition files, scripts used to control compilation and installation of an Executable, or source code differential comparisons against either the Original Code or another well known, available Covered Code of the Contributor's choice. The Source Code can be in a compressed or archival form, provided the appropriate decompression or de-archiving software is widely available for no charge.

1.12. "You" (or "Your") means an individual or a legal entity exercising rights under, and complying with all of the terms of, this License or a future version of this License issued under Section 6.1. For legal entities, "You" includes any entity which controls, is controlled by, or is under common control with You. For purposes of this definition, "control" means (a) the power, direct or indirect, to cause the direction or management of such entity, whether by contract or otherwise, or (b) ownership of more than fifty percent (50%) of the outstanding shares or beneficial ownership of such entity.

2. Source Code License.

2.1. The Initial Developer Grant. The Initial Developer hereby grants You a world-wide, royalty-free, non-exclusive license, subject to third party intellectual property claims:

(a) under intellectual property rights (other than patent or trademark) Licensable by Initial Developer to use, reproduce, modify, display, perform, sublicense and distribute the Original Code (or portions thereof) with or without Modifications, and/or as part of a Larger Work; and

(b) under Patents Claims infringed by the making, using or selling of Original Code, to make, have made, use, practice, sell, and offer for sale, and/or otherwise dispose of the Original Code (or portions thereof).

(c) the licenses granted in this Section 2.1(a) and (b) are effective on the date Initial Developer first distributes Original Code under the terms of this License.

(d) Notwithstanding Section 2.1(b) above, no patent license is granted: 1) for code that You delete from the Original Code; 2) separate from the Original Code; or 3) for infringements caused by: i) the modification of the Original Code or ii) the combination of the Original Code with other software or devices.

2.2. Contributor Grant. Subject to third party intellectual property claims, each Contributor hereby grants You a world-wide, royalty-free, non-exclusive license

(a) under intellectual property rights (other than patent or trademark) Licensable by Contributor, to use, reproduce, modify, display, perform, sublicense and distribute the Modifications created by such Contributor (or portions thereof) either on an unmodified basis, with other Modifications, as Covered Code and/or as part of a Larger Work; and

(b) under Patent Claims infringed by the making, using, or selling of Modifications made by that Contributor either alone and/or in combination with its Contributor Version (or portions of such combination), to make, use, sell, offer for sale, have made, and/or otherwise dispose of: 1) Modifications made by that Contributor (or portions thereof); and 2) the combination of Modifications made by that Contributor with its Contributor Version (or portions of such combination).

(c) the licenses granted in Sections 2.2(a) and 2.2(b) are effective on the date Contributor first makes Commercial Use of the Covered Code.

(d) Notwithstanding Section 2.2(b) above, no patent license is granted: 1) for any code that Contributor has deleted from the Contributor Version; 2) separate from the Contributor Version; 3) for infringements caused by: i) third party modifications of Contributor Version or ii) the combination of Modifications made by that Contributor with other software (except as part of the Contributor Version) or other devices; or 4) under Patent Claims infringed by Covered Code in the absence of Modifications made by that Contributor.

3. Distribution Obligations.

3.1. Application of License. The Modifications which You create or to which You contribute are governed by the terms of this License, including without limitation Section 2.2. The Source Code version of Covered Code may be distributed only under the terms of this License or a future version of this License released under Section 6.1, and You must include a copy of this License with every copy of the Source Code You distribute. You may not offer or impose any terms on any Source Code version that alters or restricts the applicable version of this License or the recipients' rights hereunder. However, You may include an additional document offering the additional rights described in Section 3.5.

3.2. Availability of Source Code. Any Modification which You create or to which You contribute must be made available in Source Code form under the terms of this License either on the same media as an Executable version or via an accepted Electronic Distribution Mechanism to anyone to whom you made an Executable version available; and if made available via Electronic Distribution Mechanism, must remain available for at least twelve (12) months after the date it initially became available, or at least six (6) months after a subsequent version of that particular Modification has been made available to such recipients. You are responsible for ensuring that the Source Code version remains available even if the Electronic Distribution Mechanism is maintained by a third party.

3.3. Description of Modifications. You must cause all Covered Code to which You contribute to contain a file documenting the changes You made to create that Covered Code and the date of any change. You must include a prominent statement that the Modification is derived, directly or indirectly, from Original Code provided by the Initial Developer and including the name of the Initial Developer in (a) the Source Code, and (b) in any notice in an Executable version or related documentation in which You describe the origin or ownership of the Covered Code.

3.4. Intellectual Property Matters

(a) Third Party Claims. If Contributor has knowledge that a license under a third party's intellectual property rights is required to exercise the rights granted by such Contributor under Sections 2.1 or 2.2, Contributor must include a text file with the Source Code distribution titled "LEGAL" which describes the claim and the party making the claim in sufficient detail that a recipient will know whom to contact. If Contributor obtains such knowledge after the Modification is made available as described in Section 3.2, Contributor shall promptly modify the LEGAL file in all copies Contributor makes available thereafter and shall take other steps (such as notifying appropriate mailing lists or newsgroups) reasonably calculated to inform those who received the Covered Code that new knowledge has been obtained.

(b) Contributor APIs. If Contributor's Modifications include an application programming interface and Contributor has knowledge of patent licenses which are reasonably necessary to implement that API, Contributor must also include this information in the LEGAL file.

(c) Representations.

Contributor represents that, except as disclosed pursuant to Section 3.4(a) above, Contributor believes that Contributor's Modifications are Contributor's original creation(s) and/or Contributor has sufficient rights to grant the rights conveyed by this License.

3.5. Required Notices. You must duplicate the notice in Exhibit A in each file of the Source Code. If it is not possible to put such notice in a particular Source Code file due to its structure, then You must include such notice in a location (such as a relevant directory) where a user would be likely to look for such a notice. If You created one or more Modification(s) You may add your name as a Contributor to the notice described in Exhibit A. You must also duplicate this License in any documentation for the Source Code where You describe recipients' rights or ownership rights relating to Covered Code. You may choose to offer, and to charge a fee for, warranty, support, indemnity or liability obligations to one or more recipients of Covered Code. However, You may do so only on Your own behalf, and not on behalf of the Initial Developer or any Contributor. You must make it absolutely clear than any such warranty, support, indemnity or liability obligation is offered by You alone, and You hereby agree to indemnify the Initial Developer and every Contributor for any liability incurred by the Initial Developer or such Contributor as a result of warranty, support, indemnity or liability terms You offer.

3.6. Distribution of Executable Versions. You may distribute Covered Code in Executable form only if the requirements of Section 3.1-3.5 have been met for that Covered Code, and if You include a notice stating that the Source Code version of the Covered Code is available under the terms of this License, including a description of how and where You have fulfilled the obligations of Section 3.2. The notice must be conspicuously included in any notice in an Executable version, related documentation or collateral in which You describe recipients' rights relating to the Covered Code. You may distribute the Executable version of Covered Code or ownership rights under a license of Your choice, which may contain terms different from this License, provided that You are in compliance with the terms of this License and that the license for the Executable version does not attempt to limit or alter the recipient's rights in the Source Code version from the rights set forth in this License. If You distribute the Executable version under a different license You must make it absolutely clear that any terms which differ from this License are offered by You alone, not by the Initial Developer or any Contributor. You hereby agree to indemnify the Initial Developer and every Contributor for any liability incurred by the Initial Developer or such Contributor as a result of any such terms You offer.

3.7. Larger Works. You may create a Larger Work by combining Covered Code with other code not governed by the terms of this License and distribute the Larger Work as a single product. In such a case, You must make sure the requirements of this License are fulfilled for the Covered Code.

4. Inability to Comply Due to Statute or Regulation.

If it is impossible for You to comply with any of the terms of this License with respect to some or all of the Covered Code due to statute, judicial order, or regulation then You must: (a) comply with the terms of this License to the maximum extent possible; and (b) describe the limitations and the code they affect. Such description must be included in the LEGAL file described in Section 3.4 and must be included with all distributions of the Source Code. Except to the extent prohibited by statute or regulation, such description must be sufficiently detailed for a recipient of ordinary skill to be able to understand it.

5. Application of this License.

This License applies to code to which the Initial Developer has attached the notice in Exhibit A and to related Covered Code.

6. Versions of the License.

6.1. New Versions. Netscape Communications Corporation (''Netscape") may publish revised and/or new versions of the License from time to time. Each version will be given a distinguishing version number.

6.2. Effect of New Versions. Once Covered Code has been published under a particular version of the License, You may always continue to use it under the terms of that version. You may also choose to use such Covered Code under the terms of any subsequent version of the License published by Netscape. No one other than Netscape has the right to modify the terms applicable to Covered Code created under this License.

6.3. Derivative Works. If You create or use a modified version of this License (which you may only do in order to apply it to code which is not already Covered Code governed by this License), You must (a) rename Your license so that the phrases "Mozilla", "MOZILLAPL", "MOZPL", "Netscape", "MPL", "NPL" or any confusingly similar phrase do not appear in your license (except to note that your license differs from this License) and (b) otherwise make it clear that Your version of the license contains terms which differ from the Mozilla Public License and Netscape Public License. (Filling in the name of the Initial Developer, Original Code or Contributor in the notice described in Exhibit A shall not of themselves be deemed to be modifications of this License.)

7. DISCLAIMER OF WARRANTY.

COVERED CODE IS PROVIDED UNDER THIS LICENSE ON AN "AS IS" BASIS, WITHOUT WARRANTY OF ANY KIND, EITHER EXPRESSED OR IMPLIED, INCLUDING, WITHOUT LIMITATION, WARRANTIES THAT THE COVERED CODE IS FREE OF DEFECTS, MERCHANTABLE, FIT FOR A PARTICULAR PURPOSE OR NON-INFRINGING. THE ENTIRE RISK AS TO THE QUALITY AND PERFORMANCE OF THE COVERED CODE IS WITH YOU. SHOULD ANY COVERED CODE PROVE DEFECTIVE IN ANY RESPECT, YOU (NOT THE INITIAL DEVELOPER OR ANY OTHER CONTRIBUTOR) ASSUME THE COST OF ANY NECESSARY SERVICING, REPAIR OR CORRECTION. THIS DISCLAIMER OF WARRANTY CONSTITUTES AN ESSENTIAL PART OF THIS LICENSE. NO USE OF ANY COVERED CODE IS AUTHORIZED HEREUNDER EXCEPT UNDER THIS DISCLAIMER.

8. TERMINATION.

8.1. This License and the rights granted hereunder will terminate automatically if You fail to comply with terms herein and fail to cure such breach within 30 days of becoming aware of the breach. All sublicenses to the Covered Code which are properly granted shall survive any termination of this License. Provisions which, by their nature, must remain in effect beyond the termination of this License shall survive.

8.2. If You initiate litigation by asserting a patent infringement claim (excluding declatory judgment actions) against Initial Developer or a Contributor (the Initial Developer or Contributor against whom You file such action is referred to as "Participant") alleging that:

(a) such Participant's Contributor Version directly or indirectly infringes any patent, then any and all rights granted by such Participant to You under Sections 2.1 and/or 2.2 of this License shall, upon 60 days notice from Participant terminate prospectively, unless if within 60 days after receipt of notice You either: (i) agree in writing to pay Participant a mutually agreeable reasonable royalty for Your past and future use of Modifications made by such Participant, or (ii) withdraw Your litigation claim with respect to the Contributor Version against such Participant. If within 60 days of notice, a reasonable royalty and payment arrangement are not mutually agreed upon in writing by the parties or the litigation claim is not withdrawn, the rights granted by Participant to You under Sections 2.1 and/or 2.2 automatically terminate at the expiration of the 60 day notice period specified above.

(b) any software, hardware, or device, other than such Participant's Contributor Version, directly or indirectly infringes any patent, then any rights granted to You by such Participant under Sections 2.1(b) and 2.2(b) are revoked effective as of the date You first made, used, sold, distributed, or had made, Modifications made by that Participant.

8.3. If You assert a patent infringement claim against Participant alleging that such Participant's Contributor Version directly or indirectly infringes any patent where such claim is resolved (such as by license or settlement) prior to the initiation of patent infringement litigation, then the reasonable value of the licenses granted by such Participant under Sections 2.1 or 2.2 shall be taken into account in determining the amount or value of any payment or license.

8.4. In the event of termination under Sections 8.1 or 8.2 above, all end user license agreements (excluding distributors and resellers) which have been validly granted by You or any distributor hereunder prior to termination shall survive termination.

9. LIMITATION OF LIABILITY.

UNDER NO CIRCUMSTANCES AND UNDER NO LEGAL THEORY, WHETHER TORT (INCLUDING NEGLIGENCE), CONTRACT, OR OTHERWISE, SHALL YOU, THE INITIAL DEVELOPER, ANY OTHER CONTRIBUTOR, OR ANY DISTRIBUTOR OF COVERED CODE, OR ANY SUPPLIER OF ANY OF SUCH PARTIES, BE LIABLE TO ANY PERSON FOR ANY INDIRECT, SPECIAL, INCIDENTAL, OR CONSEQUENTIAL DAMAGES OF ANY CHARACTER INCLUDING, WITHOUT LIMITATION, DAMAGES FOR LOSS OF GOODWILL, WORK STOPPAGE, COMPUTER FAILURE OR MALFUNCTION, OR ANY AND ALL OTHER COMMERCIAL DAMAGES OR LOSSES, EVEN IF SUCH PARTY SHALL HAVE BEEN INFORMED OF THE POSSIBILITY OF SUCH DAMAGES. THIS LIMITATION OF LIABILITY SHALL NOT APPLY TO LIABILITY FOR DEATH OR PERSONAL INJURY RESULTING FROM SUCH PARTY'S NEGLIGENCE TO THE EXTENT APPLICABLE LAW PROHIBITS SUCH LIMITATION. SOME JURISDICTIONS DO NOT ALLOW THE EXCLUSION OR LIMITATION OF INCIDENTAL OR CONSEQUENTIAL DAMAGES, SO THIS EXCLUSION AND LIMITATION MAY NOT APPLY TO YOU. 10. U.S. GOVERNMENT END USERS.

The Covered Code is a "commercial item," as that term is defined in 48 C.F.R. 2.101 (Oct. 1995), consisting of "commercial computer software" and "commercial computer software documentation," as such terms are used in 48 C.F.R. 12.212 (Sept. 1995). Consistent with 48 C.F.R. 12.212 and 48 C.F.R. 227.7202-1 through 227.7202-4 (June 1995), all U.S. Government End Users acquire Covered Code with only those rights set forth herein.

11. MISCELLANEOUS.

This License represents the complete agreement concerning subject matter hereof. If any provision of this License is held to be unenforceable, such provision shall be reformed only to the extent necessary to make it enforceable. This License shall be governed by California law provisions (except to the extent applicable law, if any, provides otherwise), excluding its conflictof-law provisions. With respect to disputes in which at least one party is a citizen of, or an entity chartered or registered to do business in the United States of America, any litigation relating to this License shall be subject to the jurisdiction of the Federal Courts of the Northern District of California, with venue lying in Santa Clara County, California, with the losing party responsible for costs, including without limitation, court costs and reasonable attorneys' fees and expenses. The application of the United Nations Convention on Contracts for the International Sale of Goods is expressly excluded. Any law or regulation which

provides that the language of a contract shall be construed against the drafter shall not apply to this License.

12. RESPONSIBILITY FOR CLAIMS.

As between Initial Developer and the Contributors, each party is responsible for claims and damages arising, directly or indirectly, out of its utilization of rights under this License and You agree to work with Initial Developer and Contributors to distribute such responsibility on an equitable basis. Nothing herein is intended or shall be deemed to constitute any admission of liability.

13. MULTIPLE-LICENSED CODE.

Initial Developer may designate portions of the Covered Code as Multiple-Licensed. Multiple-Licensedmeans that the Initial Developer permits you to utilize portions of the Covered Code under Your choice of the MPL or the alternative licenses, if any, specified by the Initial Developer in the file described in Exhibit A.

EXHIBIT A -Mozilla Public License.

The contents of this file are subject to the Mozilla Public License Version 1.1 (the "License"); you may not use this file except in compliance with the License. You may obtain a copy of the License at http://www.mozilla.org/MPL/Software distributed under the License is distributed on an "AS IS" basis, WITHOUT WARRANTY OF ANY KIND, either express or implied. See the License for the specific language governing rights and limitations under the License.

The Original Code is _____.

The Initial Developer of the Original Code is _____. Portions created by _____ are Copyright (C) _____ _____. All Rights Reserved.

Contributor(s): _____.

Alternatively, the contents of this file may be used under the terms of the _____ license (the [___] License), in which case the provisions of [_____] License are applicable instead of those above. If you wish to allow use of your version of this file only under the terms of the [____] License and not to allow others to use your version of this file under the MPL, indicate your decision by deleting the provisions above and replace them with the notice and other provisions required by the [___] License. If you do not delete the provisions above, a recipient may use your version of this file under either the MPL or the [___] License."

[NOTE: The text of this Exhibit A may differ slightly from the text of the notices in the Source Code files of the Original Code. You should use the text of this Exhibit A rather than the text found in the Original Code Source Code for Your Modifications

The Independent JPEG Group's JPEG Software

The software included in this product contains copyrighted software that is licensed under the JPEG license.

- JPEG license
  - Code project . Generating Outline OpenGL, Libjpeg

This distribution contains the sixth public release of the Independent JPEG Group's free JPEG software. You are welcome to redistribute this software and to use it for any purpose, subject to the conditions under LEGAL ISSUES, below.

Serious users of this software (particularly those incorporating it into larger programs) should contact IJG at jpeg-info@uunet.uu.net to be added to our electronic mailing list. Mailing list members are notified of updates and have a chance to participate in technical discussions, etc.

This software is the work of Tom Lane, Philip Gladstone, Jim Boucher, Lee Crocker, Julian Minguillon, Luis Ortiz, George Phillips, Davide Rossi, Guido Vollbeding, Ge' Weijers, and other members of the Independent JPEG Group.

IJG is not affiliated with the official ISO JPEG standards committee.

LEGAL ISSUES

==========

In plain English:

1. We don't promise that this software works. (But if you find any bugs, please let us know!)

2. You can use this software for whatever you want. You don't have to pay us.

3. You may not pretend that you wrote this software. If you use it in a program, you must acknowledge somewhere in your documentation that you've used the IJG code.

In legalese:

The authors make NO WARRANTY or representation, either express or implied, with respect to this software, its quality, accuracy, merchantability, or fitness for a particular purpose. This software is provided "AS IS", and you, its user, assume the entire risk as to its quality and accuracy.

This software is copyright (C) 1991-1998, Thomas G. Lane. All Rights Reserved except as specified below.

Permission is hereby granted to use, copy, modify, and distribute this software (or portions thereof) for any purpose, without fee, subject to these conditions:

(1) If any part of the source code for this software is distributed, then this README file must be included, with this copyright and no-warranty notice unaltered; and any additions, deletions, or changes to the original files must be clearly indicated in accompanying documentation.

(2) If only executable code is distributed, then the accompanying documentation must state that "this software is based in part on the work of the Independent JPEG Group".

(3) Permission for use of this software is granted only if the user accepts full responsibility for any undesirable consequences; the authors accept NO LIABILITY for damages of any kind.

These conditions apply to any software derived from or based on the IJG code, not just to the unmodified library. If you use our work, you ought to acknowledge us.

Permission is NOT granted for the use of any IJG author's name or company name in advertising or publicity relating to this software or products derived from it. This software may be referred to only as "the Independent JPEG Group's software".

We specifically permit and encourage the use of this software as the basis of commercial products, provided that all warranty or liability claims are assumed by the product vendor.

ansi2knr.c is included in this distribution by permission of L. Peter Deutsch, sole proprietor of its copyright holder, Aladdin Enterprises of Menlo Park, CA.

ansi2knr.c is NOT covered by the above copyright and conditions, but instead by the usual distribution terms of the Free Software Foundation; principally, that you must include source code if you redistribute it. (See the file ansi2knr.c for full details.) However, since ansi2knr. c is not needed as part of any program generated from the IJG code, this does not limit you more than the foregoing paragraphs do.

The Unix configuration script "configure" was produced with GNU Autoconf. It is copyright by the Free Software Foundation but is freely distributable. The same holds for its supporting scripts (config.guess, config.sub, ltconfig, ltmain. sh). Another support script, install-sh, is copyright by M.I.T. but is also freely distributable.

It appears that the arithmetic coding option of the JPEG spec is covered by patents owned by IBM, AT&T, and Mitsubishi. Hence arithmetic coding cannot legally be used without obtaining one or more licenses. For this reason, support for arithmetic coding has been removed from the free JPEG software. (Since arithmetic coding provides only a marginal gain over the unpatented Huffman mode, it is unlikely that very many implementations will support it.) So far as we are aware, there are no patent restrictions on the remaining code.

The IJG distribution formerly included code to read and write GIF files. To avoid entanglement with the Unisys LZW patent, GIF reading support has been removed altogether, and the GIF writer has been simplified to produce "uncompressed GIFs". This technique does not use the LZW algorithm; the resulting GIF files are larger than usual, but are readable by all standard GIF decoders.

We are required to state that

"The Graphics Interchange Format(c) is the Copyright property of CompuServe Incorporated. GIF(sm) is a Service Mark property of CompuServe Incorporated."

T-Kernel License

- This Product uses the Source Code of T-Kernel under T-License granted by the T-Engine Forum(www.t-engine.org)

T-License [License Agreement for Source Code of T-Kernel]

established by T-Engine Forum
on January 23, 2004
revised on June 17, 2004
revised on December 21, 2006
revised on March 24, 2009

Article 1. Scope of License Agreement

1. This License Agreement sets forth copyrights and the terms and conditions of use applicable to the source code of T-Kernel distributed by T-Engine Forum and any derivative work created therefrom.

Article 2. Definition

1. "T-Kernel" means a real-time operating system controlled and distributed by T-Engine Forum on behalf of the copyright holder thereof.

2. "Source Code" means a source program, including related comments and documentations, for the T-Kernel and the Ported Source Code defined in Article 2.8 which is registered with T-Engine Forum.

3. "Hardware-dependent Part" means the part of the Source Code which depends on hardware and needs to be changed when the Source Code is ported and operated on the target hardware, and is designated and separated as such part.

4. "Compiler-dependent Part" means the part of the Source Code which depends on compiler and needs to be changed when the Source Code is ported and operated on the target hardware, and is designated and separated as such part.

5. "Header File" means the part of the Source Code which contains definitions necessary to develop application programs.

6. "T-Engine Hardware" means the hardware which is manufactured in accordance with the T-Engine Hardware specifications or the μT-Engine Hardware specifications issued by T-Engine Forum, and registered with T-Engine Forum.

7. "Similar Hardware to T-Engine Hardware" means any hardware (including software which emulates hardware) other than that defined in Article 2.6 above, on which the T-Kernel can be operated.

8. "Ported Source Code" means a source program produced from the Source Code by modifying only its Hardwaredependent Part and/or Compiler-dependent Part to enable it to be operated on the T-Engine Hardware or the Similar Hardware to T-Engine Hardware. The Ported Source Code which is registered with T-Engine Forum shall be included in the Source Code.

9. "Modified Source Code" means a source program modified from the Source Code for the purpose of improving its performance, increasing or decreasing its function, and the like. The Ported Source Code shall not be included in the Modified Source Code.

10. "Binary Code" means an executable code form which is created by compiling programs, which include all or part of the Source Code or the Modified Source Code.

11. "Derivative Work" means the Modified Source Code or the Binary Code.

12. "Embedded Product" means any product which operates with executable code form of the Source Code, the Modified Source Code or the Binary Code loaded on its hardware.

13. "End User" means a consumer who uses the Embedded Product.

14. "System Developer" means any person who develops the Embedded Product by itself or has a third party develop the same, and provides, whether with or without payment, the End User with the Embedded Product.

15. "Distributor of Modification" means any person who produces the Modified Source Code and, whether with or without payment, distributes the same to any third party.

16. "Patch for Modification" means a difference, program, system, or the like in order to create the Modified Source Code from the Source Code or the Binary Code thereof.

17. "Vicarious Execution of Patch Processing" means vicarious execution service to create the Modified Source Code applying the Patch for Modification to the Source Code or the Binary Code thereof.

18. "Source Code User" means a person who uses the Source Code.

19. "Distribution" means any of the following acts:

1. to transmit a work to a large number of specific persons through the Internet communication, broadcasting, and the like;

2. to transmit a work to the general public through the Internet communication, broadcasting, and the like automatically in response to a request from the public; and

3. to distribute a copy of a work to the general public or a large number of specific persons.

Article 3. Copyright

1. The copyrights of the Source Code shall be owned by Ken Sakamura.

Article 4. License of Source Code

1. As provided for in this Article, T-Engine Forum shall provide, and grant a license to use, the Source Code free of charge to any person who has taken the necessary procedure for registration as prescribed by T-Engine Forum and agreed to the T-License.

2. The Source Code shall be distributed exclusively by T-Engine Forum. Any person who obtains the Source Code under Article 4.1 above shall not make any re-Distribution of the Source Code.

3. In accordance with the license granted under Article 4.1 above, the Source Code User may perform the following acts:

1. to copy and/or modify the Source Code provided by T-Engine Forum hereunder for its own research, development and the like.

2. to run the Source Code provided by T-Engine Forum hereunder for its own research, development and the like.

3. to run the Source Code modified in accordance with the provision of Article 4.3 (1) above for its own research, development and the like.

4. to distribute the Binary Code created from the Source Code provided by T-Engine Forum hereunder or from the Source Code modified in accordance with the provision of Article 4.3 (1) above.

4. In accordance with the license granted under Article 4.1 above, the System Developer may perform the following acts:

1. to perform any and all acts set forth in the Article 4.3 above.

2. to develop and manufacture the Embedded Product containing the Binary Code, and, whether with or without payment, provide the End User with the same and make the Binary Code available to the End User on the Embedded Product.

5. The Source Code User and the System Developer shall be obligated to give a notice that the Source Code is used, in such a way as separately specified by T-Engine Forum, when they use the Source Code or the Binary Code, or make the Binary Code available for the End User on the Embedded Product.

Article 5. Distribution of Modified Source Code

1. Any of A- members of T-Engine Forum may become the Distributor of Modification by obtaining the approval of T-Engine Forum through the registration procedure as prescribed by the Forum provided that only the department of the A- member which has taken the registration procedure may distribute the Modified Source Code in such a way as provided for in this Article as long as it holds the Amembership.

2. The Distributor of Modification may create the Modified Source Code based on the Source Code provided by T-Engine Forum and the Patch for Modification to be applied to create such Modified Source Code from the Source Code.

3. The Distributor of Modification shall, prior to the distribution, inform T-Engine Forum of and register a name and description of the Modified Source Code in such a way as specified by T-Engine Forum.

4. The Distributor of Modification shall determine the name of the Modified Source Code subject to the rules separately established by T-Engine Forum and publish an appropriate notice as required by the rules on the Patch for Modification and the Modified Source Code.

5. The Distributor of Modification may distribute the Modified Source Code to a third party, whether with or without payment, provided that the Distributor of Modification shall take the necessary measures to prohibit the third party from making the re-Distribution of the Modified Source Code.

6. Developer with the Patch for Modification. Provided, however, that the Distributor of Modification shall be obligated to confirm that the System Developer is the Source Code User duly licensed under Article 4.1.

7. The Distributor of Modification may perform the Vicarious Execution of Patch Processing for the System Developer.

8. The System Developer shall not distribute the Modified Source Code in further modified form to any third party as a stand-alone software product.

9. The System Developer may, under the same obligation as imposed in Article 4.5, make the Embedded Product available for the End User through use of the Patch for Modification distributed by the Distributor of Modification or the Derivative Works obtained through the Vicarious Execution of Patch Processing.

Article 6. Distribution and Registration of the Ported Source Code

1. The Source Code User and the System Developer may, whether with or without charge, distribute to any third party only the following parts of the Ported Source Code on the T-Engine Hardware or the Similar Hardware to T-Engine Hardware:

1. The Hardware-dependent Part and/or Compiler-dependent Part; provided that the Source Code User and the System Developer shall inform T-Engine Forum of, and T-Engine Forum may publish, a method for distributing said Part(s) to third parties.

2. The Header File; provided that the Header File shall be distributed together with the Binary Code of the Ported Source Code.

2. Any member of T-Engine Forum may request T-Engine Forum to register and distribute, as an original source code for T-Kernel, the Ported Source Code on the T-Engine Hardware or the Similar Hardware to T-Engine Hardware.

3. Any member of T-Engine Forum who requests the distribution mentioned in the preceding paragraph shall accede to the following conditions:

1. The member shall confirm that the object hardware is the T-Engine Hardware or the Similar Hardware to T-Engine Hardware.

2. The member shall provide T-Engine Forum with a complete set of operational environment for the object hardware and T-Kernel free of charge when requesting the distribution.

3. The member shall submit test results of the Ported Source Code to T-Engine Forum when requesting the distribution.

4. In the event that T-Engine Forum accepts the request mentioned in Article 6.2, T-Engine Forum shall register and distribute the Ported Source Code as the Source Code for T-Kernel. Provided, however, that the Ported Source Code may be treated in the same way as the Modified Source Code until the time of registration hereunder.

5. The provision set forth in Article 3 shall apply to the Ported Source Code registered in accordance with this Article.

Article 7. Use for Other Purpose

1. Any use of the Source Code, the Modified Source Code or the Ported Source Code other than those stipulated in Articles 4, 5 and 6 shall be subject to the prior approval of T-Engine Forum.

Article 8. Limited Warranty

1. T-Engine Forum and the copyright holder of the Source Code warrant that the Source Code does not infringe third party's copyrights. Provided, however, that T-Engine Forum and the copyright holder of the Source Code make no warranty as to the Hardware-dependent Part and/or Compiler- dependent Part set forth in Article 6.2 in the Ported Source Code by any third party.

2. Neither T-Engine Forum nor the copyright holder of the Source Code warrants that the Source Code will fit for any particular purpose of the Source Code User.

3. Neither T-Engine Forum nor the copyright holder of the Source Code warrants that the Source Code does not infringe any third party's industrial property rights. In no event shall T-Engine Forum and the copyright holder of the Source Code be liable for any dispute which may arise between the Source Code User and a third party in connection with the third party's industrial property rights.

Article 9. Indemnity

1. Neither T-Engine Forum nor the copyright holder of the Source Code shall be liable for any damages (including, but not limited to, damages resulting from loss of profit, business interruption, loss of business information or any other pecuniary damage) arising out of use or impossibility of use of the Source Code, even if T-Engine Forum and the copyright holder have been informed of the possibility of such damages.

Article 10. Breach of Agreement

1. In case that T-Engine Forum considers that this License Agreement is breached or that the popularization of T-Kernel is obstructed, T-Engine Forum shall take measures to correct such breach or such obstruction, take measures on the ground of copyright infringement, or take any other necessary measures against the breaching person or the obstructing person, regardless of whether or not the said person is a member of T-Engine Forum.

2. In case of breach of this License Agreement by a member of T-Engine Forum, T-Engine Forum may take appropriate measures against the member; for example, the member is disqualified from membership, depending on what kind of breach has been committed by it.

3. Any legal dispute which may arise in relation to any breach of this License Agreement shall be subject to the exclusive jurisdiction of the Tokyo District Court.

Article 11. Governing Law and Language

1. This License Agreement shall be governed by and interpreted under the laws of Japan.

2. This License Agreement is executed in both Japanese text and English text provided that the Japanese text shall govern the interpretation and performance of this License Agreement.

Apache License 2.0

Component	Name License	URL
mDNSResponder_bonjour	Apache License 2.0	http://www.apache.org/licenses/LICENSE-2.0

TERMS AND CONDITIONS FOR USE, REPRODUCTION, AND DISTRIBUTION

1. Definitions.

"License" shall mean the terms and conditions for use, reproduction, and distribution as defined by Sections 1 through 9 of this document.

"Licensor" shall mean the copyright owner or entity authorized by the copyright owner that is granting the License.

"Legal Entity" shall mean the union of the acting entity and all other entities that control, are controlled by, or are under common control with that entity. For the purposes of this definition, "control" means (i) the power, direct or indirect, to cause the direction or management of such entity, whether by contract or otherwise, or (ii) ownership of fifty percent (50%) or more of the outstanding shares, or (iii) beneficial ownership of such entity.

"You" (or "Your") shall mean an individual or Legal Entity exercising permissions granted by this License. "Source" form shall mean the preferred form for making modifications, including but not limited to software source code, documentation source, and configuration files.

"Object" form shall mean any form resulting from mechanical transformation or translation of a Source form, including but not limited to compiled object code, generated documentation, and conversions to other media types.

"Work" shall mean the work of authorship, whether in Source or Object form, made available under the License, as indicated by a copyright notice that is included in or attached to the work (an example is provided in the Appendix below).

"Derivative Works" shall mean any work, whether in Source or Object form, that is based on (or derived from) the Work and for which the editorial revisions, annotations, elaborations, or other modifications represent, as a whole, an original work of authorship. For the purposes of this License, Derivative Works shall not include works that remain separable from, or merely link (or bind by name) to the interfaces of, the Work and Derivative Works thereof.

"Contribution" shall mean any work of authorship, including the original version of the Work and any modifications or additions to that Work or Derivative Works thereof, that is intentionally submitted to Licensor for inclusion in the Work by the copyright owner or by an individual or Legal Entity authorized to submit on behalf of the copyright owner. For the purposes of this definition, "submitted" means any form of electronic, verbal, or written communication sent to the Licensor or its representatives, including but not limited to communication on electronic mailing lists, source code control systems, and issue tracking systems that are managed by, or on behalf of, the Licensor for the purpose of discussing and improving the Work, but excluding communication that is conspicuously marked or otherwise designated in writing by the copyright owner as "Not a Contribution." "Contributor" shall mean Licensor and any individual or Legal Entity on behalf of whom a Contribution has been received by Licensor and subsequently incorporated within the Work.

2. Grant of Copyright License. Subject to the terms and conditions of this License, each Contributor hereby grants to You a perpetual, worldwide, non-exclusive, no-charge, royalty-free, irrevocable copyright license to reproduce, prepare Derivative Works of, publicly display, publicly perform, sublicense, and distribute the Work and such Derivative Works in Source or Object form.

3. Grant of Patent License. Subject to the terms and conditions of this License, each Contributor hereby grants to You a perpetual, worldwide, non-exclusive, no-charge, royaltyfree, irrevocable (except as stated in this section) patent license to make, have made, use, offer to sell, sell, import, and otherwise transfer the Work, where such license applies only to those patent claims licensable by such Contributor that are necessarily infringed by their Contribution(s) alone or by combination of their Contribution(s) with the Work to which such Contribution(s) was submitted. If You institute patent litigation against any entity (including a crossclaim or counterclaim in a lawsuit) alleging that the Work or a Contribution incorporated within the Work constitutes direct or contributory patent infringement, then any patent licenses granted to You under this License for that Work shall terminate as of the date such litigation is filed.

4. Redistribution. You may reproduce and distribute copies of the Work or Derivative Works thereof in any medium, with or without modifications, and in Source or Object form, provided that You meet the following conditions:

(a) You must give any other recipients of the Work or Derivative Works a copy of this License; and

(b) You must cause any modified files to carry prominent notices stating that You changed the files; and

(c) You must retain, in the Source form of any Derivative Works that You distribute, all copyright, patent, trademark, and attribution notices from the Source form of the Work, excluding those notices that do not pertain to any part of the Derivative Works; and

(d) If the Work includes a "NOTICE" text file as part of its distribution, then any Derivative Works that You distribute must include a readable copy of the attribution notices contained within such NOTICE file, excluding those notices that do not pertain to any part of the Derivative Works, in at least one of the following places: within a NOTICE text file distributed as part of the Derivative Works; within the Source form or documentation, if provided along with the Derivative Works; or, within a display generated by the Derivative Works, if and wherever such third-party notices normally appear. The contents of the NOTICE file are for informational purposes only and do not modify the License. You may add Your own attribution notices within Derivative Works that You distribute, alongside or as an addendum to the NOTICE text from the Work, provided that such additional attribution notices cannot be construed as modifying the License.

You may add Your own copyright statement to Your modifications and may provide additional or different license terms and conditions for use, reproduction, or distribution of Your modifications, or for any such Derivative Works as a whole, provided Your use, reproduction, and distribution of the Work otherwise complies with the conditions stated in this License.

5. Submission of Contributions. Unless You explicitly state otherwise, any Contribution intentionally submitted for inclusion in the Work by You to the Licensor shall be under the terms and conditions of this License, without any additional terms or conditions. Notwithstanding the above, nothing herein shall supersede or modify the terms of any separate license agreement you may have executed with Licensor regarding such Contributions.

6. Trademarks. This License does not grant permission to use the trade names, trademarks, service marks, or product names of the Licensor, except as required for reasonable and customary use in describing the origin of the Work and reproducing the content of the NOTICE file.

7. Disclaimer of Warranty. Unless required by applicable law or agreed to in writing, Licensor provides the Work (and eachContributor provides its Contributions) on an "AS IS" BASIS, WITHOUT WARRANTIES OR CONDITIONS OF ANY KIND, either express or implied, including, without limitation, any warranties or conditions of TITLE, NONINFRINGEMENT, MERCHANTABILITY, or FITNESS FOR A PARTICULAR PURPOSE. You are solely responsible for determining the appropriateness of using or redistributing the Work and assume any risks associated with Your exercise of permissions under this License.

8. Limitation of Liability. In no event and under no legal theory, whether in tort (including negligence), contract, or otherwise, unless required by applicable law (such as deliberate and grossly negligent acts) or agreed to in writing, shall any Contributor be liable to You for damages, including any direct, indirect, special, incidental, or consequential damages of any character arising as a result of this License or out of the use or inability to use the Work (including but not limited to damages for loss of goodwill, work stoppage, computer failure or malfunction, or any and all other commercial damages or losses), even if such Contributor has been advised of the possibility of such damages.

9. Accepting Warranty or Additional Liability. While redistributing the Work or Derivative Works thereof, You may choose to offer, and charge a fee for, acceptance of support, warranty, indemnity, or other liability obligations and/or rights consistent with this License. However, in accepting such obligations, You may act only on Your own behalf and on Your sole responsibility, not on behalf of any other Contributor, and only if You agree to indemnify, defend, and hold each Contributor harmless for any liability incurred by, or claims asserted against, such Contributor by reason of your accepting any such warranty or additional liability.

END OF TERMS AND CONDITIONS

APPENDIX: How to apply the Apache License to your work.

To apply the Apache License to your work, attach the following boilerplate notice, with the fields enclosed by brackets "[]" replaced with your own identifying information. (Don't include the brackets!) The text should be enclosed in the appropriate comment syntax for the file format. We also recommend that a file or class name and description of purpose be included on the same "printed page" as the copyright notice for easier identification within third-party archives.

Copyright [yyyy] [name of copyright owner]

Licensed under the Apache License, Version 2.0 (the "License"); you may not use this file except in compliance with the License. You may obtain a copy of the License at http://www.apache.org/licenses/LICENSE-2.0

Unless required by applicable law or agreed to in writing, software distributed under the License is distributed on an "AS IS" BASIS, WITHOUT WARRANTIES OR CONDITIONS OF ANY KIND, either express or implied. See the License for the specific language governing permissions and limitations under the License.

BZip2 License

This program, "bzip2", the associated library "libbzip2", and all documentation, are copyright (C) 1996-2007 Julian R Seward. All rights reserved.

Component Name	License	URL
bzip2-1.0.6	Bzip2	http://www.bzip.org/

Redistribution and use in source and binary forms, with or without modification, are permitted provided that the following conditions are met:

1. Redistributions of source code must retain the above copyright notice, this list of conditions and the following disclaimer.

2. The origin of this software must not be misrepresented; you must not claim that you wrote the original software. If you use this software in a product, an acknowledgment in the product documentation would be appreciated but is not required.

3. Altered source versions must be plainly marked as such, and must not be misrepresented as being the original software.

4. The name of the author may not be used to endorse or promote products derived from this software without specific prior written permission.

THIS SOFTWARE IS PROVIDED BY THE AUTHOR ``AS IS'' AND ANY EXPRESS OR IMPLIED WARRANTIES, INCLUDING, BUT NOT LIMITED TO, THE IMPLIED WARRANTIES OF MERCHANTABILITY AND FITNESS FOR A PARTICULAR PURPOSE ARE DISCLAIMED. IN NO EVENT SHALL THE AUTHOR BE LIABLE FOR ANY DIRECT, INDIRECT, INCIDENTAL, SPECIAL, EXEMPLARY, OR CONSEQUENTIAL DAMAGES (INCLUDING, BUT NOT LIMITED TO, PROCUREMENT OF SUBSTITUTE GOODS OR SERVICES; LOSS OF USE, DATA, OR PROFITS; OR BUSINESS INTERRUPTION) HOWEVER CAUSED AND ON ANY THEORY OF LIABILITY, WHETHER IN CONTRACT, STRICT LIABILITY, OR TORT (INCLUDING NEGLIGENCE OR OTHERWISE) ARISING IN ANY WAY OUT OF THE USE OF THIS SOFTWARE, EVEN IF ADVISED OF THE POSSIBILITY OF SUCH DAMAGE.

Julian Seward, jseward@bzip.org

bzip2/libbzip2 version 1.0.5 of 10 December 2007

University of Illinois / NCSA Open Source License

Copyright (c) 1999-2007, The Board of Trustees of the University of Illinois All Rights Reserved.

Component Name	License
iperf-2.0.5	University of Illinois / NCSA Open Source

Iperf performance test

Mark Gates

Ajay Tirumala

Jim Ferguson

Jon Dugan

Feng Qin

Kevin Gibbs

John Estabrook

National Laboratory for Applied Network Research

National Center for Supercomputing Applications

University of Illinois at Urbana-Champaign

http://www.ncsa.uiuc.edu

Permission is hereby granted, free of charge, to any person obtaining a copy of this software (Iperf) and associated documentation files (the "Software"), to deal in the Software without restriction, including without limitation the rights to use, copy, modify, merge, publish, distribute, sublicense, and/or sell copies of the Software, and to permit persons to whom the Software is furnished to do so, subject to the following conditions:

Redistributions of source code must retain the above copyright notice, this list of conditions and the following disclaimers.

Redistributions in binary form must reproduce the above copyright notice, this list of conditions and the following disclaimers in the documentation and/or other materials provided with the distribution.

Neither the names of the University of Illinois, NCSA, nor the names of its contributors may be used to endorse or promote products derived from this Software without specific prior written permission. THE SOFTWARE IS PROVIDED "AS IS", WITHOUT WARRANTY OF ANY KIND, EXPRESS OR IMPLIED, INCLUDING BUT NOT LIMITED TO THE WARRANTIES OF MERCHANTABILITY, FITNESS FOR A PARTICULAR PURPOSE AND NONINFRINGEMENT. IN NO EVENT SHALL THE CONTIBUTORS OR COPYRIGHT HOLDERS BE LIABLE FOR ANY CLAIM, DAMAGES OR OTHER LIABILITY, WHETHER IN AN ACTION OF CONTRACT, TORT OR OTHERWISE, ARISING FROM, OUT OF OR IN CONNECTION WITH THE SOFTWARE OR THE USE OR OTHER DEALINGS IN THE SOFTWARE.

PHP 3.01 License

The PHP License, version 3.01 Copyright (c) 1999 - 2010 The PHP Group. All rights reserved.

Component Name	License	URL
php-5.2.17	PHP 3.01	http://www.php.net/distributions

Redistribution and use in source and binary forms, with or without modification, is permitted provided that the following conditions are met:

1. Redistributions of source code must retain the above copyright notice, this list of conditions and the following disclaimer.

2. Redistributions in binary form must reproduce the above copyright notice, this list of conditions and the following disclaimer in the documentation and/or other materials provided with the distribution.

3. The name "PHP" must not be used to endorse or promote products derived from this software without prior written permission. For written permission, please contact group@php.net.

4. Products derived from this software may not be called "PHP", nor may "PHP" appear in their name, without prior written permission from group@php.net. You may indicate that your software works in conjunction with PHP by saying "Foo for PHP" instead of calling it "PHP Foo" or "phpfoo"

5. The PHP Group may publish revised and/or new versions of the license from time to time. Each version will be given a distinguishing version number. Once covered code has been published under a particular version of the license, you may always continue to use it under the terms of that version. You may also choose to use such covered code under the terms of any subsequent version of the license published by the PHP Group. No one other than the PHP Group has the right to modify the terms applicable to covered code created under this License.

6. Redistributions of any form whatsoever must retain the following acknowledgment: "This product includes PHP software, freely available from <http://www.php.net/software/>".

THIS SOFTWARE IS PROVIDED BY THE PHP DEVELOPMENT TEAM ``AS IS'' AND ANY EXPRESSED OR IMPLIED WARRANTIES, INCLUDING, BUT NOT LIMITED TO, THE IMPLIED WARRANTIES OF MERCHANTABILITY AND FITNESS FOR A PARTICULAR PURPOSE ARE DISCLAIMED. IN NO EVENT SHALL THE PHP DEVELOPMENT TEAM OR ITS CONTRIBUTORS BE LIABLE FOR ANY DIRECT, INDIRECT, INCIDENTAL, SPECIAL, EXEMPLARY, OR CONSEQUENTIAL DAMAGES (INCLUDING, BUT NOT LIMITED TO, PROCUREMENT OF SUBSTITUTE GOODS OR SERVICES; LOSS OF USE, DATA, OR PROFITS; OR BUSINESS INTERRUPTION) HOWEVER CAUSED AND ON ANY THEORY OF LIABILITY, WHETHER IN CONTRACT, STRICT LIABILITY, OR TORT (INCLUDING NEGLIGENCE OR OTHERWISE) ARISING IN ANY WAY OUT OF THE USE OF THIS SOFTWARE, EVEN IF ADVISED OF THE POSSIBILITY OF SUCH DAMAGE.

This software consists of voluntary contributions made by many individuals on behalf of the PHP Group. The PHP Group can be contacted via Email at group@php.net.

For more information on the PHP Group and the PHP project, please see <http://www.php.net>. PHP includes the Zend Engine, freely available at <http://www.zend.com>.

zlib / libpng License

This software is provided 'as-is', without any express or implied warranty. In no event will the authors be held liable for any damages arising from the use of this software.

Component Name	License	URL
zlib-1.2.8	zlib / libpng	http://zlib.net/

Copyright (C) 1995-2010 Jean-loup Gailly and Mark Adler

Permission is granted to anyone to use this software for any purpose, including commercial applications, and to alter it and redistribute it freely, subject to the following restrictions:

1. The origin of this software must not be misrepresented; you must not claim that you wrote the original software. If you use this software in a product, an acknowledgment in the product documentation would be appreciated but is not required.

2. Altered source versions must be plainly marked as such, and must not be misrepresented as being the original software.

3. This notice may not be removed or altered from any source distribution.

Jean-loup Gailly Mark Adler

jloup@gzip.org madler@alumni.caltech.edu

The data format used by the zlib library is described by RFCs (Request for Comments) 1950 to 1952 in the files http://www.ietf.org/rfc/rfc1950.txt (zlib format), rfc1951.txt (deflate format) and rfc1952.txt (gzip format).

eco
RoHS compliant

Hanwha Visionでは環境保護のため、製品製造の全工程で環境に配慮しており、より環境に優しい製品をお客様にお届けするため数多くの措置を講じています。
エコマークは、環境に優しい製品を創り出すHanwha Visionの意志を表すとともに、それらの製品が欧州RoHS指令に準拠していることを示しています。

Hanwha Vision