Hanwha Vision

네트워크 카메라

제품 사용 설명서

QND-7010R/7020R/7030R
QNO-7010R/7020R/7030R
QNV-7010R/7020R/7030R

A급 기기(업무용 방송통신기자재)

이 기기는 업무용(A급) 전자파적합기기로서 판매자 또는 사용자는 이 점을 주의하시기 바라며, 가정외의 지역에서 사용하는 것을 목적으로 합니다.
https://www.HanwhaVision.com

본 제품은 대한민국에서만 사용하도록 만들어져 있으며, 해외에서는 품질을 보증하지 않습니다.
FOR KOREA UNIT STANDARD ONLY

네트워크 카메라
제품 사용 설명서

Copyright
©2017 Hanwha Vision Co., Ltd. All rights reserved.

Trademark
여기에 기재된 상표는 모두 등록된 것으로 이 매뉴얼에 기재된 이 상품의 이름과 다른 상표는 각 회사로부터 등록된 상표입니다.

Restriction
이 문서는 저작권에 의해 보호됩니다. 어떠한 경우에도, 공식적인 동의 없이 이 문서의 전체 혹은 부분을 복제, 배포, 수정할 수 없습니다.

Disclaimer
한화비전㈜은 이 문서에 수록된 정보의 완결성과 정확성을 검증하기 위해 최대한 노력하였으나 이에 대해 보증하지는 않습니다. 문서의 사용 결과에 따른 책임은 전적으로 사용자에게 있습니다. **한화비전㈜**은 사전 예고 없이 이 문서의 내용을 변경할 수 있습니다.

Warranty
정상적인 사용 조건에서 제품을 운용했음에도 제품이 제대로 동작하지 않을 경우, **한화비전㈜**에서 무료로 수리해 드립니다. 보증 기간은 3년이며, 다음과 같은 상황은 보증에서 제외됩니다.

- 시스템 운용과 관련 없는 프로그램을 실행하여 시스템이 잘못된 동작을 한 경우
- 시간 경과에 따른 제품의 변화 또는 사용 중 자연적 마모에 의한 이상

❖ **제품의 외관, 사양등은 성능 개선을 위해 예고 없이 변경될 수 있습니다.**

❖ **최초 관리자 ID는 “admin”이며, 비밀번호는 최초 로그인 시 설정해야 합니다.
안전하게 개인정보를 보호하고, 개인정보도용 피해를 예방하기 위해 3개월 마다 주기적으로 비밀번호를 변경하세요.
부주의한 비밀번호 관리로 인한 보안 및 기타 문제의 책임은 사용자에게 있으므로 각별히 주의하세요.**

안전을 위한 주의사항

제품을 올바르게 사용하여 위험이나 재산상의 피해를 미리 막기 위한 내용이므로 반드시 지켜 주시기 바랍니다.

경 고 지키지 않았을 경우 사용자가 사망하거나 중상을 입을 수 있습니다.	**주 의** 지키지 않았을 경우 사용자가 부상을 당하거나 재산상의 손해를 입을 수 있습니다.

전원 관련

경 고

전원 및 신호선 연결 시 외부 연결 단자를 확인하고 연결하세요. **알람 단자에는 알람 신호선을 연결하고, DC 전원 입력 단자는 극성을 확인하여 DC 어댑터를 올바르게 연결하세요.** 전원을 잘못 연결하면 화재, 감전, 고장의 원인이 됩니다.	**연기가 나거나 이상한 냄새가 날 때는 사용을 중단하세요.** **이때는 곧바로 전원을 분리 후 서비스 센터에 연락 해주세요.** 그대로 계속 사용하면 화재, 감전의 원인이 됩니다.	

주 의

전원 연결단자에 전원선을 확실히 고정 후 사용하세요. 접속이 불완전한 경우는 화재의 원인이 됩니다.		

설치 관련

경 고

반드시 본 제품 구입 시 제공된 어댑터를 사용하세요. 화재, 감전, 고장의 원인이 됩니다.	**천둥, 번개가 치면 카메라에 문제가 생길 수 있습니다.** 설치 시 접지 등 낙뢰에 의한 파손이 최소화될 수 있도록 주의하세요.	

주 의

카메라를 벽이나 천장 등에 설치 시 안전하고 확실하게 고정하세요. 낙하로 인한 부상의 원인이 됩니다.	**카메라 위에 전도성 물질(드라이버, 동전, 쇠붙이 등) 및 물이 차있는 용기 등을 놓지 마세요.** 화재, 감전, 낙하로 인한 상해의 원인이 됩니다.	**하나의 어댑터에 여러대의 카메라를 연결해서 사용하지 마세요.** 용량 초과 시 이상 발열 및 화재의 원인이 됩니다.
카메라 설치/분리시 보호용 장갑을 착용하세요. 제품 표면의 고온에 의한 화상의 원인이 됩니다.	**무리한 힘을 가하여 억지로 제품을 설치할 경우 오동작으로 인해 카메라에 손상을 줄 수 있습니다.** 규격에 맞지 않는 도구를 사용하여 강제로 조립할 경우 제품이 파손될 수 있습니다.	**제품이 설치되는 장소에 화학 물질 또는 유증기가 있거나 발생될 수 있을 경우 제품을 설치하지 마세요.** **콩기름과 같은 식용 기름 성분도 제품의 파손 및 변형을 유발할 수 있으므로, 주방 또는 조리대 근처에는 설치하지 마세요.** 제품 손상의 원인이 될 수 있습니다.
제품 설치시 화학 물질이 제품 표면에 묻지 않도록 주의하세요. 일부 세척제나 접착 성분과 같은 화학 용제는 제품 표면에 치명적인 손상을 줄 수 있습니다.	**당사에서 권장하지 않는 방법으로 제품을 설치/분해하는경우 제품의 기능/성능을 보장할수 없습니다.** **제품 사용 설명서의 "설치 및 연결"을 참조하여 설치하세요.**	**제품을 물 속에서 설치 또는 사용할 경우 제품의 심각한 고장을 일으킬 수 있습니다.**

참 고

습기 먼지나 그을음 등이 많은 장소에 설치하지 마세요. 화재, 감전의 원인이 됩니다.	**제품에 물건을 떨어뜨리거나 충격을 주지 마세요. 진동이 심한 곳이나 자석종류가 있는 곳으로부터 멀리해 주세요.**	**온도가 너무 높은 곳(55°C 이상) 이나 낮은 곳, 습도가 높은 곳에 설치하지 마세요.** 화재, 감전의 원인이 됩니다.
직사광선이 들어오는 곳이나 난방기구 등 열이 나는 곳을 피해주세요. 화재, 감전의 원인이 됩니다.	**설치된 제품을 이동하고자 할 때에는 반드시 전원을 끄고 옮기거나 재설치 하세요.** 화재, 감전의 원인이 됩니다.	**바람이 잘 통하는 곳에 설치하세요.** 화재 및 고장의 원인이 될 수 있습니다.

청소 관련

참 고

청소 시 제품의 각 부분에 직접 물을 뿌리지 마세요. 화재, 감전의 원인이 됩니다.	**제품 표면은 깨끗하고 부드러운 마른 헝겊으로 오염 부위를 닦거나 부드러운 마른 헝겊에 물을 적셔 물이 흐르지 않도록 꼭 짠 후에 오염 부분을 닦으세요.** 알코올, 솔벤트가 함유되거나, 계면활성제가 함유된 세제, 화장품류, 기름 성분등은 제품의 파손 및 변형을 유발할수 있으니 사용하지 마세요.	

목차

개요 3

3 안전을 위한 주의사항
5 설치 및 사용상의 주의
5 PC 시스템 권장 사양
5 Micro SD/SDHC/SDXC 메모리 카드 권장 사양
5 NAS 권장 사양
6 구성품 확인하기
7 각 부분의 명칭 및 기능 (QND-7010R/7020R/7030R)
9 각 부분의 명칭 및 기능 (QNO-7010R/7020R/7030R)
10 각 부분의 명칭 및 기능 (QNV-7010R/7020R/7030R)

설치 및 연결 12

12 설치하기 (QND-7010R/7020R/7030R)
13 설치하기 (QNO-7010R/7020R/7030R)
14 설치하기 (QNV-7010R/7020R/7030R)
17 Micro SD 메모리 카드 넣기/빼기
18 메모리 카드 정보 (별매품)
19 다른 기기와 연결하기

네트워크 연결 및 설정 22

22 LAN 환경에서 직접 카메라 설치하기
22 DHCP 방식의 DSL/Cable 모뎀에 직접 카메라 설치하기
23 PPPoE 모뎀에 직접 카메라 설치하기
23 PPPoE/Cable 모뎀을 연결한 IP 공유기에 카메라 설치하기
24 디바이스 매니저 사용하기
24 자동으로 카메라 검색하기
24 IP주소 설정하기
25 수동으로 카메라 등록하기
25 자동으로 IP 설정하기
26 포트 포워딩 (포트 맵핑) 설정하기
27 공유된 로컬 PC에서 카메라 접속하기
27 외부의 원격 PC에서 인터넷으로 카메라에 접속하기

웹뷰어 28

28 카메라에 접속하기
29 비밀번호 설정하기
29 로그인하기
29 카메라 웹뷰어 설정하기

부록 30

30 문제 해결하기
31 Open Source Announcement

설치 및 사용상의 주의

- 사용자 임의로 카메라를 분해하지 마세요.
- 카메라 취급 시 항상 주의하세요.
- 카메라를 주먹으로 치거나 흔들지 않도록 하고 부주의한 보관이나 오동작으로 카메라에 손상을 입히지 않도록 주의하세요.
- 카메라를 비가 오는 장소나 습기가 많은 장소에 설치하지 않도록 주의하고 젖은 장소에 두고 동작하지 마세요.
- 제품 표면은 깨끗하고 부드러운 마른 헝겊으로 오염 부위를 닦거나 부드러운 마른 헝겊에 물을 적셔 물이 흐르지 않도록 꼭 짠 후에 오염 부분을 닦으세요.
  (알코올, 솔벤트가 함유되거나, 계면활성제가 함유된 세제, 화장품류, 기름 성분 등은 제품의 파손 및 변형을 유발할 수 있으니 사용하지 마세요.)
- 카메라를 직사광선이 비치지 않는 서늘한 곳에 설치하세요.
  직사광선이 비치는 곳에 두면 제품에 좋지 않은 영향을 줄 수 있습니다.
- 무리한 힘을 가하여 억지로 제품을 설치 할 경우 오동작으로 인해 카메라에 손상을 줄 수 있습니다.
  규격에 맞지 않는 도구를 사용하여 강제로 조립할 경우 제품이 파손될 수 있습니다.
- 제품이 설치되는 장소에 화학 물질 또는 유증기가 있거나 발생될 수 있을 경우 제품을 설치하지 마세요.
  콩기름과 같은 식용 기름 성분도 제품의 파손 및 변형을 유발할 수 있으므로, 주방 또는 조리대 근처에는 설치하지 마세요. 제품 손상의 원인이 될 수 있습니다.
- 제품 설치시 화학 물질이 제품 표면에 묻지 않도록 주의하세요.
  일부 세척제나 접착 성분과 같은 화학 용제는 제품 표면에 치명적인 손상을 줄 수 있습니다.
- 제품을 물 속에서 설치 또는 사용할 경우 제품의 심각한 고장을 일으킬 수 있습니다.
- Micro SD 메모리 카드를 구부리거나 던지지 마세요.
- 온도가 높은 곳, 습기가 많은 곳, 먼지가 많은 곳에 Micro SD 메모리 카드를 보관하거나 사용하지 마세요.
- Micro SD 메모리 카드 단자에 이물질이 묻지 않도록 주의하세요.
  이물질이 묻은 경우에는 부드러운 헝겊으로 닦아주세요.
- Micro SD 메모리 카드를 빼기 전 <**저장**>에서 장치를 <**사용 안** 함>으로 설정하고 [**적용**] 버튼을 누른 후 카메라 전원을 끄세요. (54쪽)
- Micro SD 메모리 카드의 수명이 다하면 데이터가 저장되지 않습니다.
  이러한 경우에는 Micro SD 메모리 카드를 새로 구입하세요.
- 본 제품을 설치하기 전 또는 사용 중에 한화비전 웹 사이트 https://www.HanwhaVision.com 을 방문하셔서 최신 S/W 버전을 확인하시고 다운로드하여 업데이트하세요.
- 보안강화를 위하여 특수문자, 숫자, 영문 대문자, 소문자 중 다양한 조합으로 비밀번호를 설정하여 사용하시기를 권장합니다.
- 당사에서 권장하지 않는 방법으로 제품을 설치/분해하는경우 제품의 기능/성능을 보장할수 없습니다.
  제품 사용 설명서의 “설치 및 연결”을 참조하여 설치하세요.
- 특정한 설치 환경에서 무선 통신에 간섭이 발생할 수 있습니다. 제품과 주변 무선통신 장비 간 전자파 간섭이 발생하는 경우, 무선통신 장비와 거리를 넓히거나 통신용 안테나 방향을 조정하는 것을 권장합니다.

eco
RoHS compliant

한화비전은 지구환경보전을 위하여 제품과 관련된 전 과정에서 환경을 고려하고 있으며, 고객에게 보다 친환경적인 제품을 제공하기 위하여 다양한 활동을 추진하고 있습니다.
에코(Eco)마크는 친 환경제품을 만들기 위한 한화비전의 의지이며, 유럽의 환경규제(RoHS)에 만족하는 제품임을 의미합니다.

PC 시스템 권장 사양

- CPU : Intel(R) Core(TM) i7 3.4 GHz 이상
- 지원 OS : Windows 7, 8.1, 10, Mac OS X 10.9, 10.10, 10.11
- **플러그인 프리 웹뷰어**
  지원 브라우저 : Google Chrome 47, MS Edge 20
- **플러그인 웹뷰어**
  지원 브라우저 : MS Explorer 11, Mozilla Firefox 43, Apple Safari 9 ※ Mac OS X only
- VGA : PCIe를 지원하는 256MB 이상의 비디오 GDDR3 이상의 메모리를 지원하는 그래픽 카드

Micro SD/SDHC/SDXC 메모리 카드 권장 사양

- 권장 용량 : 4GB ~ 128GB (uhs-1 class)
- 본 카메라는 다음과 같은 제조사의 메모리 카드 사용을 권장합니다.
  Micro SD/SDHC/SDXC 메모리 카드 : Sandisk, Transcend

NAS 권장 사양

- 권장 용량 : 200GB 이상을 권장합니다.
- 본 카메라는 다음과 같은 제조사의 NAS 사용을 권장합니다.
  권장 제품: QNAP NAS, Synology NAS

구성품 확인하기

다음의 구성품이 모두 포함되어 있는지 확인하세요.
(부속 액세서리는 판매국에 따라 다를 수 있습니다.)

외관	품명	수량	용도	모델명
	카메라	1		QND-7010R/7020R /7030R
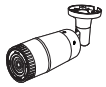		1		QNO-7010R/7020R /7030R
		1		QNV-7010R/7020R /7030R
	퀵가이드	1		전 모델 공용
	전원 어댑터 (DC12V / 1.8A)	1	전원 연결시 사용	전 모델 공용
	전원코드	1	전원 어댑터에 연결	전 모델 공용
	템플릿	1	설치 작업시 가이드	전 모델 공용
	전원 터미널 블록	1	전원 단자에 꽂아 사용	QND-7010R/7020R /7030R, QNV-7010R/7020R /7030R
	머신 나사	2	PIPE, WALL MOUNT 등에 설치시 케이스의 천장 조립용, 구멍을 막는데 사용	QND-7010R/7020R /7030R, QNV-7010R/7020R /7030R

외관	품명	수량	용도	모델명
	L 렌치	1	카메라 방향 조절시 사용/ 돔 커버 분해, 조립시 사용	QNO-7010R/7020R /7030R, QNV-7010R/7020R /7030R
	태핑 나사	2	천장, 벽면 등 설치에 사용	QND-7010R/7020R /7030R, QNV-7010R/7020R /7030R
		3		QNO-7010R/7020R /7030R
	알람 케이블	1	알람 연결시 사용	QND-7010R/7020R /7030R
	RJ45 방수 액세서리	1	습기가 많은 곳에 설치시 사용	QNO-7010R/7020R /7030R
	선쉴드	1	직사광선을 차단	QNO-7010R/7020R /7030R
	선쉴드 홀드	1	선쉴드를 카메라에 고정	QNO-7010R/7020R /7030R
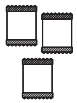	카드형 흡습제	3	설치시 부착	QNO-7010R/7020R /7030R
		1		QNV-7010R/7020R /7030R

외관	품명	수량	용도	모델명
	전원 케이블	1	전원 단자에 연결시 사용	QNV-7010R/7020R /7030R
	오디오/알람 케이블	1	오디오 및 알람 연결시 사용	QNV-7010R/7020R /7030R
	케이블 부시	1	직경 Ø7~8.5 규격 LAN 케이블 연결시 사용	QNV-7010R/7020R /7030R
	플라스틱 앵커	2	설치 장소 나사 체결용, 구멍에 삽입 (설치 강도 보강용)	QNV-7010R/7020R /7030R
옵션 (별도 구매품)				
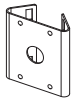	폴마운트 브라켓		원통형 폴 설치용 브라켓	QNO-7010R/7020R /7030R

각 부분의 명칭 및 기능 (QND-7010R/7020R/7030R)

외부

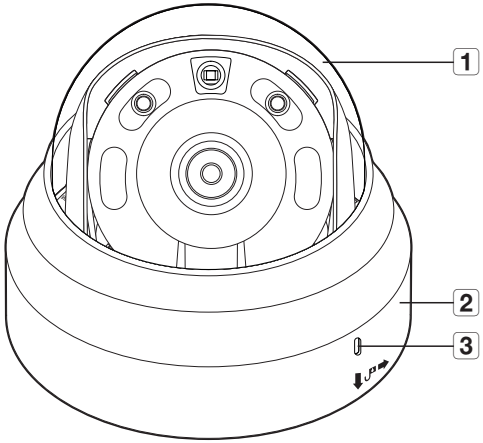

명칭	기능설명
1 돔 커버	렌즈 및 내부 본체를 보호하기 위해 씌우는 커버입니다.
2 카메라 케이스	카메라 본체 및 카메라 바디를 포함하고 있는 부위입니다.
3 마이크 홀	마이크가 내장되어 있습니다.

내부 구성

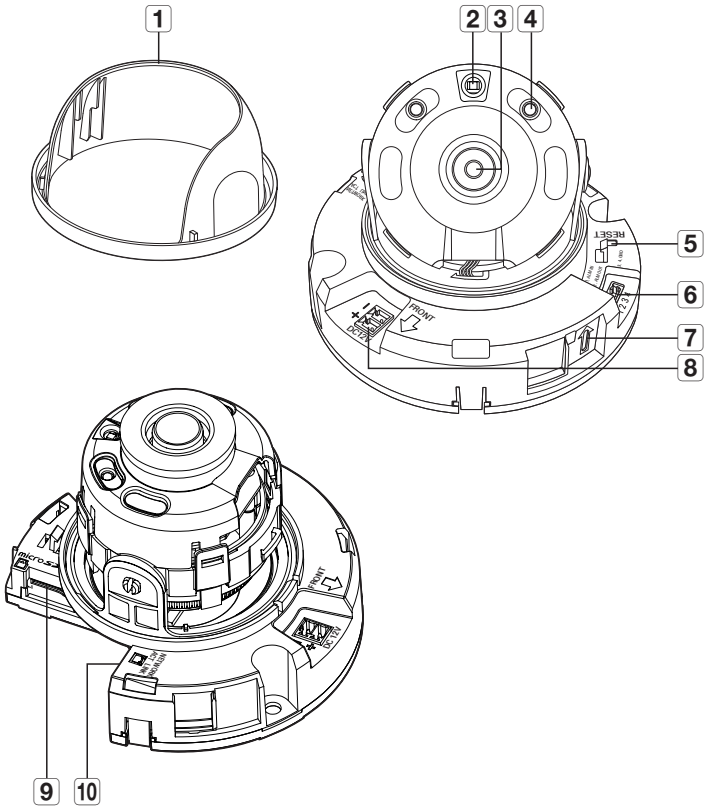

명칭		기능설명	
1	내측커버	본체를 보호하기 위해 씌우는 커버입니다.	
2	조도 센서	수신되는 빛을 감지하여 IR LED를 제어합니다.	
3	렌즈	카메라 렌즈입니다.	
4	IR LED	조도 센서에 의해 제어되는 적외선 LED입니다.	
5	초기화 버튼	카메라의 설정을 공장 값으로 초기화하는 버튼입니다. 약 5초간 누르면 재부팅됩니다. ! 카메라를 초기화하면 네트워크 설정은 DHCP를 사용하도록 변경됩니다. 네트워크 내에 DHCP 서버가 없는 경우는, 디바이스 매니저 프로그램을 이용해 기본적인 네트워크 설정(IP Address, Subnet Mask, Gateway 등)을 다시 해야 접속이 가능합니다.	
6	알람 입출력 단자	ALARM IN	알람 입력 센서 혹은 외부 주아간 센서를 연결하는 단자입니다.
		ALARM OUT	알람 출력신호를 연결하는 단자입니다.
		GND	알람 입/출력신호를 연결하는 공통 단자입니다.
7	마이크 홀	마이크가 내장되어 있습니다.	
8	전원 연결 단자	전원 터미널 블록과 연결하는 단자입니다.	
9	Micro SD 카드 삽입구	Micro SD 카드를 삽입하는 단자입니다.	
10	네트워크 연결 단자	PoE나 이더넷 케이블을 통하여 네트워크와 연결하는 단자입니다.	

각 부분의 명칭 및 기능 (QNO-7010R/7020R/7030R)

외관

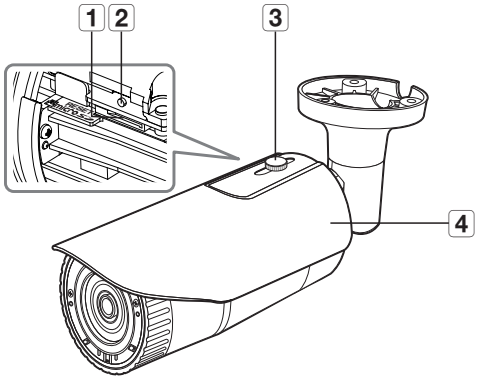

명칭	기능설명
1 Micro SD 카드 삽입구	(제품내부) Micro SD 카드를 삽입하는 단자입니다.
2 초기화 버튼	카메라의 설정을 공장 값으로 초기화하는 버튼입니다. 약 5초간 누르면 재부팅됩니다. ! 카메라를 초기화하면 네트워크 설정은 DHCP를 사용하도록 변경됩니다. 네트워크 내에 DHCP 서버가 없는 경우는, 디바이스 매니저 프로그램을 이용해 기본적인 네트워크 설정(IP Address, Subnet Mask, Gateway 등)을 다시 해야 접속이 가능합니다.
3 선쉴드 홀드	선쉴드를 카메라에 고정시키는 역할을 합니다.
4 선쉴드	직사광선을 차단하는 역할을 합니다.

- 카메라의 렌즈 표면이 더러워지면 렌즈용 티슈나 면 헝겊에 에탄올을 묻혀서 렌즈 표면을 부드럽게 닦아 내세요.

구성

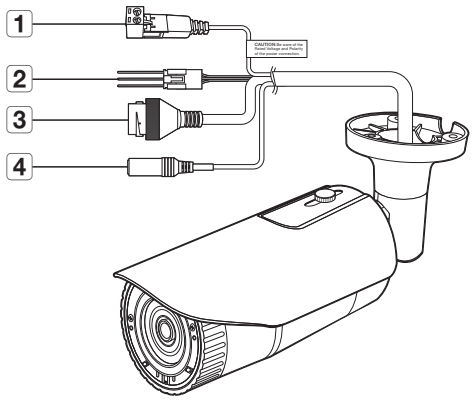

명칭	기능설명	
1 전원 연결 단자	전원 케이블과 연결하는 단자입니다.	
2 알람 입출력 단자	ARM-OUT	알람 출력신호를 연결하는 단자입니다.
	GND	알람 입/출력신호를 연결하는 공통 단자입니다.
	ARM-IN	알람 입력 센서 혹은 외부 주야간 센서를 연결하는 단자입니다.
3 네트워크 연결 단자	PoE나 이더넷 케이블을 통하여 네트워크와 연결하는 단자입니다.	
4 오디오 입력 단자	마이크와 연결하는 단자입니다.	

각 부분의 명칭 및 기능 (QNV-7010R/7020R/7030R)

외부

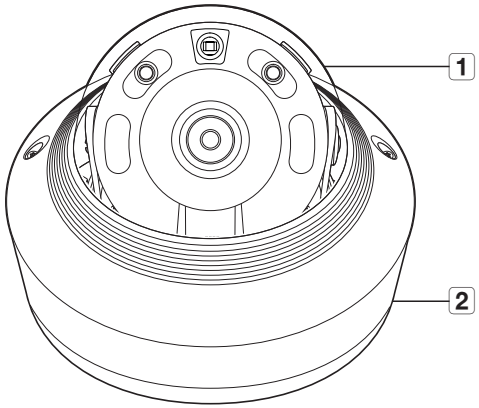

명칭	기능설명
1 돔 커버	렌즈 및 내부 본체를 보호하기 위해 씌우는 커버입니다.
2 카메라 케이스	카메라 본체 및 카메라 바디를 포함하고 있는 부위입니다.

내부 구성

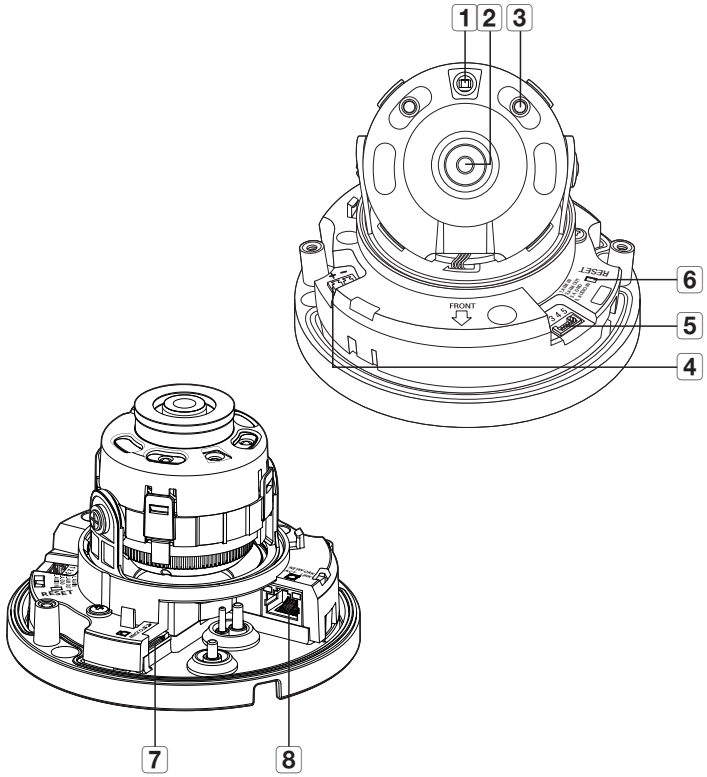

명칭	기능설명
1 조도 센서	수신되는 빛을 감지하여 IR LED를 제어합니다.
2 렌즈	카메라 렌즈입니다.
3 IR LED	조도 센서에 의해 제어되는 적외선 LED입니다.
4 전원 연결 단자	전원 터미널 블록과 연결하는 단자입니다.
5 오디오 및 알람 케이블 연결 단자	오디오 및 알람 케이블을 연결하여 외부 알람 기기/마이크와 연결하는 단자입니다.
6 초기화 버튼	카메라의 설정을 공장 값으로 초기화하는 버튼입니다. 약 5초간 누르면 재부팅됩니다. ! 카메라를 초기화하면 네트워크 설정은 DHCP를 사용하도록 변경됩니다. 네트워크 내에 DHCP 서버가 없는 경우는, 디바이스 매니저 프로그램을 이용해 기본적인 네트워크 설정(IP Address, Subnet Mask, Gateway 등)을 다시 해야 접속이 가능합니다.
7 Micro SD 메모리 카드 삽입구	Micro SD 메모리 카드를 삽입하는 단자입니다.
8 네트워크 연결 단자	PoE나 이더넷 케이블을 통하여 네트워크와 연결하는 단자입니다.

설치하기 (QND-7010R/7020R/7030R)

설치 전 유의사항

카메라를 설치하기 전, 아래의 주의 사항들을 반드시 숙지하세요.

- 설치 브라켓을 포함한 카메라 무게의 5배를 견딜 수 있는 장소(천장이나 벽)에 설치하셔야 합니다.
- 케이블이 부적절한 곳에 끼이거나 전선의 피복이 손상될 경우 제품의 손상이나 화재로 이어질 수 있으므로 주의하세요.
- 카메라를 설치할 때, 다른 사람이 설치 장소에 접근하는 일이 없도록 해야 합니다.
  그리고 귀중품이 아래에 놓여 있다면 즉시 치우세요.

분리하기

1. 카메라의 바닥 부분을 한 손으로 잡고 다른 손으로 커버를 잡은 후 반시계 방향으로 회전시켜 커버를 분리하세요.

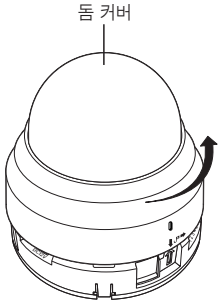

2. 내측 커버를 위로 올려서 분리하세요.

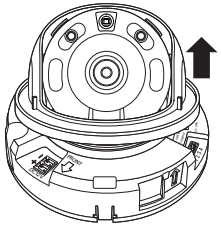

설치하기

1. 원하는 장소에 설치용 템플릿을 부착하고, 홀 3개소를 그림과 같은 크기로 뚫으세요.

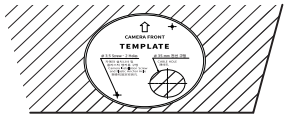

2. 제공된 두 개의 태핑 나사를 사용하여 템플릿으로 뚫은 홀 2개소에 카메라를 고정시키세요.
   - 카메라에 각인되어 있는 < ⇧ > 표시가 카메라가 감시할 방향을 바라보도록 하세요.
3. 카메라 내부의 단자와 필요한 케이블을 연결하세요.
4. "**카메라의 감시방향 조정하기**"를 참고하여 렌즈를 원하는 방향으로 조정하세요. (16쪽)

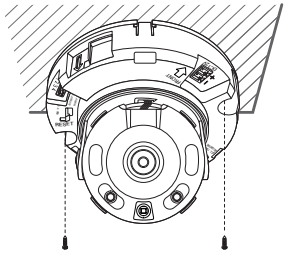

- 제조 완성 검사 시 초점 조정 완료 상태로 공장 출하되므로 별도로 렌즈를 만지지 않을 것을 권장합니다.
  초점이 틀어지거나 렌즈에 이물질이 묻을 우려가 있습니다.

5. 내측 커버를 본체에 결합하세요.
6. 카메라의 바닥 부분을 한 손으로 잡고 다른 손으로 커버를 잡은 후 그림과 같이 화살표 방향을 일치시켜 누르세요.

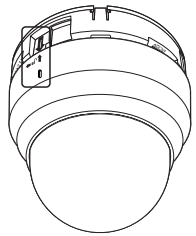

- 돔 커버 조립시 화살표를 일치시킨 후 강하게 눌러 조립하세요.
  돔 커버를 회전하여 조립하거나 정확히 조립하지 않을 경우 난반사 현상이 발생하거나 렌즈 부분이 회전하여 촬영 범위가 변경될 수 있습니다.
- 그림과 같이 돔 커버가 바닥 부분에 정확히 체결되었는지 확인하세요.
  Snap-fit이 정확히 체결되지 않을 경우, 돔 커버 낙하로 인한 부상의 위험이 있습니다.

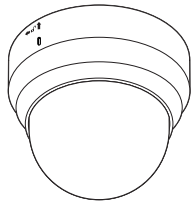

설치하기 (QNO-7010R/7020R/7030R)

- 본 카메라는 IP66 규격으로 방수제품이지만, 외부 케이블에 연결되는 잭 부분은 방수가 되지 않습니다. 본 제품 설치 시 케이블 외부 노출 방지를 위하여 지붕 처마 밑 설치를 권장합니다.

설치 전 유의사항

카메라를 설치하기 전, 아래의 주의 사항들을 반드시 숙지하세요.

- 설치 브라켓을 포함한 카메라 무게의 5배를 견딜 수 있는 장소(천장이나 벽)에 설치하셔야 합니다.
- 케이블이 부적절한 곳에 끼이거나 전선의 피복이 손상될 경우 제품의 손상이나 화재로 이어질 수 있으므로 주의하세요.
- 카메라를 설치할 때, 다른 사람이 설치 장소에 접근하는 일이 없도록 해야 합니다.
  그리고 귀중품이 아래에 놓여 있다면 즉시 치우세요.

설치하기

1. 원하는 장소에 설치용 템플릿을 부착하고, 홀 3개소를 그림과 같은 크기로 뚫으세요.

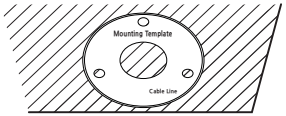

2. 제공된 3개의 태핑나사를 사용하여 홀 3개소에 카메라를 고정시키세요.
3. 카메라 단자와 필요한 케이블을 연결하세요.

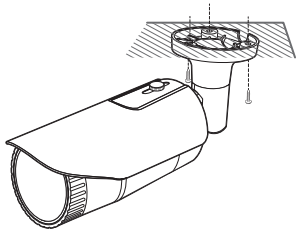

4. 제공된 L 렌치를 사용하여 카메라의 방향을 조절하세요.

- 브라켓을 이용하여 카메라 위치 조정시 브라켓 스크류를 풀어서 조정후 체결하세요. 스크류가 체결된 상태에서 무리하게 조정하면 긁힘 발생 및 고장의 원인이 될 수 있습니다.

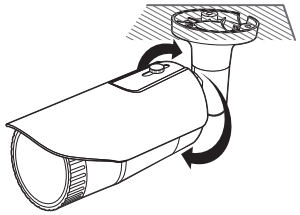

RJ45 방수 케이블과 LAN 케이블 연결하기

1. LAN 케이블을 화살표 방향으로 통과하세요.

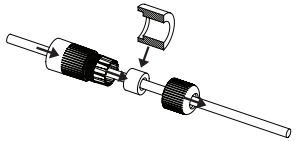

2. LAN 커넥터(수)와 케이블을 연결하세요.

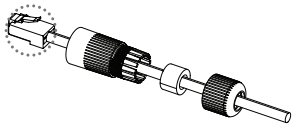

3. RJ45 모듈러 잭(암)과 RJ45 커넥터(수)를 연결하세요.

- 각각의 부품들은 분리된 상태를 유지하세요.

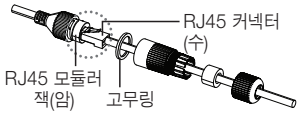

4. RJ45 모듈러 잭(암)과 RJ45 보호 커버를 시계방향(화살표)으로 회전시켜 조립하세요.

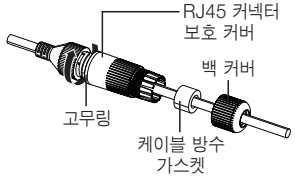

5. RJ45 커넥터 보호 커버와 백 커버를 시계방향(화살표)으로 회전시켜 조립하세요.
   백 커버 조립 시 케이블 방수 가스켓이 케이블에 압착되어 방수 기능을 하게 됩니다.

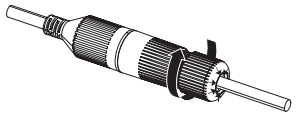

- RJ45 커넥터의 나사산 끝까지 백 커버를 회전시켜 완전히 조립해야 합니다.

옥외 설치하기

건물 외부 설치시 외부에서 연결된 케이블의 틈으로 누수될 우려가 있으므로 다음과 같이 시중에 판매하는 방수 부틸 고무 테이프로 방수처리 바랍니다.

1. 전원, I/O, 오디오, LAN 등의 케이블을 연결하세요.
2. 검은색 케이블 자켓 (A부분)을 포함하여 케이블 연결부까지 부틸 고무 테이프의 반 이상이 겹치도록하여 방수 테이프를 감아주세요.

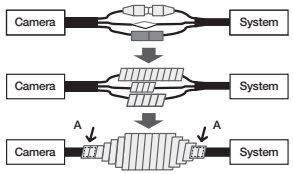

- 연결된 케이블 자켓 부분의 방수처리가 미흡하면 직접적인 누수 원인이 되므로 특히 촘촘하게 테이핑하여 주시기 바랍니다.
- 방수용 부틸 고무 테이프는 원래 길이의 2배 이상 늘어나는 부틸 고무 소재입니다.

설치하기 (QNV-7010R/7020R/7030R)

- 본 카메라는 IP66 규격으로 방수제품이지만, 외부 케이블에 연결되는 잭 부분은 방수가 되지 않습니다. 본 제품 설치 시 케이블 외부 노출 방지를 위하여 지붕 처마 밑 설치를 권장합니다.

설치 전 유의사항

카메라를 설치하기 전, 아래의 주의 사항들을 반드시 숙지하세요.

- 설치 브라켓을 포함한 카메라 무게의 5배를 견딜 수 있는 장소(천장이나 벽)에 설치하셔야 합니다.
- 케이블이 부적절한 곳에 끼이거나 전선의 피복이 손상될 경우 제품의 손상이나 화재로 이어질 수 있으므로 주의하세요.
- 카메라를 설치할 때, 다른 사람이 설치 장소에 접근하는 일이 없도록 해야 합니다. 그리고 귀중품이 아래에 놓여 있다면 즉시 치우세요.

분리하기

1. 부속으로 제공된 L 렌치를 이용하여 돔 커버의 체결용 볼트 2개를 반시계 방향으로 풀어 돔 커버를 분리하세요.

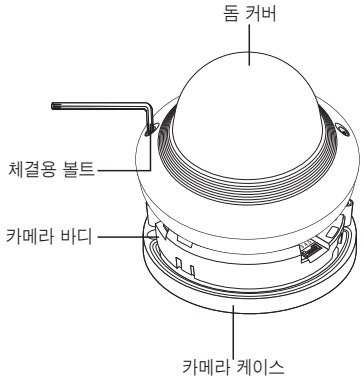

설치하기

1. 부속으로 제공된 템플릿을 이용하여 설치 나사용 구멍 (직경 6mm, 깊이 최소 55mm)을 뚫고, 부속으로 제공된 플라스틱 앵커를 끝까지 삽입하세요.
2. 플라스틱 앵커가 삽입된 구멍에 카메라의 설치용 구멍을 맞춘 후, 태핑 나사 (M4.5xL50)를 체결하세요.
3. 케이블을 연결하고, 카메라 설치 시 케이블에 손상이 가거나 끼이지 않도록 케이블을 정돈하세요.
4. "**카메라의 감시방향 조정하기**"를 참고하여 렌즈를 원하는 방향으로 조정하세요. (16쪽)
5. 돔 커버를 조립하세요.
   - 체결용 볼트는 방수에 문제가 없도록 L 렌치를 이용하여 단단히 체결하세요.

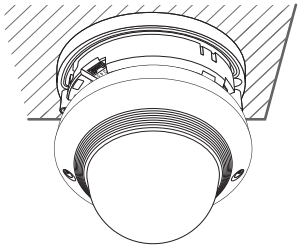

LAN 케이블 연결하기

1. 돔 커버와 케이스를 분리하세요.
2. 그림과 같이 바닥에 있는 고무 마개의 길게 돌출된 부분을 당겨서 뜯어 내세요.

- 연결하려는 LAN 케이블의 규격에 맞는 케이블 부시를 사용하세요.
  - 카메라 기본 : 직경 Ø5~6.5 케이블 사용
  - 제공 구성품 : 직경 Ø7~8.5 케이블 사용

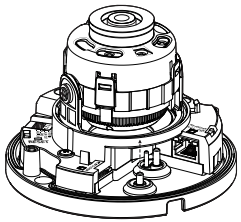

3. 2번에서 돌출된 부분을 뜯어내어 생긴 큰 홀을 통해 LAN 케이블을 집어넣으세요.
4. 케이블 커터를 이용하여 피복을 벗겨낸 다음 선들을 정렬하세요.
5. LAN 커넥터와 연결하여 LAN 툴에 넣어 집어주세요.
6. 완성된 케이블을 이더넷 단자와 연결하세요.

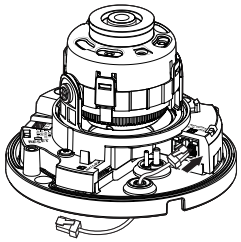

오디오/알람 케이블 및 전원 케이블 연결하기

1. 돔 커버와 케이스를 분리하세요.
2. 그림과 같이 바닥에 있는 고무 마개를 당겨서 제거하세요.

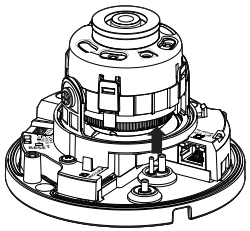

3. 2번에서 고무 마개를 제거하여 생긴 홀을 통해 알람/오디오 케이블을 집어넣고, PCB의 알람 터미널에 연결하세요.
4. 카메라 설치 시 케이블에 손상이 가거나 끼이지 않도록 케이블을 정돈하세요.
5. 알람/오디오 케이블에 있는 고무 마개를 홀에 끼우세요.

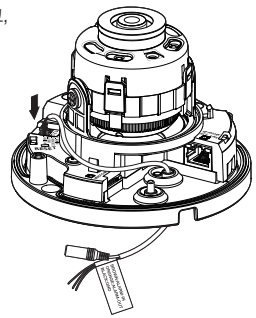

6. 작은 홀을 통해 전원 케이블을 집어넣고, 길게 파인 홈을 따라 전원 케이블을 넣으세요.
7. 전원 케이블을 전원 터미널 블록과 연결하세요.
8. "**카메라의 감시방향 조정하기**"를 참고하여 렌즈를 원하는 방향으로 조정하세요. (16쪽)
9. 돔 커버를 조립하세요.

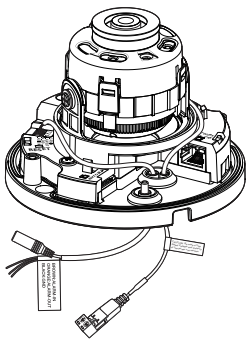

별매 어댑터에 설치하기

설치의 편리성 및 설치 장소에 따라 다음의 별매 제품을 구입하여 설치하면 편리합니다.

1. "**분리하기**"를 참고하여 돔 커버와 케이스를 분리하세요. (14쪽)
2. 카메라 케이스를 부속으로 제공된 머신 나사를 이용하여 별매 어댑터에 고정하세요.
3. 케이블을 연결하고, 카메라 설치 시 케이블에 손상이 가거나 끼이지 않도록 케이블을 정돈하세요.
4. 카메라 바디를 "**분리하기**"의 반대 순서로 조립하세요.
5. "**카메라의 감시방향 조정하기**"를 참고하여 렌즈를 원하는 방향으로 조정하세요. (16쪽)
6. 돔 커버를 조립하세요.
   - 체결용 볼트는 방수에 문제가 없도록 L 렌치를 이용하여 단단히 체결하세요.

옥외 설치하기

건물 외부 설치시 외부에서 연결된 케이블의 틈으로 누수될 우려가 있으므로 다음과 같이 시중에 판매하는 방수 부틸 고무 테이프로 방수처리 바랍니다.

1. 전원, I/O, BNC, LAN 등의 케이블을 연결하세요.
2. 검은색 케이블 자켓 (A부분)을 포함하여 케이블 연결부까지 부틸 고무 테이프의 반 이상이 겹치도록 하여 방수 테이프를 감아주세요.

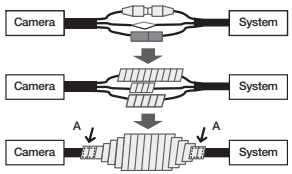

- 연결된 케이블 자켓 부분의 방수처리가 미흡하면 직접적인 누수 원인이 되므로 특히 촘촘하게 테이핑하여 주시기 바랍니다.
- 방수용 부틸 고무 테이프는 원래 길이의 2배 이상 늘어나는 부틸 고무 소재입니다.

설치 관련 별매 제품

설치의 편리성 및 설치장소에 따라 다음의 별매 제품을 구입하여 설치하면 편리합니다.

1. WALL MOUNT ADAPTOR(SBP-300WM 또는 SBP-300WM1)/ HANGING MOUNT (QND-7010R/7020R/7030R : SBP-300HM8)
   돔 카메라를 벽에 설치할 경우에 사용되는 어댑터입니다.

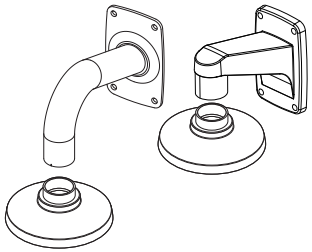

2. CEILING MOUNT ADAPTOR(SBP-300CM)/HANGING MOUNT (QND-7010R/7020R/7030R : SBP-300HM8)
   콘크리트 천장에 돔 카메라를 설치할 경우에 사용되는 어댑터입니다.

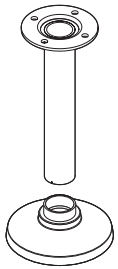

3. POLE MOUNT ADAPTOR(SBP-300PM)
   80mm이상의 원기둥에 WALL MOUNT ADAPTOR(SBP-300WM 또는 SBP-300WM1)을 설치할 때 사용되는 어댑터입니다.

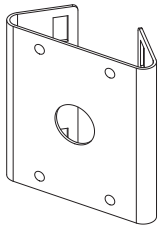

4. CORNER MOUNT ADAPTOR (SBP-300KM)
   벽의 모서리부에 WALL MOUNT ADAPTOR (SBP-300WM 또는 SBP-300WM1)을 설치할 때 사용되는 어댑터입니다.

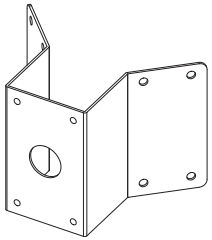

카메라의 감시방향 조정하기 (QND-7010R/7020R/7030R, QNV-7010R/7020R/7030R)

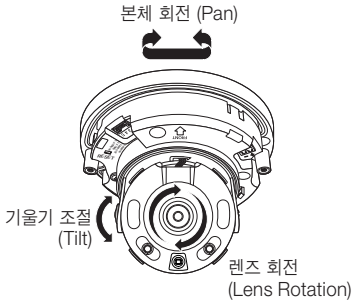

▪ 감시 방향 조정

카메라가 천장에 고정된 상태에서 카메라의 방향을 조절할 수 있습니다.
이때 카메라의 본체를 좌우로 회전시키는 것을 Pan, 기울기를 조절하는 것을 Tilt, 렌즈를 축으로 회전시키는 것을 Rotation라고 합니다.

- Pan 회전 각도는 총 350° 입니다.
- Rotation 회전 각도는 총 355° 입니다.
- Tilt 회전 각도는 총 67° 입니다.

- 일부 각도에서 카메라 케이스에 의해 상가림이 발생할 수 있습니다.
- 돔 케이스 분해 후 포커스/줌 렌즈를 강제로 회전시키지 마세요.
  모터 고장으로 포커스 불량이 발생할 수 있습니다.

▪ 조정방법

1. 카메라를 부착 후, 모니터링 할 방향을 고려하여 Pan 각도를 조정하세요.
2. Rotation 시 영상이 반전되어 나타나지 않도록 수평 각도를 맞추세요.
3. Tilt 각도를 조정하여 모니터링 할 방향으로 향하게 하세요.

Micro SD 메모리 카드 넣기/빼기

- 카메라를 설치하기 전에 전원과 본체를 분리한 후 Micro SD 메모리 카드를 넣으세요.
- 역방향으로 무리하게 삽입하지 마세요. Micro SD 메모리 카드가 파손될 수 있습니다.
- 비가 오거나 습도가 높은 날씨에는 Micro SD 카드 탈착을 권장하지 않습니다.
- 제품 외관 커버의 분해는 5분 이내에 완료해주세요. 그렇지 않으면 내부 결로의 원인이 될 수 있습니다.

Micro SD 카드를 넣으려면 (QNO-7010R/7020R/7030R)

1. 프론트 커버를 UNLOCK [ ] 방향으로 돌리세요.

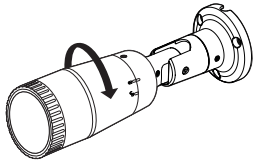

2. 프론트 커버를 당겨 분리하세요.

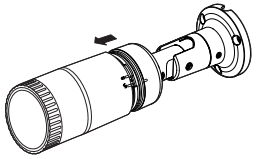

3. 그림과 같이 Micro SD 카드를 화살표 방향으로 밀어 넣으세요.

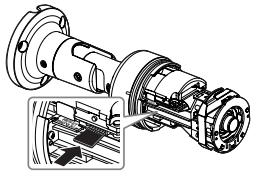

Micro SD 카드를 넣으려면 (QND-7010R/7020R/7030R, QNV-7010R/7020R/7030R)

1. 카메라의 돔 커버를 분리하세요.
2. 그림과 같이 Micro SD 카드를 화살표 방향으로 밀어 넣으세요.

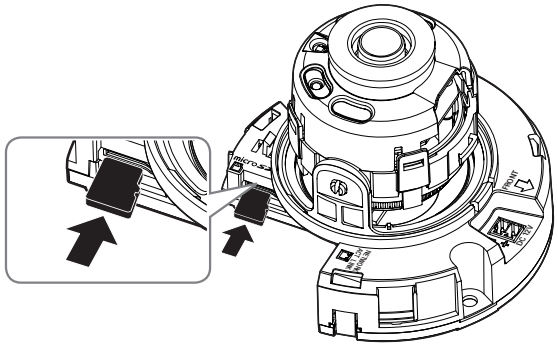

<QND-7010R/7020R/7030R>

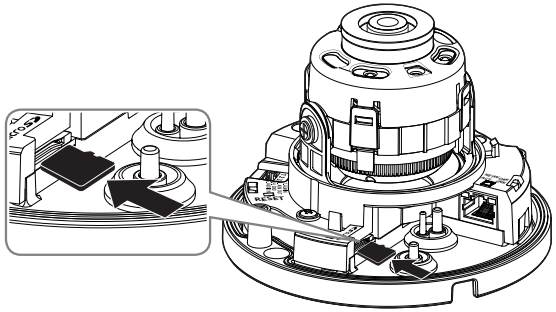

<QNV-7010R/7020R/7030R>

Micro SD 카드를 빼려면

그림과 같이 화살표 방향으로 끼워진 Micro SD 카드의 끝을 살짝 누르면 자동으로 나옵니다.

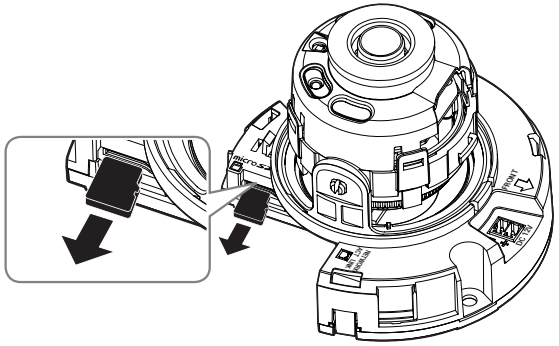

<QND-7010R/7020R/7030R>

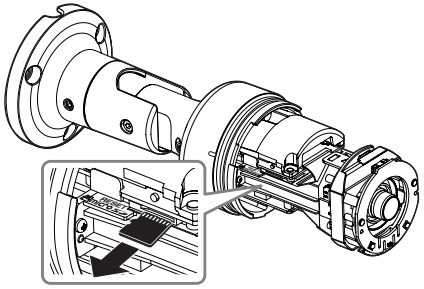

<QNO-7010R/7020R/7030R>

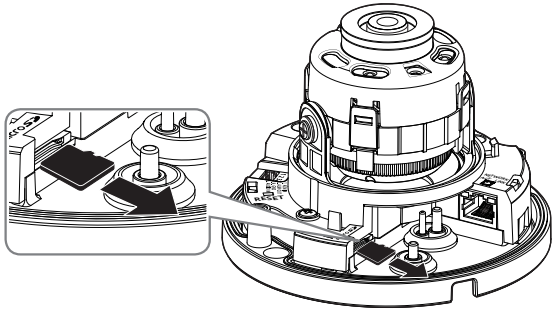

<QNV-7010R/7020R/7030R>

- Micro SD 메모리 카드를 뺄 때 세게 눌렀다가 놓을 경우 Micro SD 메모리 카드가 갑자기 튀어 나올 수 있으므로 주의하세요.
- Micro SD 메모리 카드를 빼기 전 <**저장**>에서 장치를 <**사용 안 함**>으로 설정하고 [**적용**] 버튼을 누른 후 카메라 전원을 끄세요.
- Micro SD 메모리 카드에 데이터를 저장하고 있을 때 Micro SD 메모리 카드를 빼거나, 전원을 끄면 Micro SD 카드에 저장된 데이터가 손상될 수 있습니다.

메모리 카드 정보 (별매품)

메모리 카드란

메모리 카드란 각종 디지털 제품의 데이터(영상, 음성, 문자 등) 기록 및 상호 교환을 위해 개발된 새로운 개념의 외장형 카드입니다.

적합한 메모리 카드 선택하기

본 카메라는 Micro SD/SDHC/SDXC 메모리 카드를 사용할 수 있습니다.
단, 카드 제조사별/종류별 호환성은 차이가 날 수 있습니다.

본 카메라는 다음과 같은 제조사의 메모리 카드 사용을 권장합니다.
Micro SD/SDHC/SDXC 메모리 카드 : Sandisk, Transcend

본 카메라는 4GB ~ 128GB 용량(uhs-1 class)의 메모리 카드 사용을 권장합니다.

재생 시에는 메모리 카드의 읽기/쓰기 성능에 따라 느려질 수 있습니다.
따라서, 읽기/쓰기 속도가 빠른 메모리 카드를 사용하세요.

메모리 카드 각부의 이름

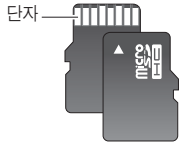

Micro SD/SDHC/SDXC

다른 기기와 연결하기

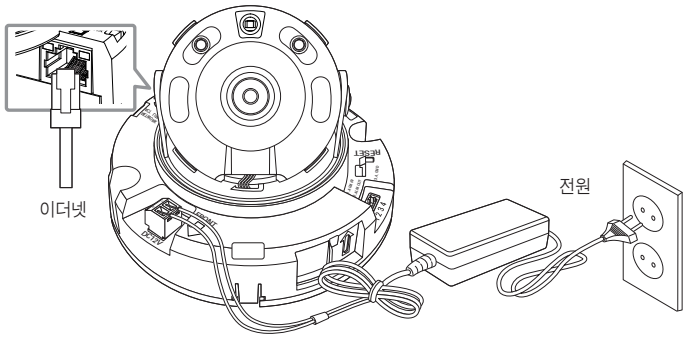

<QND-7010R/7020R/7030R>

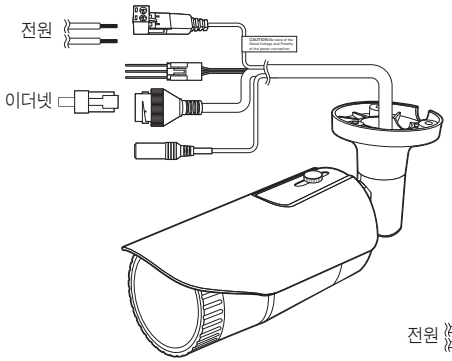

<QNO-7010R/7020R/7030R>

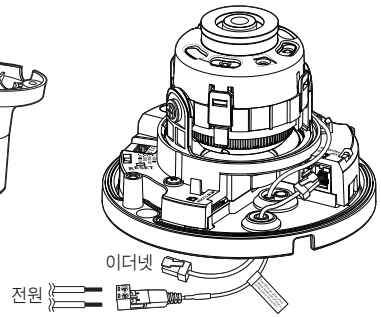

<QNV-7010R/7020R/7030R>

이더넷 연결하기

이더넷 케이블을 연결하여 로컬 네트워크나 인터넷에 연결하세요.

전원 연결하기

전원 어댑터의 +, – 선을 드라이버를 사용하여 카메라의 전원 입력 단자에 연결하세요.

- PoE, DC 12V 전원을 동시 투입시, 기기의 전원은 PoE로 동작합니다.
  - PoE 기능이 가능한 라우터를 사용하여 연결하면, 별도의 전원을 연결하지 않아도 사용 가능합니다.
  - PoE는 IEEE 802.3af 규격이 지원되는 장비를 사용하세요.
  - 기기의 전원은 PoE, DC 12V 중 단일 전원 사용을 권장합니다.
- DC 12V는 극성이 있으므로 주의하여 연결하세요.
- 외부기기 연결시에는 반드시 연결되는 장치의 전원을 끈 상태에서 연결하세요.

모델 별 전원 Wire 규격

DC 12V 입력일 때 :

Wire 종류 (AWG)	#22	#20	#18
케이블 길이 (Max.)	24m	38m	60m

네트워크 케이블 규격

항목	내용	비고
Connector	RJ45	
Ethernet	10/100BASE-T	10/100 Mbps
Cable	UTP Category 5e	
Max Distance	100M	
PoE Support	IEEE 802.3af	

오디오 입력 연결하기

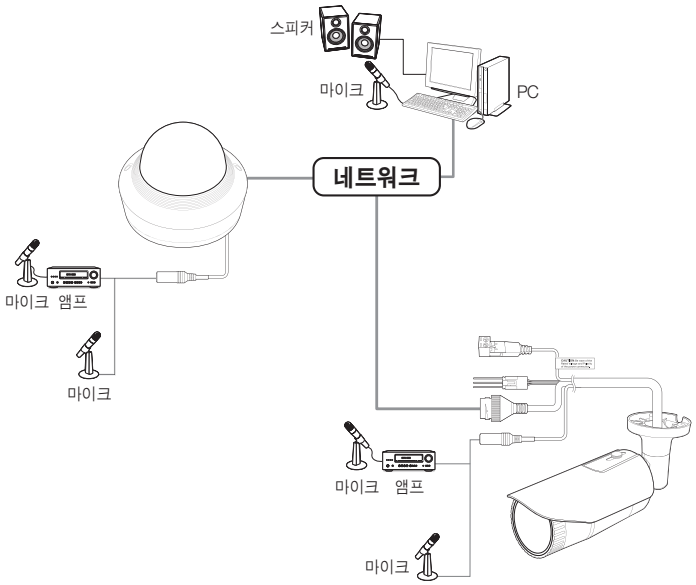

1. 카메라의 AUDIO IN 단자에 마이크가 연결된 앰프의 LINE OUT 단자 또는 마이크를 연결하세요.

■ 별도의 외부 마이크 연결 없이 카메라에 내장된 마이크를 사용할 수 있습니다. (QND-7010R/7020R/7030R에만 해당됩니다.)

2. 오디오 입력 사양을 확인하세요.

- **오디오 코덱**
  - 오디오 입력 : G.711 PCM (Bit Rate: 64kbps / Sampling Frequency: 8kHz), G.726 ADPCM (Bit Rate: 16Kbps, 24Kbps, 32Kbps, 40Kbps / Sampling Frequency: 8kHz)
- **Full duplex 오디오**
- **오디오 입력 (QND-7010R/7020R/7030R)** : 선택가능 (내장 마이크), 지원 전압 : 2.5VDC(4mA) 입력 임피던스 : 2K Ohm
- **오디오 입력 (QNO-7010R/7020R/7030R, QNV-7010R/7020R/7030R)** : 선택가능 (마이크/라인입력), 지원 전압 : 2.5VDC(4mA) 입력 임피던스 : 2K Ohm

알람 입출력 단자 연결하기

입출력 단자를 통해 알람 입출력을 연결하세요.

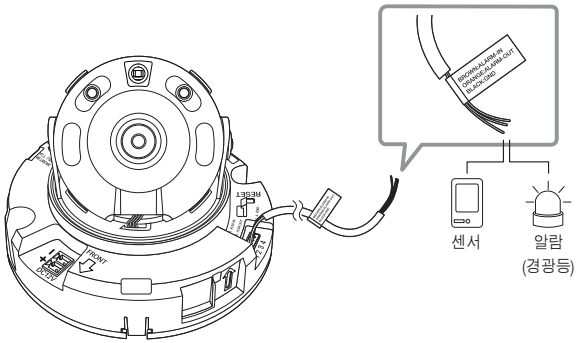

<QND-7010R/7020R/7030R>

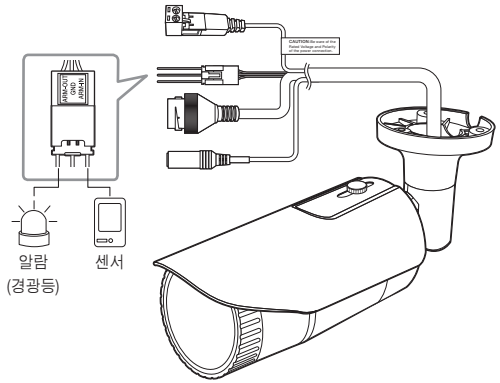

<QNO-7010R/7020R/7030R>

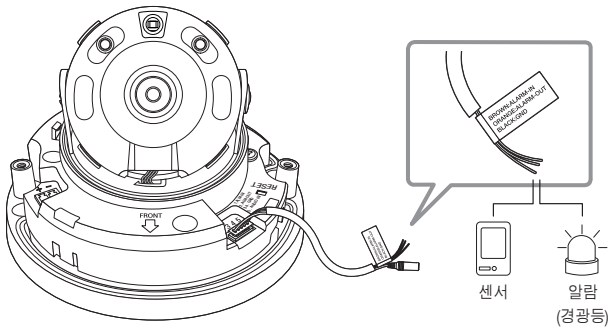

<QNV-7010R/7020R/7030R>

- ALARM-IN : 알람 입력 센서 혹은 외부 주야간 센서를 연결하는 단자입니다.
- ALARM-OUT : 알람 출력신호를 연결하는 단자입니다.
- GND : 알람 입/출력 신호를 연결하는 공통 단자입니다.

! ■ Open Collector 방식으로 전압 및 전류 사양을 초과하는 장치(경광등, 사이렌 등)를 연결할 경우 제품이 고장날 수 있습니다.
전압 및 전류 사양 초과하는 장치를 연결할 경우 "**알람 출력 연결도**"를 참고하세요. (21쪽)

외부 센서와 연결하기

각종 센서의 신호선(2선) 중 한 선은 [**ALARM IN**] 단자에 연결하고, 다른 한 선은 [**GND**] 단자에 연결하세요.

알람 입력 연결도

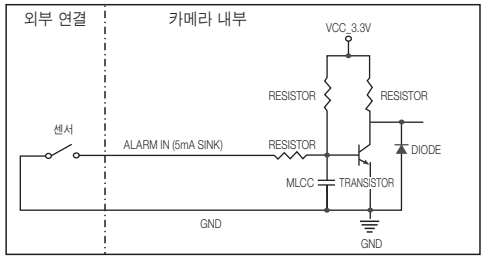

알람 출력 연결하기

Open Collector 방식으로 전압 및 전류 사양을 초과하는 장치(경광등, 사이렌 등)를 연결할 경우 제품이 고장날 수 있습니다.

전압 및 전류 사양 초과하는 장치를 연결할 경우 다음의 알람 출력 연결도를 참고하세요.

알람 출력 연결도

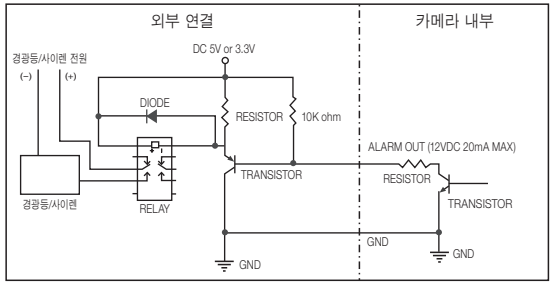

네트워크 연결 및 설정

사용자의 네트워크 연결 구성에 따라 카메라의 네트워크 환경을 설정할 수 있습니다.

LAN 환경에서 직접 카메라 설치하기

LAN 환경에 있는 로컬 PC에서 카메라 접속하기

1. 로컬 PC의 인터넷 브라우저를 실행하세요.
2. 브라우저의 주소창에 접속하려는 카메라의 IP 주소를 입력하세요.

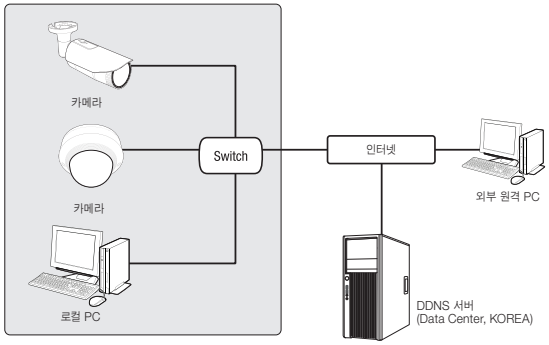

<로컬 네트워크>

- LAN 환경의 외부 인터넷에 있는 원격 PC에서 LAN 환경 안에 설치되어 있는 카메라에 접속할 경우 포트 포워딩이 되어 있지 않거나 방화벽이 설치되어 있으면 접속이 되지 않을 수 있습니다.
  이때는 네트워크 관리자에게 문의하세요.
- 제품 출하 시 IP 주소는 DHCP 서버로부터 자동으로 할당받도록 설정되어 있습니다.
  DHCP 서버가 없는 경우, IP 주소는 192.168.1.100으로 설정됩니다.
  IP 주소를 변경하려면 디바이스 매니저를 이용하세요.
  디바이스 매니저 사용방법은 "**디바이스 매니저 사용하기**"를 참고하세요. (24쪽)

DHCP 방식의 DSL/Cable 모뎀에 직접 카메라 설치하기

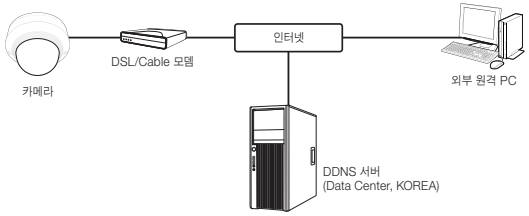

1. 사용자 컴퓨터와 네트워크 카메라를 직접 연결하세요.
2. 디바이스 매니저를 사용하여 해당 카메라의 IP 주소를 사용자 컴퓨터에서 인터넷 브라우저를 통하여 접속할 수 있는 IP 주소로 변경하세요.
3. 인터넷 브라우저를 이용하여 웹뷰어에 접속하세요.
4. [**설정**] 페이지로 이동하세요.
5. [**네트워크**] - [**DDNS**] 설정 페이지로 이동하여, DDNS를 설정하세요.
6. [**Basic**] - [**IP 및 포트**] 설정 페이지로 이동하여, IP 형식을 [**DHCP**]로 설정하세요.
7. 카메라를 사용자 컴퓨터에서 분리하여, 모뎀에 직접 연결하세요.
8. 카메라를 재부팅하세요.

- DDNS 설정 방법은 웹뷰어의 온라인 도움말을 참고하세요.
- IP 형식의 설정 방법은 웹뷰어의 온라인 도움말을 참고하세요.

PPPoE 모뎀에 직접 카메라 설치하기

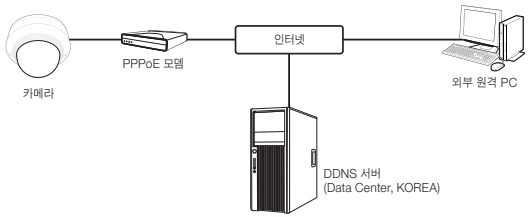

1. 사용자 컴퓨터와 네트워크 카메라를 직접 연결하세요.
2. 디바이스 매니저를 사용하여 해당 카메라의 IP 주소를 사용자 컴퓨터에서 인터넷 브라우저를 통하여 접속할 수 있는 IP 주소로 변경하세요.
3. 인터넷 브라우저를 이용하여 웹뷰어에 접속하세요.
4. [**설정**] 페이지로 이동하세요.
5. [**네트워크**] - [**DDNS**] 설정 페이지로 이동하여, DDNS를 설정하세요.
6. [**Basic**] - [**IP 및 포트**] 설정 페이지로 이동하여, IP 형식을 [**PPPoE**]로 설정한 후 네트워크 서비스의 ID와 암호를 입력하세요.
7. 카메라를 사용자 컴퓨터에서 분리하여, 모뎀에 직접 연결하세요.
8. 카메라를 재부팅하세요.

- DDNS 설정 방법은 웹뷰어의 온라인 도움말을 참고하세요.
- IP 형식의 설정 방법은 웹뷰어의 온라인 도움말을 참고하세요.

PPPoE/Cable 모뎀을 연결한 IP 공유기에 카메라 설치하기

일반 가정집, 소규모 사무실, 상점 등 간단한 네트워크 환경에서 사용 가능한 구성입니다.

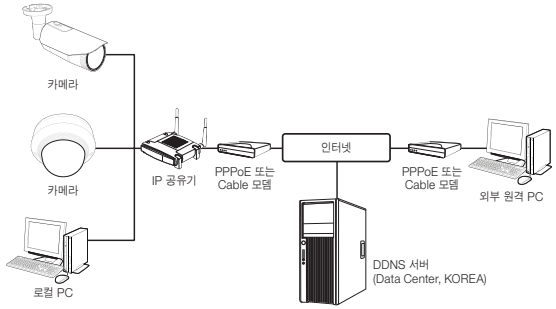

IP 공유기에 연결된 로컬 PC의 네트워크 설정하기

IP 공유기에 설치된 로컬 PC의 네트워크 설정을 다음과 같이 맞춰 주세요.

- 로컬 PC의 <**네트워크**> → <**속성**> → <**로컬 영역 연결**> → <**일반**> → <**속성**> → <**인터넷 프로토콜(TCP/IP) 선택**> → <**속성**> → <**자동으로 IP 주소 받기**> 또는 <**다음 IP 주소 사용**>을 선택하세요.
- <**다음 IP 주소 사용**> 선택 시 다음과 같이 설정하세요.

예1) IP 공유기의 접속주소 (LAN IP)가 192.168.1.1 인 경우
IP 주소 : 192.168.1.100
서브넷 마스크 : 255.255.255.0
기본 게이트웨이 : 192.168.1.1

예2) IP 공유기의 접속주소 (LAN IP)가 192.168.0.1 인 경우
IP 주소 : 192.168.0.100
서브넷 마스크 : 255.255.255.0
기본 게이트웨이 : 192.168.0.1

예3) IP 공유기의 접속주소 (LAN IP)가 192.168.xxx.1 인 경우
IP 주소 : 192.168.xxx.100
서브넷 마스크 : 255.255.255.0
기본 게이트웨이 : 192.168.xxx.1

- IP 공유기의 접속주소는 각 IP 공유기의 사용설명서를 참고하세요.
- IP 공유기의 포트 포워딩 설정 방법은 "**포트 포워딩 (포트 맵핑) 설정하기**"를 참고하세요. (26쪽)

디바이스 매니저 사용하기

- 디바이스 매니저 프로그램은 한화비전 웹 사이트(https://www.HanwhaVision.com)로 접속하여 <**지원**> - <**Online Tool**>에서 다운로드 받을 수 있습니다.
- 디바이스 매니저의 자세한 사용 방법은 메인화면의 <**도움말**> 메뉴에서 확인할 수 있습니다.

자동으로 카메라 검색하기

디바이스 매니저가 설치된 PC와 동일한 네트워크에 카메라가 연결된 경우 검색 기능을 이용해 네트워크 카메라를 찾을 수 있습니다.

1. 디바이스 매니저의 메인화면에서 <**검색**>을 클릭하세요.
2. 검색목록에서 원하는 카메라가 검색되었는지 확인하세요.
   - 카메라에 부착된 스티커에서 MAC 주소를 확인하세요.

IP주소 설정하기

카메라의 네트워크 설정을 변경하려면 <**상태**> 항목에 <**Login OK**>로 표시되어 있어야 합니다. 디바이스 매니저의 메인화면에서 <**인증**>을 클릭하면 로그인 할 수 있습니다.

Static IP 설정하기

IP 주소 및 포트정보를 수동으로 입력하여 설정합니다.

1. 검색목록에서 IP 설정을 변경하려는 카메라를 클릭하세요.
2. 디바이스 매니저의 메인화면에서 <**IP 할당**>을 클릭하세요.
3. <**해당 IP 주소 적용**>을 선택하세요.
   - 카메라의 IP 정보가 기존에 설정되어 있는 값으로 표시됩니다.
4. IP 관련 항목 및 Port 관련 항목을 입력하세요.

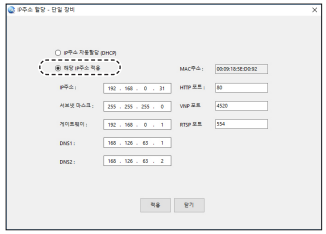

IP 공유기를 사용하지 않는 경우

네트워크 관리자에게 <**IP주소**>, <**서브넷 마스크**>, <**게이트웨이**> 설정값을 문의하세요.

- HTTP Port : 인터넷 브라우저를 사용하여 카메라에 접속할 때 사용되는 HTTP 포트이며, 초기값은 80입니다.
- RTSP Port : 실시간 스트리밍을 제어하는 포트이며, 초기값은 554입니다.

IP 공유기를 사용하는 경우

- IP Address : IP 공유기가 제공하는 사설 IP 범위에 맞게 설정하세요.
  예) 192.168.1.2~254, 192.168.0.2~254,
  192.168.XXX.2~254
- Subnet Mask : IP 공유기의 <**Subnet Mask**>가 카메라의 <**서브넷 마스크**> 값이 됩니다.
- Gateway : IP 공유기의 <**Local IP Address**>가 카메라의 <**게이트웨이**> 값이 됩니다.

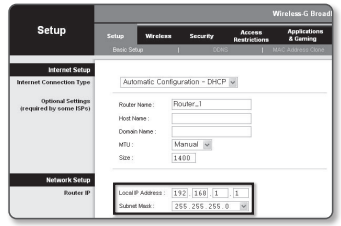

- 연결된 IP 공유기 모델에 따라 설정 방법이 다를 수 있습니다. 해당 공유기의 사용설명서를 참고하세요.
- IP 공유기의 포트 포워딩 설정 방법은 "**포트 포워딩 (포트 맵핑) 설정하기**"를 참고하세요. (26쪽)

IP 공유기에 카메라가 2대 이상 연결되어 있는 경우

카메라의 IP 관련 항목, Port 관련 항목을 각각 다르게 설정해 주세요.

예)

구분		1번 카메라	2번 카메라
IP 관련 항목	IP 주소 서브넷 마스크 게이트웨이	192.168.1.100 255.255.255.0 192.168.1.1	192.168.1.101 255.255.255.0 192.168.1.1
Port 관련 항목	HTTP 포트 RTSP 포트	8080 554	8081 555

- <**HTTP 포트**>가 80 이외의 번호로 설정되어 있는 경우 인터넷 브라우저의 주소 입력란에 <**Port**> 번호도 함께 입력을 해야 카메라에 접속이 가능합니다.
  예) http://IP주소 : HTTP Port
  http://192.168.1.100:8080

5. [**적용**] 버튼을 클릭하세요.
6. 성공 확인 메세지가 표시되면 [**확인**] 버튼을 클릭하세요.

Dynamic IP 설정하기

IP 주소를 DHCP를 통해 자동으로 할당받습니다

- Dynamic IP 사용 환경 예
  - IP 공유기에 카메라를 설치한 경우, DHCP를 이용하여 IP를 할당 받는 경우
  - DHCP 방식을 사용하는 모뎀에 카메라를 직접 설치한 경우
  - LAN 환경에서 내부 DHCP 서버로부터 IP를 할당 받는 경우

1. 검색목록에서 IP 설정을 변경하려는 카메라를 클릭하세요.
2. 디바이스 매니저의 메인화면에서 <**IP 할당**>을 클릭하세요.
3. <**IP주소 자동할당 (DHCP)**>를 선택하세요.
4. [**적용**] 버튼을 클릭하세요.
5. 성공 확인 메세지가 표시되면 [**확인**] 버튼을 클릭하세요.

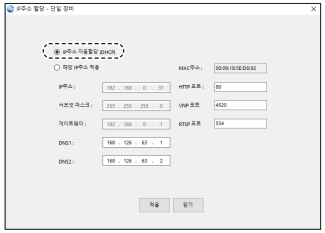

수동으로 카메라 등록하기

검색 기능으로 카메라를 찾지 못하거나, 외부 네트워크에 카메라가 연결된 경우 IP 정보를 수동으로 입력하여 원격으로 카메라를 찾아 등록할 수 있습니다.

1. 디바이스 매니저의 메인화면에서 <**장비 추가**> - <**장비 수동 등록**>을 클릭하세요.
2. 검색할 IP 주소의 범위를 입력하세요.
3. 등록할 카메라의 <**모델 이름**>을 선택하고 HTTP 포트, 아이디, 비밀번호를 입력하세요.
4. [**등록**] 버튼을 클릭하세요.
5. 목록에서 원하는 카메라가 등록되었는지 확인하세요.
   - 카메라에 부착된 스티커에서 MAC 주소를 확인하세요.

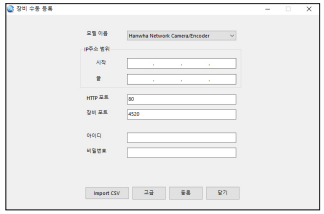

자동으로 IP 설정하기

1. 검색목록에서 IP를 자동으로 설정하려는 카메라를 클릭하세요.
2. 디바이스 매니저의 메인화면에서 < **+** >를 클릭하세요.
   - 장비 설정 메뉴가 나타납니다.
3. 장비 설정 메뉴에서 <**IP 자동 설정**>을 클릭하세요.
4. [**닫기**] 버튼을 클릭하세요.

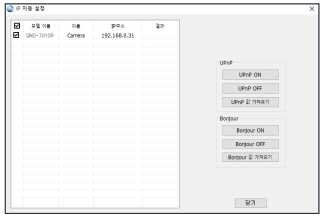

포트 포워딩 (포트 맵핑) 설정하기

IP 공유기에 카메라가 설치된 경우, IP 공유기 외부 원격 PC에서 IP 공유기 내부의 카메라에 접속하기 위해서는 IP 공유기에 포트 포워딩을 설정해 주어야 합니다.

수동으로 포트 포워딩 설정하기

1. IP 공유기의 설정 메뉴에서 <**Applications & Gaming**> - <**Port Range Forward**>를 클릭하세요.
   타사 IP 공유기의 포트 포워딩 메뉴 위치 및 설정 방법은 각 IP 공유기의 사용설명서를 참고하세요.
2. IP 공유기에 연결되어 있는 각 카메라에 대해 <**TCP**>와 <**UDP Port**>를 선택하세요.
   IP 공유기에 설정할 각 포트 번호는 카메라 웹뷰어의 <**설정**> - <**Basic**> - <**IP 및 포트**>에서 지정한 포트 번호에 맞게 설정해야 합니다.
3. 설정이 완료되면 [**Save Settings**] 버튼을 클릭하세요.
   설정이 저장됩니다.

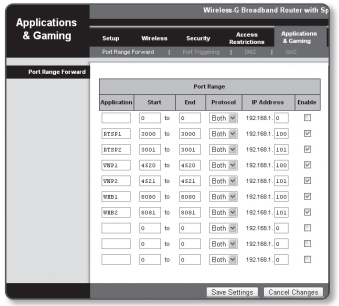

- 포트 포워딩 설정하기 설명은 CISCO IP 공유기로 설정한 예시입니다.
- 연결된 IP 공유기 모델에 따라 설정 방법이 다를 수 있습니다.
  해당 공유기의 사용설명서를 참고하세요.

여러대의 카메라를 포트 포워딩 설정하기

- 공유기의 포트 포워딩 설정은 공유기의 설정 페이지를 통해서 변경할 수 있습니다.
- 각 포트는 사용자가 카메라의 설정 페이지에서 변경할 수 있습니다.

예) 공유기에 카메라1과 카메라2가 연결되어 있는 경우 :

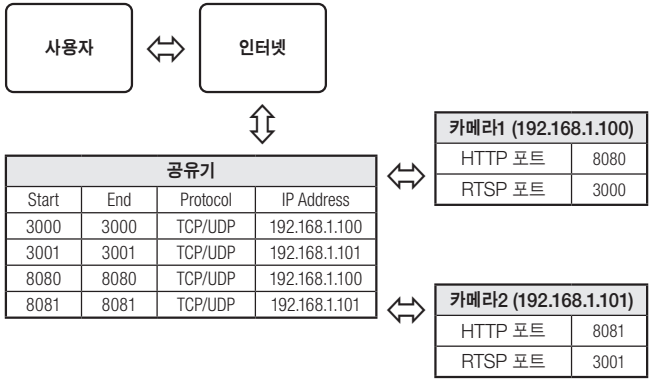

- UPnP(Universal Plug and Play) 기능을 지원하는 공유기를 사용하면 공유기 설정 없이 포트 포워딩을 할 수 있습니다.
  네트워크 카메라 접속 후 "**설정 → 네트워크 → DDNS**" 메뉴에서 <**DDNS**>의 <**퀵 커넥트**>의 체크박스를 선택하세요.

공유된 로컬 PC에서 카메라 접속하기

1. 디바이스 매니저를 실행하세요.
   연결된 카메라를 검색하여 리스트에 표시합니다.
2. 연결할 카메라를 더블 클릭하세요.
   인터넷 브라우저가 시작되면서 카메라에 접속합니다.

- 사용자가 직접 인터넷 브라우저를 실행시켜, 주소 창에 검색된 카메라의 IP 주소를 입력하여 접속할 수도 있습니다.

외부의 원격 PC에서 인터넷으로 카메라에 접속하기

IP 공유기 외부의 원격 PC에서 사용자는 카메라의 DDNS URL을 이용하여 IP 공유기 내부의 카메라에 접속할 수 있습니다.

1. IP 공유기 내부에 설치되어 있는 카메라를 외부에서 접속하기 위해서는 반드시 IP 공유기에 포트 포워딩 설정을 하세요.
2. 외부 원격 PC에서 인터넷 브라우저를 실행하여 주소창에 카메라에 접속하기 위한 DDNS URL 주소, 또는 IP 공유기의 인터넷 IP 주소를 입력하세요.
   예) http://ddns.hanwha-security.com/ID

- DDNS를 사용하려면 DDNS 홈페이지(http://ddns.hanwha-security.com)에서 회원가입을 한 후, [**My DDNS**]> [**제품등록**]에서 제품을 먼저 등록해야 합니다.

카메라에 접속하기

일반적인 방법인 경우

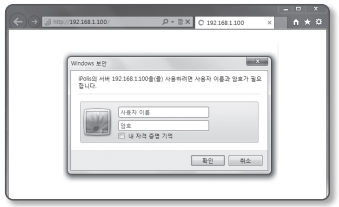

1. 인터넷 브라우저를 실행하세요.
2. 주소 입력란에 카메라의 IP주소를 입력 하세요.
   예) • IP주소 (IPv4) : 192.168.1.100인 경우 ➜ http://192.168.1.100
   - 로그인 창이 나타납니다.
   • IP주소 (IPv6) : 2001:230:abcd:ffff:0000:0000:ffff:1111인 경우
   ➜ http://[2001:230:abcd:ffff:0000:0000:ffff:1111]
   - 로그인 창이 나타납니다.

HTTP Port가 80이 아닌 경우

1. 인터넷 브라우저를 실행하세요.
2. 주소 입력란에 카메라의 IP주소와 HTTP 포트번호를 입력하세요.
   예) IP 주소 : 192.168.1.100:HTTP 포트번호(8080)인 경우
   ➜ http://192.168.1.100:8080 - 로그인 창이 나타납니다.

URL로 접속하기

1. 인터넷 브라우저를 실행하세요.
2. 주소 입력란에 카메라의 DDNS URL을 입력하세요.
   예) URL 주소 : http://ddns.hanwha-security.com/ID
   - 로그인 창이 나타납니다.

- Local 망으로만 구성된 환경에서는 접속할 수 없습니다.

UPnP를 이용하여 접속하기

1. UPnP 프로토콜을 지원하는 클라이언트나 운영체제를 실행하세요.
2. 검색되는 카메라의 이름을 클릭하세요.
   Windows 운영체제 컴퓨터에서는 네트워크 메뉴에 검색되는 카메라 이름을 클릭하세요.
   - 로그인 창이 나타납니다.

Bonjour를 이용하여 접속하기

1. Bonjour 프로토콜을 지원하는 클라이언트나 운영체제를 실행하세요.
2. 검색되는 카메라의 이름을 클릭하세요.
   Mac 운영체제 컴퓨터에서는 Safari의 Bonjour 탭에 검색되는 카메라의 이름을 클릭하세요.
   - 로그인 창이 나타납니다

DDNS 주소를 확인하려면

카메라가 DHCP 방식의 케이블 모뎀이나 DSL 모뎀 혹은 PPPoE 모뎀에 직접 연결되어 있는 경우, ISP(사용자가 가입한 통신회사 서버)에 연결을 시도할 때마다 IP 주소가 변경됩니다.
이 경우 사용자는 변경된 IP 주소를 알수 없습니다.

유동 IP를 사용하는 제품을 DDNS 서버에 등록해 놓으면 제품에 접속하고자 할 때 변경된 IP 주소를 쉽게 알 수 있습니다.
IP 주소를 <**DDNS**> 서버에 등록하기 위해서는 먼저 http://ddns.hanwha-security.com 페이지에서 제품을 등록한 후 카메라 웹뷰어의 <**네트워크**> - <**DDNS**> 항목을 <**DDNS**>로 설정하고, <**제품 ID**>에 DDNS 서버에서 등록한 제품 아이디를 입력하세요.

비밀번호 설정하기

최초 제품 접속 시 반드시 로그인 비밀번호를 등록해야합니다.

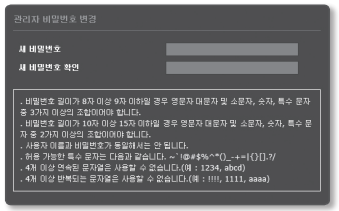

- 새로운 비밀번호는 8자 이상 9자리 이하는 영어 대/소문자, 숫자 특수 문자 중 3종류 이상을 사용해야 하며, 10자 이상 15자리 이하는 2종류 이상을 사용해야 합니다.
  - 사용 가능한 특수문자 : ~`!@#$%^*()_-+=|{}[].?/
- 보안강화를 위하여 동일한 문자 반복 사용이나 연속된 키보드 배열을 비밀번호로 사용하지 않는 것을 권장합니다.
- 비밀번호 분실 시 카메라에 있는 [**RESET**] 버튼을 눌러 제품 초기화를 해야 하므로 반드시 메모 또는 기억하시길 바랍니다.

로그인하기

카메라에 접속할때마다 로그인 창이 뜹니다.
설정된 사용자 이름과 암호를 입력해야 카메라에 접속할 수 있습니다.

1. <**사용자 이름**> 입력란에 "**admin**"을 입력하세요.
   관리자의 아이디 "**admin**"은 고정이며 변경할 수 없습니다.
2. <**암호**> 입력란에 설정한 암호를 입력하세요.
3. [**확인**] 버튼을 클릭하세요.
   로그인이 완료되면 카메라 라이브 뷰어 화면이 나타납니다.

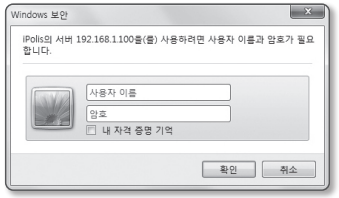

- 카메라 웹뷰어 접속시 영상정보가 암호화 되어있지 않으니 보안에 각별히 주의하시길 바랍니다.

- 사용자 이름과 암호를 입력한 후 "**내 자격 증명 기억**"에 체크표시를 할 경우 다음 접속 시 사용자 이름과 암호가 자동으로 설정됩니다.
- 화면비율이 100% 일 때 가장 좋은 화면을 볼 수 있습니다. 화면비율을 줄일 경우 화면이 잘려져서 보일 수 있습니다.

카메라 웹뷰어 설정하기

1. [**설정 (⚙)**] 아이콘을 클릭하세요.
2. 설정 화면이 나타납니다.
3. 네트워크 상에서 카메라의 기본 정보, 비디오 및 오디오, 네트워크, 이벤트, 분석, 시스템 설정을 실행할 수 있습니다.
4. <**도움말 (?)**>을 클릭하면 각 기능에 대한 상세한 설명을 확인할 수 있습니다.

문제 해결하기

문제	해결
Safari에서 https로 플러그인 프리 웹뷰어 접속 시 영상이 나오지 않아요.	• https 처음 접속 시 발생하는 웹사이트 신원 팝업에서 "인증서 보기" 클릭 후 "웹뷰어 설정 IP에 연결할 때 항상 신뢰" 항목의 체크박스를 선택하세요. • 만일 아래 메시지에서 "계속" 선택 후 로그인하여 영상이 나오지 않는 경우, command+Q 를 눌러 Safari 브라우저 종료 후 재접속하여 위의 절차를 따르세요.
브라우저로 카메라에 접속되지 않아요.	• 카메라의 네트워크 설정값들이 올바르게 되어 있는지 확인하세요. • 네트워크 케이블은 연결이 올바르게 되어 있는지 확인하세요. • DHCP로 연결하는 경우 카메라가 정상적으로 유동 IP를 획득했는지 확인하세요. • 카메라가 공유기에 설치되어 있는 경우, 포트 포워딩 설정이 올바르게 되어 있는지 확인하세요.
영상을 모니터링 하고 있던 웹뷰어의 접속이 끊어졌어요.	• 다른 접속자가 카메라 설정값을 변경하거나, 네트워크 설정을 바꾸거나 하게 되면 접속되어 있던 웹뷰어는 접속이 끊어집니다. • 네트워크 연결이 잘 되어있는지 확인하세요. • 카메라가 PPPoE 네트워크에 연결된 경우, 네트워크 상황이 나빠지면 웹뷰어의 접속이 끊어질 수 있습니다.
신규로 웹뷰어에 접속하거나 Client에 streaming을 접속시켰는데 영상이 나오지 않아요.	• 최대 사용 가능한 프로파일의 수는 3개입니다. 4개 이상의 프로파일 사용시 접속이 끊길 수 있습니다. 예) MJPEG. H.264, H.265 접속 후 다른 프로파일로 접속시 접속 끊김
디바이스 매니저 프로그램에서 네트워크에 연결된 카메라가 검색되지 않아요.	• PC의 방화벽 설정을 해제하신 후 다시 검색하시기 바랍니다.
영상이 겹쳐져 보여요.	• 두 대 이상의 카메라가 동일한 멀티캐스트 주소를 사용하지 않고 서로 다른 주소로 설정되어 있는지 확인하시기 바랍니다. 동일한 주소를 사용하면 영상이 겹쳐서 보일 수 있습니다.
영상이 보이지 않아요.	• 영상 전송방식이 멀티캐스트로 설정되어 있는 경우, 카메라가 접속한 로컬망에 멀티캐스트를 지원하는 라우터가 존재하는지 확인하세요.

문제	해결
오디오 입력 설정이 되어 있는데 음성 녹음이 되지 않아요.	• <Basic>-<비디오 프로파일>에서 <오디오 입력>을 사용한다고 체크해야 합니다.
<이벤트>에서 <움직임 감지>를 <사용>으로 설정한 후, 카메라에서 움직임 감지 이벤트가 발생해도 이메일로 파일이 전달되지 않아요.	• 다음과 같은 순서로 설정값을 확인하세요. 가. <날짜 및 시간> 설정을 확인하세요. 나. <움직임 감지>를 <사용>으로 설정해야 합니다. 다. <이벤트 설정>에서 <이메일>을 사용한다고 체크해야 합니다.
Micro SD 메모리카드에 녹화가 되지 않아요.	• 메모리 카드가 불량인지 확인하세요.
Micro SD 메모리카드를 삽입하였으나 메모리 카드를 인식하지 못해요.	• 메모리 카드가 올바른 방향으로 정확히 삽입되어 있는지 확인하세요. 다른 기기에서 포맷한 메모리 카드는 본 카메라에서의 사용을 보증할 수 없습니다. • <설정> → <이벤트> → <저장>에서 메모리카드를 다시 포맷하세요.
NAS에 녹화되지 않아요.	• NAS에 등록한 정보가 올바른지 확인하세요.
NAS 설정이 실패라고 뜹니다.	• NAS IP주소가 유효한지 확인하세요. • NAS의 ID/비밀번호가 유효한지 확인하세요. • NAS의 ID에서 기본 폴더로 설정한 폴더에 접속할 수 있는지 확인하세요. • NAS에서 SMB/CIFS항목의 체크가 해제되었는지 확인하세요. • NAS IP 주소와 카메라 IP주소의 형식이 동일한지 확인하세요. 예) NAS 및 카메라 서브넷마스크 초기값은 255.255.255.0 입니다. IP 주소가 192.168.20.32라면 NAS IP 주소는 192.168.20.1~192.168.20.255사이여야 합니다. • 이미 저장 중이거나 사용했던 기본 폴더를 포맷하지 않고 다른 사용자로 접속하려고 하는지 확인하세요. • 권장하는 NAS 장비인지 확인하세요.

Open Source Announcement

GPL/LGPL software license

The software included in this product contains copyrighted software that is licensed under the GPL/LGPL. You may obtain the complete Corresponding Source code from us for a period of three years after our last shipment of this product by sending email to help.cctv@hanwha.com

If you want to obtain the complete Corresponding Source code in the physical medium such as CD-ROM, the cost of physically performing source distribution might be charged.

GPL SW

Component Name	License	URL
Base Kernel	GPL 2.0	
Busybox	GPL 2.0	http://www.busybox.net/downloads/snapshots
iproute2-4.3.0	GPL 2.0	
iptables-1.4.21	GPL 2.0	http://ftp.netfilter.org/pub/iptables
ethtool-4.2	GPL 2.0	
mtd-1.5.2	GPL 2.0	ftp://ftp.infradead.org/pub/mtd-utils
mii-diag-2.11	GPL 2.0	
rp-pppoe-3.11	GPL 2.0	http://www.roaringpenguin.com/pppoe/
wpa_supplicant-2.5	GPL 2.0	
bash-4.3.30	GPL 3.0	
zeroconf	GPL 2.0	

LGPL SW

Component Name	License	URL
gLibc	LGPL 2.0	
Inetutils	LGPL 3.0	
neon-0.29.6	LGPL 2.0	http://www.webdav.org/neon/

GNU GENERAL PUBLIC LICENSE

Version 2, June 1991

Copyright (C)1989, 1991 Free Software Foundation, Inc. 51 Franklin Street,Fifth Floor, Boston, MA 02110-1301, USA

Everyone is permitted to copy and distribute verbatim copies of this license document, but changing it is not allowed.

Preamble

The licenses for most software are designed to take away your freedom to share and change it. By contrast, the GNU General Public License is intended to guarantee your freedom to share and change free software-- to make sure the software is free for all its users. This General Public License applies to most of the Free Software Foundation's software and to any other program whose authors commit to using it. (Some other Free Software Foundation software is covered by the GNU Lesser General Public License instead.) You can apply it to your programs, too. When we speak of free software, we are referring to freedom, not price. Our General Public Licenses are designed to make sure that you have the freedom to distribute copies of free software (and charge for this service if you wish), that you receive source code or can get it if you want it, that you can change the software or use pieces of it in new free programs ; and that you know you can do these things.

To protect your rights, we need to make restrictions that forbid anyone to deny you these rights or to ask you to surrender the rights. These restrictions translate to certain responsibilities for you if you distribute copies of the software, or if you modify it.

For example, if you distribute copies of such a program, whether gratis or for a fee, you must give the recipients all the rights that you have.

You must make sure that they, too, receive or can get the source code. And you must show them these terms so they know their rights. We protect your rights with two steps :

(1)copyright the software, and (2)offer you this license which gives you legal permission to copy, distribute and/or modify the software. Also, for each author's protection and ours, we want to make certain that everyone understands that there is no warranty for this free software. If the software is modified by someone else and passed on, we want its recipients to know that what they have is not the original, so that any problems introduced by others will not reflect on the original authors' reputations.

Finally, any free program is threatened constantly by software patents. We wish to avoid the danger that redistributors of a free program will individually obtain patent licenses, in effect making the program proprietary. To prevent this, we have made it clear that any patent must be licensed for everyone's free use or not licensed at all. The precise terms and conditions for copying, distribution and modification follow.

TERMS AND CONDITIONS FOR COPYING, DISTRIBUTION AND MODIFICATION

Version 2, June 1991 Copyright (C) 1989, 1991 Free Software Foundation, Inc. 51 Franklin S

0. This License applies to any program or other work which contains a notice placed by the copyright holder saying it may be distributed under the terms of this General Public License.

The "Program", below, refers to any such program or work, and a "work based on the Program" means either the Program or any derivative work under copyright law : that is to say, a work containing the Program or a portion of it, either verbatim or with modifications and/or translated into another language. (Hereinafter, translation is included without limitation in the term "modification".) Each licensee is addressed as "you".
Activities other than copying, distribution and modification are not covered by this License ; they are outside its scope. The act of running the Program is not restricted, and the output from the Program is covered only if its contents constitute a work based on the Program (independent of having been made by running the Program). Whether that is true depends on what the Program does.

1. You may copy and distribute verbatim copies of the Program's source code as you receive it, in any medium, provided that you conspicuously and appropriately publish on each copy an appropriate copyright notice and disclaimer of warranty; keep intact all the notices that refer to this License and to the absence of any warranty ; and give any other recipients of the Program a copy of this License along with the Program.
You may charge a fee for the physical act of transferring a copy, and you may at your option offer warranty protection in exchange for a fee.

2. You may modify your copy or copies of the Program or any portion of it, thus forming a work based on the Program, and copy and distribute such modifications or work under the terms of Section 1 above, provided that you also meet all of these conditions :

a) You must cause the modified files to carry prominent notices stating that you changed the files and the date of any change.

b) You must cause any work that you distribute or publish, that in whole or in part contains or is derived from the Program or any part thereof, to be licensed as a whole at no charge to all third parties under the terms of this License.

c) If the modified program normally reads commands interactively when run,you must cause it, when started running for such interactive use in the most ordinary way, to print or display an announcement including an appropriate copyright notice and a notice that there is no warranty (or else, saying that you provide a warranty) and that users may redistribute the program under these conditions, and telling the user how to view a copy of this License. (Exception:if the Program itself is interactive but does not normally print such an announcement, your work based on the Program is not required to print an announcement.)

These requirements apply to the modified work as a whole. If identifiable sections of that work are not derived from the Program, and can be reasonably considered independent and separate works in themselves, then this License, and its terms, do not apply to those sections when you distribute them as separate works. But when you distribute the same sections as part of a whole which is a work based on the Program, the distribution of the whole must be on the terms of this License, whose permissions for other licensees extend to the entire whole, and thus to each and every part regardless of who wrote it.

Thus, it is not the intent of this section to claim rights or contest your rights to work written entirely by you ; rather, the intent is to exercise the right to control the distribution of derivative or collective works based on the Program. In addition, mere aggregation of another work not based on the Program with the Program (or with a work based on the Program)on a volume of a storage or distribution medium does not bring the other work under the scope of this License.

3. You may copy and distribute the Program (or a work based on it, under Section 2)in object code or executable form under the terms of Sections 1 and 2 above provided that you also do one of the following :

a) Accompany it with the complete corresponding machine-readable source code, which must be distributed under the terms of Sections 1 and 2 above on a medium customarily used for software interchange ; or,

b) Accompany it with a written offer, valid for at least three years, to give any third party, for a charge no more than your cost of physically performing source distribution, a complete machinereadable copy of the corresponding source code, to be distributed under the terms of Sections 1 and 2 above on a medium customarily used for software interchange ; or,

c) Accompany it with the information you received as to the offer to distribute corresponding source code. (This alternative is allowed only for noncommercial distribution and only if you received the program in object code or executable form with such an offer, in accord with Subsection b above.) The source code for a work means the preferred form of the work for making modifications to it. For an executable work, complete source code means all the source code for all modules it contains, plus any associated interface definition files, plus the scripts used to control compilation and installation of the executable. However, as a special exception, the source code distributed need not include anything that is normally distributed (in either source or binary form) with the major

components (compiler, kernel, and so on) of the operating system on which the executable runs, unless that component itself accompanies the executable. If distribution of executable or object code is made by offering access to copy from a designated place, then offering equivalent access to copy the source code from the same place counts as distribution of the source code, even though third parties are not compelled to copy the source along with the object code.

4. You may not copy, modify, sublicense, or distribute the Program except as expressly provided under this License. Any attempt otherwise to copy, modify, sublicense or distribute the Program is void, and will automatically terminate your rights under this License.

However, parties who have received copies, or rights, from you under this License will not have their licenses terminatedso long as such parties remain in full compliance.

5. You are not required to accept this License, since you have not signed it. However, nothing else grants you permission to modify or distribute the Program or its derivative works.

These actions are prohibited by law if you do not accept this License.Therefore, by modifying or distributing the Program (or any work based on the Program), you indicate your acceptance of this License to do so, and all its terms and conditions for copying, distributing or modifying the Program or works based on it.

6. Each time you redistribute the Program (or any work based on the Program), the recipient automatically receives a license from the original licensor to copy, distribute or modify the Program subject to these terms and conditions. You may not impose any further restrictions on the recipients' exercise of the rights granted herein. You are not responsible for enforcing compliance by third parties to this License.

7. If, as a consequence of a court judgment or allegation of patent infringement or for any other reason (not limited to patent issues), conditions are imposed on you (whether by court order, agreement or otherwise)that contradict the conditions of this License, they do not excuse you from the conditions of this License. If you cannot distribute so as to satisfy simultaneously your obligations under this License and any other pertinent obligations, then as a consequence you may not distribute the Program at all.

For example, if a patent license would not permit royaltyfree redistribution of the Program by all those who receive copies directly or indirectly through you, then the only way you could satisfy both it and this License would be to refrain entirely from distribution of the Program.

If any portion of this section is held invalid or unenforceable under any particular circumstance, the balance of the section is intended to apply and the section as a whole is intended to apply in other circumstances. It is not the purpose of this section to induce you to infringe any patents or other property right claims or to contest validity of any such claims; this section has the sole purpose of protecting the integrity of the free software distribution system, which is implemented by public license practices. Many people have made generous contributions to the wide range of software distributed through that system in reliance on consistent application of that system ; it is up to the author/donor to decide if he or she is willing to distribute software through any other system and a licensee cannot impose that choice. This section is intended to make thoroughly clear what is believed to be a consequence of the rest of this License.

8. If the distribution and/or use of the Program is restricted in certain countries either by patents or by copyrighted interfaces, the original copyright holder who places the Program under this License may add an explicit geographical distribution limitation excluding those countries,so that distribution is permitted only in or among countries not thus excluded. In such case, this License incorporates the limitation as if written in the body of this License.

9. The Free Software Foundation may publish revised and/or new versions of the General Public License from time to time. Such new versions will be similar in spirit to the present version, but may differ in detail to address new problems or concerns. Each version is given a distinguishing version number. If the Program specifies a version number of this License which applies to it and "any later version", you have the option of following the terms and conditions either of that version or of any later version published by the Free Software Foundation. If the Program does not specify a version number of this License, you may choose any version ever published by the Free Software Foundation.

10. If you wish to incorporate parts of the Program into other free programs whose distribution conditions are different, write to the author to ask for permission. For software which is copyrighted by the Free Software Foundation,write to the Free Software Foundation ; we sometimes make exceptions for this. Our decision will be guided by the two goals of preserving the free status of all derivatives of our free software and of promoting the sharing and reuse of software generally.

NO WARRANTY

11. BECAUSE THE PROGRAM IS LICENSED FREE OF CHARGE, THERE IS NO WARRANTY FOR THE PROGRAM, TO THE EXTENT PERMITTED BY APPLICABLE LAW. EXCEPT WHEN OTHERWISE STATED IN WRITING THE COPYRIGHT HOLDERS AND/OR OTHER PARTIES PROVIDE THE PROGRAM "ASIS" WITHOUT WARRANTY OF ANY KIND, EITHER EXPRESSED OR IMPLIED, INCLUDING, BUT NOT LIMITED TO, THE IMPLIED WARRANTIES OF MERCHANTABILITY AND FITNESS FOR A PARTICULAR PURPOSE. THE ENTIRE RISK AS TO THE QUALITY AND PERFORMANCE OF THE PROGRAM IS WITH YOU. SHOULD THE PROGRAMPROVE DEFECTIVE, YOU ASSUME THE COST OF ALL NECESSARY SERVICING, REPAIR OR CORRECTION.

12. IN NO EVENT UNLESS REQUIRED BY APPLICABLE LAW OR AGREED TO IN WRITING WILL ANY COPYRIGHT HOLDER, OR ANY OTHER PARTY WHO MAY MODIFY AND/OR REDISTRIBUTE DAMAGES, INCLUDING ANY GENERAL, SPECIAL, INCIDENTAL OR CONSEQUENTIAL DAMAGES ARISING OUT OF THE USE OR INABILITY TO USE THE PROGRAM (INCLUDING BUT NOT LIMITED TO LOSS OF DATA OR DATA BEING RENDERED INACCURATE OR LOSSES SUSTAINED BY YOU OR THIRD PARTIES OR A FAILURE OF THE PROGRAM TO OPERATE WITH ANY OTHER PROGRAMS), EVEN IF SUCH HOLDER OR OTHER PARTY HAS BEEN ADVISED OF THE POSSIBILITY OF SUCH DAMAGES.

END OF TERMS AND CONDITIONS

How to Apply These Terms to Your New Programs If you develop a new program, and you want it to be of the greatest possible use to the public, the best way to achieve this is to make it free software which everyone can redistribute and change under these terms. To do so, attach the following notices to the program. It is safest to attach them to the start of each source file to most effectively convey the exclusion of warranty ; and each file should have at least the "copyright" line and a pointer to where the full notice is found.one line to give the program's name and an idea of what it does.

Copyright (C)yyyy name of author

This program is free software ; you can redistribute it and/or modify it under the terms of the GNU General Public License as published by the Free Software Foundation ; either version 2 of the License, or (at your option)any later version.

This program is distributed in the hope that it will be useful, but WITHOUT ANY WARRANTY ; without even the implied warranty of MERCHANTABILITY or FITNESS FOR A PARTICULAR PURPOSE. See the GNU General Public License for more details.

You should have received a copy of the GNU General Public License along with this program ; if not, write to the Free Software Foundation, Inc.,51 Franklin Street, Fifth Floor, Boston, MA 02110-1301, USA.
Also add information on how to contact you by electronic and paper mail. If the program is interactive, make it output a short notice like this when it starts in an interactive mode :

Gnomovision version 69, Copyright (C) year name of author Gnomovision comes with ABSOLUTELY NO WARRANTY ; for details type 'show w'. This is free software, and you are welcome to redistribute it under certain conditions ; type 'show c' for details.

The hypothetical commands 'show w' and 'show c' should show the appropriate parts of the General Public License. Of course, the commands you use may be called something other than 'show w' and 'show c' ; they could even be mouse-clicks or menu items-- whatever suits your program.

You should also get your employer (if you work as a programmer)or your school, if any, to sign a "copyright disclaimer" for the program,if necessary. Here is a sample ; alter the names:

Yoyodyne, Inc.,hereby disclaims all copyright interest in the program 'Gnomovision' (which makes passes at compilers) written by James Hacker. signature of Ty Coon, 1 April 1989 Ty Coon, President of Vice This General Public License does not permit incorporating your program into proprietary programs. If your program is a subroutine library, you may consider it more useful to permit linking proprietary applications with the library. If this is Lwihcaetn ysoeu want to do, use the GNU Lesser General Public instead of this License.

GNU GENERAL PUBLIC LICENSE

Version 3, 29 June 2007

Copyright (C) 2007 Free Software Foundation, Inc. <http://fsf.org/>

Everyone is permitted to copy and distribute verbatim copies of this license document, but changing it is not allowed.

Preamble

The GNU General Public License is a free, copyleft license for software and other kinds of works. The licenses for most software and other practical works are designed to take away your freedom to share and change the works. By contrast, the GNU General Public License is intended to guarantee your freedom to share and change all versions of a program-- to make sure it remains free software for all its users.

We, the Free Software Foundation, use the GNU General Public License for most of our software; it applies also to any other work released this way by its authors.

You can apply it to your programs, too. When we speak of free software, we are referring to freedom, not price. Our General Public Licenses are designed to make sure that you have the freedom to distribute copies of free software (and charge for them if you wish), that you receive source code or can get it if you want it, that you can change the software or use pieces of it in new free programs, and that you know you can do these things.

To protect your rights, we need to prevent others from denying you these rights or asking you to surrender the rights. Therefore, you have certain responsibilities if you distribute copies of the software, or if you modify it: responsibilities to respect the freedom of others. For example, if you distribute copies of such a program, whether gratis or for a fee, you must pass on to the recipients the same freedoms that you received. You must make sure that they, too, receive or can get the source code. And you must show them these terms so they know their rights. Developers that use the GNU GPL protect your rights with two steps: (1) assert copyright on the software, and (2) offer you this License giving you legal permission to copy, distribute and/or modify it. For the developers' and authors' protection, the GPL clearly explains that there is no arranty for this free software. For both users' and authors' sake, the GPL requires that modified versions be marked as changed, so that their problems will not be attributed erroneously to authors of previous versions. Some devices are designed to deny users access to install or run modified versions of the software inside them, although the manufacturer can do so. This is fundamentally incompatible with the aim of protecting users' freedom to change the software. The systematic pattern of such abuse occurs in the area of products for individuals to use, which is precisely where it is most unacceptable. Therefore, we have designed this version of the GPL to prohibit the practice for those products. If such problems arise substantially in other domains, we stand ready to extend this provision to those domains in future versions of the GPL, as needed to protect the freedom of users.

Finally, every program is threatened constantly by software patents. States should not allow patents to restrict development and use of software on general-purpose omputers, but in those that do, we wish to avoid the special anger that patents applied to a free program could make it ffectively proprietary. To prevent this, the GPL assures that atents cannot be used to render the program non-free. he precise terms and conditions for copying, distribution and modification follow.

TERMS AND CONDITIONS

0. Definitions.

"This License" refers to version 3 of the GNU General Public License.
Copyright" also means copyright-like laws that apply to other kinds of works, such as semiconductor masks. "The Program" refers to any copyrightable work licensed under this License. Each licensee is addressed as "you". "Licensees" and "recipients" may be individuals or organizations.

To "modify" a work means to copy from or adapt all or part of the work in a fashion requiring copyright permission, other than the making of an exact copy. The resulting work is called a "modified version" of the earlier work or a work "based on" the earlier work.

A "covered work" means either the unmodified Program or a work based on the Program.

To "propagate" a work means to do anything with it that, without permission, would make you directly or secondarily liable for infringement under applicable copyright law, except executing it on a computer or modifying a private copy.

Propagation includes copying, distribution (with or without modification), making available to the public, and in some countries other activities as well.

To "convey" a work means any kind of propagation that enables other parties to make or receive copies. Mere interaction with a user through a computer network, with no transfer of a copy, is not conveying. An interactive user interface displays "Appropriate Legal Notices" to the extent that it includes a convenient and prominently visible feature that (1) displays an appropriate copyright notice, and (2) tells the user that there is no warranty for the work (except to the extent that warranties are provided), that licensees may convey the work under this License, and how to view a copy of this License. If the interface presents a list of user commands or options, such as a menu, a prominent item in the list meets this criterion.

1. Source Code.

The "source code" for a work means the preferred form of the work for making modifications to it. "Object code" means any non-source form of a work.

A "Standard Interface" means an interface that either is an official standard defined by a recognized standards body, or, in the case of interfaces specified for a particular programming language, one that is widely used among developers working in that language.

The "System Libraries" of an executable work include anything, other than the work as a whole, that (a) is included in the normal form of packaging a Major Component, but which is not part of that Major Component, and (b) serves only to enable use of the work with that Major Component, or to implement a Standard Interface for which an implementation is available to the public in source code form. A "Major Component", in this context, means a major essential component (kernel, window system, and so on) of the specific operating system (if any) on which the executable work runs, or a compiler used to produce the work, or an object code interpreter used to run it.

The "Corresponding Source" for a work in object code form means all the source code needed to generate, install, and (for an executable work) run the object code and to modify the work, including scripts to control those activities.

However, it does not include the work's System Libraries, or generalpurpose tools or generally available free programs which are used unmodified in performing those activities but which are not part of the work. For example, Corresponding Source includes interface definition files associated with source files for the work, and the source code for shared libraries and dynamically linked subprograms that the work is specifically designed to require, such as by intimate data communication or control flow between those subprograms and other parts of the work.

The Corresponding Source need not include anything that users can regenerate automatically from other parts of the Corresponding Source. The Corresponding Source for a work in source code form is that same work.

2. Basic Permissions.

All rights granted under this License are granted for the term of copyright on the Program, and are irrevocable provided the stated conditions are met. This License explicitly affirms your unlimited permission to run the unmodified Program. The output from running a covered work is covered by this License only if the output, given its content, constitutes a covered work. This License acknowledges your rights of fair use or other equivalent, as provided by copyright law.

You may make, run and propagate covered works that you do not convey, without conditions so long as your license otherwise remains in force. You may convey covered works to others for the sole purpose of having them make modifications exclusively for you, or provide you with facilities for running those works, provided that you comply with the terms of this License in conveying all material for which you do not control copyright. Those thus making or running the covered works for you must do so exclusively on your behalf, under your direction and control, on terms that prohibit them from making any copies of your copyrighted material outside their relationship with you. Conveying under any other circumstances is permitted solely under the conditions stated below. Sublicensing is not allowed; section 10 makes it unnecessary.

3. Protecting Users' Legal Rights From anti-Circumvention Law.

No covered work shall be deemed part of an effective technological measure under any applicable law fulfilling obligations under article 11 of the WIPO copyright treaty adopted on 20 December 1996, or similar laws prohibiting or restricting circumvention of such measures.

When you convey a covered work, you waive any legal power to forbid circumvention of technological measures to the extent such circumvention is effected by exercising rights under this License with respect to the covered work, and you disclaim any intention to limit operation or modification of the work as a means of enforcing, against the work's users, your or third parties' legal rights to forbid circumvention of technological measures.

4. Conveying Verbatim Copies.

You may convey verbatim copies of the Program's source code as you receive it, in any medium, provided that you conspicuously and appropriately publish on each copy an appropriate copyright notice; keep intact all notices stating that this License and any non-permissive terms added in accord with section 7 apply to the code; keep intact all notices of the absence of any warranty; and give all recipients a copy of this License along with the Program. You may charge any price or no price for each copy that you convey, and you may offer support or warranty protection for a fee.

5. Conveying Modified Source Versions.

You may convey a work based on the Program, or the modifications to produce it from the Program, in the form of source code under the terms of section 4, provided that you also meet all of these conditions:

a) The work must carry prominent notices stating that you modified it, and giving a relevant date.

b) The work must carry prominent notices stating that it is released under this License and any conditions added under section 7. This requirement modifies the requirement in section 4 to "keep intact all notices".

c) You must license the entire work, as a whole, under this License to anyone who comes into possession of a copy. This License will therefore apply, along with any applicable section 7 additional terms, to the whole of the work, and all its parts, regardless of how they are packaged. This License gives no permission to license the work in any other way, but it does not invalidate such permission if you have separately received it.

d) If the work has interactive user interfaces, each must display Appropriate Legal Notices; however, if the Program has interactive interfaces that do not display Appropriate Legal Notices, your work need not make them do so. A compilation of a covered work with other separate and independent works, which are not by their nature extensions of the covered work, and which are not combined with it such as to form a larger program, in or on a volume of a storage or distribution medium, is called an "aggregate" if the compilation and its resulting copyright are not used to limit the access or legal rights of the compilation's users beyond what the individual works permit. Inclusion of a covered work in an aggregate does not cause this License to apply to the other parts of the aggregate.

6. Conveying Non-Source Forms.

You may convey a covered work in object code form under the terms of sections 4 and 5, provided that you also convey the machine-readable Corresponding Source under the terms of this License, in one of these ways:

a) Convey the object code in, or embodied in, a physical product (including a physical distribution medium), accompanied by the Corresponding Source fixed on a durable physical medium customarily used for software interchange.

b) Convey the object code in, or embodied in, a physical product (including a physical distribution medium), accompanied by a written offer, valid for at least three years and valid for as long as you offer spare parts or customer support for that product model, to give anyone who possesses the object code either (1) a copy of the Corresponding Source for all the software in the product that is covered by this License, on a durable physical medium customarily used for software interchange, for a price no more than your reasonable cost of physically performing this conveying of source, or (2) access to copy the Corresponding Source from a network server at no charge.

c) Convey individual copies of the object code with a copy of the written offer to provide the corresponding Source. This alternative is allowed only occasionally and noncommercially, and only if you received the object code with such an offer, in accord with subsection 6b.

d) Convey the object code by offering access from a designated place (gratis or for a charge), and offer equivalent access to the Corresponding Source in the same way through the same place at no further charge. You need not require recipients to copy the Corresponding Source along with the object code. If the place to copy the object code is a network server, the Corresponding Source may be on a different server (operated by you or a third party) that supports equivalent copying facilities, provided you maintain clear directions next to the object code saying where to find the Corresponding Source. Regardless of what server hosts the Corresponding Source, you remain obligated to ensure that it is available for as long as needed to satisfy these requirements.

e) Convey the object code using peer-to-peer transmission, provided you inform other peers where the object code and Corresponding Source of the work are being offered to the general public at no charge under subsection 6d. A separable portion of the object code, whose source code is excluded from the Corresponding Source as a System Library, need not be included in conveying the object code work. A "User Product" is either (1) a "consumer product", which means any tangible personal property which is normally used for personal, family, or household purposes, or (2) anything designed or sold for incorporation into a dwelling. In determining whether a product is a consumer product, doubtful cases shall be resolved in favor of coverage. For a particular product received by a particular user, "normally used" refers to a typical or common use of that class of product, regardless of the status of the particular user or of the way in which the particular user actually uses, or expects or is expected to use, the product. A product is a consumer product regardless of whether the product has substantial commercial, industrial or non-consumer uses, unless such uses represent the only significant mode of use of the product.

"Installation Information" for a User Product means any methods, procedures, authorization keys, or other information required to install and execute modified versions of a covered work in that User Product from a modified version of its Corresponding Source. The information must suffice to ensure that the continued functioning of the modified object code is in no case prevented or interfered with solely because modification has been made. If you convey an object code work under this section in, or with, or specifically for use in, a User Product, and the conveying occurs as part of a transaction in which the right of possession and use of the User Product is transferred to the recipient in perpetuity or for a fixed term (regardless of how the transaction is characterized), the Corresponding Source conveyed under this section must be accompanied by the Installation Information. But this requirement does not apply if neither you nor any third party retains the ability to install modified object code on the User Product (for example, the work has been installed in ROM).

The requirement to provide Installation Information does not include a requirement to continue to provide support service, warranty, or updates for a work that has been modified or installed by the recipient, or for the User Product in which it has been modified or installed. Access to a network may be denied when the modification itself materially and adversely affects the operation of the network or violates the rules and protocols for communication across the network. Corresponding Source conveyed, and Installation Information provided, in accord with this section must be in a format that is publicly documented (and with an implementation available to the public in source code form), and must require no special password or key for unpacking, reading or copying.

7. Additional Terms.

"Additional permissions" are terms that supplement the terms of this License by making exceptions from one or more of its conditions. Additional permissions that are applicable to the entire Program shall be treated as though they were included in this License, to the extent that they are valid under applicable law. If additional permissions apply only to part of the Program, that part may be used separately under those permissions, but the entire Program remains governed by this License without regard to the additional permissions. When you convey a copy of a covered work, you may at your option remove any additional permissions from that copy, or from any part of it. (Additional permissions may be written to require their own removal in certain cases when you modify the work.) You may place additional permissions on material, added by you to a covered work, for which you have or can give appropriate copyright permission. Notwithstanding any other provision of this License, for material you add to a covered work, you may (if authorized by the copyright holders of that material) supplement the terms of this License with terms:

a) Disclaiming warranty or limiting liability differently from the terms of sections 15 and 16 of this License; or

b) Requiring preservation of specified reasonable legal notices or author attributions in that material or in the Appropriate Legal Notices displayed by works containing it; or

c) Prohibiting misrepresentation of the origin of that material, or requiring that modified versions of such material be marked in reasonable ways as different from the original version; or

d) Limiting the use for publicity purposes of names of licensors or authors of the material; or

e) Declining to grant rights under trademark law for use of some trade names, trademarks, or service marks; or

f) Requiring indemnification of licensors and authors of that material by anyone who conveys the material (or modified versions of it) with contractual assumptions of liability to the recipient, for any liability that these contractual assumptions directly impose on those licensors and authors. All other non-permissive additional terms are considered "further restrictions" within the meaning of section 10. If the Program as you received it, or any part of it, contains a notice stating that it is governed by this License along with a term that is a further restriction, you may remove that term. If a license document contains a further restriction but permits relicensing or conveying under this License, you may add to a covered work material governed by the terms of that license document, provided that the further restriction does not survive such relicensing or conveying. If you add terms to a covered work in accord with this section, you must place, in the relevant source files, a statement of the additional terms that apply to those files, or a notice indicating where to find the applicable terms. Additional terms, permissive or non-permissive, may be stated in the form of a separately written license, or stated as exceptions; the above requirements apply either way.

8. Termination.

You may not propagate or modify a covered work except as expressly provided under this License. Any attempt otherwise to propagate or modify it is void, and will automatically terminate your rights under this License (including any patent licenses granted under the third paragraph of section 11).

However, if you cease all violation of this License, then your license from a particular copyright holder is reinstated (a) provisionally, unless and until the copyright holder explicitly and finally terminates your license, and (b) permanently, if the copyright holder fails to notify you of the violation by some reasonable means prior to 60 days after the cessation. Moreover, your license from a particular copyright holder is reinstated permanently if the copyright holder notifies you ofthe violation by some reasonable means, this is the first time you have received notice of violation of this License (for any work) from that copyright holder, and you cure the violation prior to 30 days after your receipt of the notice. Termination of your rights under this section does not terminate the licenses of parties who have received copies or rights from you under this License. If your rights have been terminated and not permanently reinstated, you do not qualify to receive new licenses for the same material under section 10.

9. Acceptance Not Required for Having Copies.

You are not required to accept this License in order to receive or run a copy of the Program. Ancillary propagation of a covered work occurring solely as a consequence of using peer-to-peer transmission to receive a copy likewise does not require acceptance. However, nothing other than this License grants you permission to propagate or modify any covered work. These actions infringe copyright if you do not accept this License. Therefore, by modifying or propagating a covered work, you indicate your acceptance of this License to do so.

10. Automatic Licensing of Downstream Recipients.

Each time you convey a covered work, the recipient automatically receives a license from the original licensors, to run, modify and propagate that work, subject to this License. You are not responsible for enforcing compliance by third parties with this License. An "entity transaction" is a transaction transferring control of an organization, or substantially all assets of one, or subdividing an organization, or merging organizations. If propagation of a covered work results from an entity transaction, each party to that transaction who receives a copy of the work also receives whatever licenses to the work the party's predecessor in interest had or could give under the previous paragraph, plus a right to possession of the Corresponding Source of the work from the predecessor in interest, if the predecessor has it or can get it with reasonable efforts. You may not impose any further restrictions on the exercise of the rights granted or affirmed under this License. For example, you may not impose a license fee, royalty, or other charge for exercise of rights granted under this License, and you may not initiate litigation (including a cross-claim or counterclaim in a lawsuit) alleging that any patent claim is infringed by making, using, selling, offering for sale, or importing the Program or any portion of it.

11. Patents.

A "contributor" is a copyright holder who authorizes use under this License of the Program or a work on which the Program is based. The work thus licensed is called the contributor's "contributor version". A contributor's "essential patent claims" are all patent claims owned or controlled by the contributor, whether already acquired or hereafter acquired, that would be infringed by some manner, permitted by this License, of making, using, or selling its contributor version, but do not include claims that would be infringed only as a consequence of further modification of the contributor version. For purposes of this definition, "control" includes the right to grant patent sublicenses in a manner consistent with the requirements of this License. Each contributor grants you a non-exclusive, worldwide, royaltyfree patent license under the contributor's essential patent claims, to make, use, sell, offer for sale, import and otherwise run, modify and propagate the contents of its contributor version.

In the following three paragraphs, a "patent license" is any express agreement or commitment, however denominated, not to enforce a patent (such as an express permission to practice a patent or covenant not to sue for patent infringement). To "grant" such a patent license to a party means to make such an agreement or commitment not to enforce a patent against the party. If you convey a covered work, knowingly relying on a patent license, and the Corresponding Source of the work is not available for anyone to copy, free of charge and under the terms of this License, through a publicly available network server or other readily accessible means, then you must either (1) cause the Corresponding Source to be so available, or (2) arrange to deprive yourself of the benefit of the patent license for this particular work, or (3) arrange, in a manner consistent with the requirements of this License, to extend the patent license to downstream recipients. "Knowingly relying" means you have actual knowledge that, but for the patent license, your conveying the covered work in a country, or your recipient's use of the covered work in a country, would infringe one or more identifiable patents in that country that you have reason to believe are valid. If, pursuant to or in connection with a single transaction or arrangement, you convey, or propagate by procuring conveyance of, a covered work, and grant a

patent license to some of the parties receiving the covered work authorizing them to use, propagate, modify or convey a specific copy of the covered work, then the patent license you grant is automatically extended to all recipients of the covered work and works based on it. A patent license is "discriminatory" if it does not include within the scope of its coverage, prohibits the exercise of, or is conditioned on the non-exercise of one or more of the rights that are specifically granted under this License. You may not convey a covered work if you are a party to an arrangement with a third party that is in the business of distributing software, under which you make payment to the third party based on the extent of your activity of conveying the work, and under which the third party grants, to any of the parties who would receive the covered work from you, a discriminatory patent license

(a) in connection with copies of the covered work conveyedby you (or copies made from those copies), or

(b) primarily for and in connection with specific products or compilations that contain the covered work, unless you entered into that arrangement, or that patent license was granted, prior to 28 March 2007. Nothing in this License shall be construed as excluding or limiting any implied license or other defenses to infringement that may otherwise be available to you under applicable patent law.

12. No Surrender of Others' Freedom.

If conditions are imposed on you (whether by court order, agreement or otherwise) that contradict the conditions of this License, they do not excuse you from the conditions of thisLicense. If you cannot convey a covered work so as to satisfy simultaneously your obligations under this License and any other pertinent obligations, then as a consequence you may not convey it at all. For example, if you agree to terms that obligate you to collect a royalty for further conveying from those to whom you convey the Program, the only way you could satisfy both those terms and this License would be to refrain entirely from conveying the Program.

13. Use with the GNU Affero General Public License.

Notwithstanding any other provision of this License, you have permission to link or combine any covered work with a work licensed under version 3 of the GNU Affero General Public License into a single combined work, and to convey the resulting work. The terms of this License will continue to apply to the part which is the covered work, but the special requirements of the GNU Affero General Public License, section 13, concerning interaction through a network will apply to the combination as such.

14. Revised Versions of this License.

The Free Software Foundation may publish revised and/ or new versions of the GNU General Public License from time to time. Such new versions will be similar in spirit to the present version, but may differ in detail to address new problems or concerns.

Each version is given a distinguishing version number. If the Program specifies that a certain numbered version of the GNU General Public License "or any later version" applies to it, you have the option of following the terms and conditions either of that numbered version or of any later version published by the Free Software Foundation. If the Program does not specify a version number of the GNU General Public License, you may choose any version ever published by the Free Software Foundation. If the Program specifies that a proxy can decide which future versions of the GNU General Public License can be used, that proxy's public statement of acceptance of a version permanently authorizes you to choose that version for the Program. Later license versions may give you additional or different permissions. However, no additional obligations are imposed on any author or copyright holder as a result of your choosing to follow a later version.

15. Disclaimer of Warranty.

THERE IS NO WARRANTY FOR THE PROGRAM, TO THE EXTENT PERMITTED BY APPLICABLE LAW. EXCEPT WHEN OTHERWISE STATED IN WRITING THE COPYRIGHT HOLDERS AND/OR OTHER PARTIES PROVIDE THE PROGRAM "AS IS" WITHOUT WARRANTY OF ANY KIND, EITHER EXPRESSED OR IMPLIED, INCLUDING, BUT NOT LIMITED TO, THE IMPLIED WARRANTIES OF MERCHANTABILITY AND FITNESS FOR A PARTICULAR PURPOSE. THE ENTIRE RISK AS TO THE QUALITY AND PERFORMANCE OF THE PROGRAM IS WITH YOU. SHOULD THE PROGRAM PROVE DEFECTIVE, YOU ASSUME THE COST OF ALL NECESSARY SERVICING, REPAIR OR CORRECTION.

16. Limitation of Liability.

IN NO EVENT UNLESS REQUIRED BY APPLICABLE LAW OR AGREED TO IN WRITING WILL ANY COPYRIGHT HOLDER, OR ANY OTHER PARTY WHO MODIFIES AND/OR CONVEYS THE PROGRAM AS PERMITTED ABOVE, BE LIABLE TO YOU FOR DAMAGES, INCLUDING ANY GENERAL, SPECIAL, INCIDENTAL OR CONSEQUENTIAL DAMAGES ARISING OUT OF THE USE OR INABILITY TO USE THE PROGRAM (INCLUDING BUT NOT LIMITED TO LOSS OF DATA OR DATA BEING RENDERED INACCURATE OR LOSSES SUSTAINED BY YOU OR THIRD PARTIES OR A FAILURE OF THE PROGRAM TO OPERATE WITH ANY OTHER PROGRAMS), EVEN IF SUCH HOLDER OR OTHER PARTY HAS BEEN ADVISED OF THE POSSIBILITY OF SUCH DAMAGES.

17. Interpretation of Sections 15 and 16.

If the disclaimer of warranty and limitation of liability provided above cannot be given local legal effect according to their terms, reviewing courts shall apply local law that most closely approximates an absolute waiver of all civil liability in connection with the Program, unless a warranty or assumption of liability accompanies a copy of the Program in return for a fee.

OpenSSL Combined License

The OpenSSL toolkit stays under a dual license, i.e. both the conditions of the OpenSSL License and the original SSLeay license apply to the toolkit.

See below for the actual license texts. Actually both licenses are BSD-style Open Source licenses. In case of any license issues related to OpenSSL please contact openssl-core@openssl.org.

Component Name	License	URL
openssl-1.0.2e	OpenSSL	Combined License http://www.openssl.org/source

Copyright (c) 1998-2011 The OpenSSL Project. All rights reserved.

Redistribution and use in source and binary forms, with or without modification, are permitted provided that the following conditions are met:

1. Redistributions of source code must retain the above copyright notice, this list of conditions and the following disclaimer.

2. Redistributions in binary form must reproduce the above copyright notice, this list of conditions and the following disclaimer in the documentation and/or other materials provided with the distribution.

3. All advertising materials mentioning features or use of this software must display the following acknowledgment: "This product includes software developed by the OpenSSL Projectfor use in the OpenSSL Toolkit. (http://www.openssl.org/)"

4. The names "OpenSSL Toolkit" and "OpenSSL Project" must not be used to endorse or promote products derived from this software without prior written permission. For written permission, please contact openssl-core@openssl.org.

5. Products derived from this software may not be called "OpenSSL" nor may "OpenSSL" appear in their names without prior written permission of the OpenSSL Project.

6. Redistributions of any form whatsoever must retain the following acknowledgment: "This product includes software developed by the OpenSSL Project for use in the OpenSSL Toolkit (http://www.openssl.org/)"

THIS SOFTWARE IS PROVIDED BY THE OpenSSL PROJECT ``AS IS'' AND ANY EXPRESSED OR IMPLIED WARRANTIES, INCLUDING, BUT NOT LIMITED TO, THE IMPLIED WARRANTIES OF MERCHANTABILITY AND FITNESS FOR A PARTICULAR PURPOSE ARE DISCLAIMED. IN NO EVENT SHALL THE OpenSSL PROJECT OR ITS CONTRIBUTORS BE LIABLE FOR ANY DIRECT, INDIRECT, INCIDENTAL, SPECIAL, EXEMPLARY, OR CONSEQUENTIAL DAMAGES (INCLUDING, BUT NOT LIMITED TO, PROCUREMENT OF SUBSTITUTE GOODS OR SERVICES; LOSS OF USE, DATA, OR PROFITS; OR BUSINESS INTERRUPTION) HOWEVER CAUSED AND ON ANY THEORY OF LIABILITY, WHETHER IN CONTRACT, STRICT LIABILITY, OR TORT (INCLUDING NEGLIGENCE OR OTHERWISE) ARISING IN ANY WAY OUT OF THE USE OF THIS SOFTWARE, EVEN IF ADVISED OF THE POSSIBILITY OF SUCH DAMAGE.

This product includes cryptographic software written by Eric Young(eay@cryptsoft.com). This product includes software written by Tim Hudson (tjh@cryptsoft.com).

Original SSLeay License

Copyright (C) 1995-1998 Eric Young (eay@cryptsoft.com) All rights reserved.

This package is an SSL implementation written by Eric Young (eay@cryptsoft.com).

The implementation was written so as to conform with Netscapes SSL.

This library is free for commercial and non-commercial use as long as the following conditions are aheared to. The following conditions apply to all code found in this distribution, be it the RC4, RSA, lhash, DES, etc., code; not just the SSL code. The SSL documentation included with this distribution is covered by the same copyright terms except that the holder is Tim Hudson (tjh@cryptsoft.com).

Copyright remains Eric Young's, and as such any Copyright notices in the code are not to be removed. If this package is used in a product, Eric Young should be given attribution as the author of the parts of the library used. This can be in the form of a textual message at program startup or in documentation (online or textual) provided with the package. Redistribution and use in source and binary forms, with or without modification, are permitted provided that the following conditions are met:

1. Redistributions of source code must retain the copyright notice, this list of conditions and the following disclaimer.

2. Redistributions in binary form must reproduce the above copyright notice, this list of conditions and the following disclaimer in the documentation and/or other materials provided with the distribution.

3. All advertising materials mentioning features or use of this software must display the following acknowledgement: "This product includes cryptographic software written by Eric Young (eay@cryptsoft.com)" The word 'cryptographic' can be left out if the rouines from the library being used are not cryptographic related :-).

4. If you include any Windows specific code (or a derivative thereof) from the apps directory (application code) you must include an acknowledgement: "This product includes software written by Tim Hudson (tjh@cryptsoft. com)"

THIS SOFTWARE IS PROVIDED BY ERIC YOUNG ``AS IS'' AND ANY EXPRESS OR IMPLIED WARRANTIES, INCLUDING, BUT NOT LIMITED TO, THE IMPLIED WARRANTIES OF MERCHANTABILITY AND FITNESS FOR A PARTICULAR PURPOSE ARE DISCLAIMED. IN NO EVENT SHALL THE AUTHOR OR CONTRIBUTORS BE LIABLE FOR ANY DIRECT, INDIRECT, INCIDENTAL, SPECIAL, EXEMPLARY, OR CONSEQUENTIAL DAMAGES (INCLUDING, BUT NOT LIMITED TO, PROCUREMENT OF SUBSTITUTE GOODS OR SERVICES; LOSS OF USE, DATA, OR PROFITS; OR BUSINESS INTERRUPTION) HOWEVER CAUSED AND ON ANY THEORY OF LIABILITY, WHETHER IN CONTRACT, STRICT LIABILITY, OR TORT (INCLUDING NEGLIGENCE OR OTHERWISE) ARISING IN ANY WAY OUT OF THE USE OF THIS SOFTWARE, EVEN IF ADVISED OF THE POSSIBILITY OF SUCH DAMAGE.

The licence and distribution terms for any publically available version or derivative of this code cannot be changed. i.e. this code cannot simply be copied and put under another distribution licence [including the GNU Public Licence.]

BSD License

Some software components of this product incorporate source code covered under the BSD license as follows.

Component Name	License	URL
net-snmp-5.7.3	BSD	http://www.net-snmp.org/about/license.html
pcre-8.38	BSD	
libcap-1.7.4	BSD 2.0	http://www.kernel.org/pub/linux/libs/security/linux-privs/libcap2
lighttpd-1.4.35	BSD 2.0	http://www.opensource.org/licenses/bsd-license.html
MiniUPnP Project Client	BSD 2.0	
pppd-2.4.7	BSD 2.0	http://opensource.org/licenses/BSD-3-Clause

lighttpd is a secure, fast, compliant, and very flexible webserver that has been optimized for high-performance environments. It has a very low memory footprint compared to other webservers and takes care of cpuload. Its advanced feature-set (FastCGI, CGI, Auth, Output-Compression, URL-Rewriting and many more) make lighttpd the perfect webserver-software for every server that suffers load problems. Simple Network Management Protocol (SNMP) is an Internetstandard protocol for managing devices on IP networks. It is used mostly in network management systems to monitor the devices attached to the network for conditions that need administrative attention. Net-SNMP is a suite of applications used to implement SNMP v1, SNMP v2c and SNMP v3 using both IPv4 and IPv6. For more additional information, send email to help.cctv@hanwha.com.

Copyright (C) 2004, Kneschke, incremental

All rights reserved.

Redistribution and use in source and binary forms, with or without modification, are permitted provided that the following conditions are met :

- Redistributions of source code must retain the above copyright notice, this list of conditions and the following disclaimer.
- Redistributions in binary form must reproduce the above copyright notice, this list of conditions and the following disclaimer in the documentation and/or other materials provided with the distribution.
- Neither the name of the 'incremental' nor the names of its contributors may be used to endorse or promote products derived from this software without specific prior written permission.

THIS SOFTWARE IS PROVIDED BY THE COPYRIGHT HOLDERS AND CONTRIBUTORS “AS IS” AND ANY EXPRESS OR IMPLIED WARRANTIES, INCLUDING, BUT NOT LIMITED TO, THE IMPLIED WARRANTIES OF MERCHANTABILITY AND FITNESS FOR A PARTICULAR PURPOSE ARE DISCLAIMED. IN NO EVENT SHALL THE COPYRIGHT OWNER OR CONTRIBUTORS BE LIABLE FOR ANY DIRECT, INDIRECT, INCIDENTAL, SPECIAL, EXEMPLARY, OR CONSEQUENTIAL DAMAGES (INCLUDING, BUT NOT LIMITED TO, PROCUREMENT OF SUBSTITUTE GOODS OR SERVICES; LOSS OF USE, DATA, OR PROFITS; OR BUSINESS INTERRUPTION) HOWEVER CAUSED AND ON ANY THEORY OF LIABILITY, WHETHER IN CONTRACT, STRICT LIABILITY, OR TORT (INCLUDING NEGLIGENCE OR OTHERWISE) ARISING IN ANY WAY OUT OF THE USE OF THIS SOFTWARE, EVEN IF ADVISED OF THE POSSIBILITY OF SUCH DAMAGE.

Copyright (c) 1998-2001 University College London

All rights reserved.

Redistribution and use in source and binary forms, with or without modification, is permitted provided that the following conditions are met :

1. Redistributions of source code must retain the above copyright notice, this list of conditions and the following disclaimer.

2. Redistributions in binary form must reproduce the above copyright notice, this list of conditions and the following disclaimer in the documentation and/or other materials provided with the distribution.

3. All advertising materials mentioning features or use of this software must display the following acknowledgement: This product includes software developed by the Computer Science Department at University College London.

4. Neither the name of the University nor of the Department may be used to endorse or promote products derived from this software without specific prior written permission.

THIS SOFTWARE IS PROVIDED BY THE AUTHORS AND CONTRIBUTORS ``AS IS" AND ANY EXPRESSED OR IMPLIED WARRANTIES, INCLUDING, BUT NOT LIMITED TO, THE IMPLIED WARRANTIES OF MERCHANTABILITY AND FITNESS FOR A PARTICULAR PURPOSEARE DISCLAIMED. IN NO EVENT SHALL THE AUTHORS OR CONTRIBUTORS BE LIABLE FOR ANY DIRECT, INDIRECT, INCIDENTAL, SPECIAL, EXEMPLARY, OR CONSEQUENTIAL DAMAGES (INCLUDING, BUT NOT LIMITED TO, PROCUREMENT OF SUBSTITUTE GOODS OR SERVICES; LOSS OF USE, DATA, OR PROFITS; OR BUSINESS INTERRUPTION) HOWEVER CAUSED AND ON ANY THEORY OF LIABILITY, WHETHER IN CONTRACT, STRICT LIABILITY, OR TORT (INCLUDING NEGLIGENCE OR OTHERWISE) ARISING IN ANY WAY OUT OF THE USE OF THIS SOFTWARE, EVEN IF ADVISED OF THE POSSIBILITY OF SUCH DAMAGE.

Copyright (c) 1988, 1989, 1990, 1991, 1993, 1994, 1995, 1996 The Regents of the University of California.

All rights reserved.

Redistribution and use in source and binary forms, with or without modification, are permitted provided that the following conditions are met:

1. Redistributions of source code must retain the above copyright notice, this list of conditions and the following disclaimer.

2. Redistributions in binary form must reproduce the above copyright notice, this list of conditions and the following disclaimer in the documentation and/or other materials provided with the distribution.

3. Neither the name of the Regents of the University of California nor the names of its contributors may be used to endorse or promote products derived from this software without specific prior written permission.

THIS SOFTWARE IS PROVIDED BY THE COPYRIGHT HOLDERS AND CONTRIBUTORS "AS IS" AND ANY EXPRESS OR IMPLIED WARRANTIES, INCLUDING, BUT NOT LIMITED TO, THE IMPLIED WARRANTIES OF MERCHANTABILITY AND FITNESS FOR A PARTICULAR PURPOSE ARE DISCLAIMED. IN NO EVENT SHALL THE COPYRIGHT OWNER OR CONTRIBUTORS BE LIABLE FOR ANY DIRECT, INDIRECT, INCIDENTAL, SPECIAL, EXEMPLARY, OR CONSEQUENTIAL DAMAGES (INCLUDING, BUT NOT LIMITED TO, PROCUREMENT OF SUBSTITUTE GOODS OR SERVICES; LOSS OF USE, DATA, OR PROFITS; OR BUSINESS INTERRUPTION) HOWEVER CAUSED AND ON ANY THEORY OF LIABILITY, WHETHER IN CONTRACT, STRICT LIABILITY, OR TORT (INCLUDING NEGLIGENCE OR OTHERWISE) ARISING IN ANY WAY OUT OF THE USE OF THIS SOFTWARE, EVEN IF ADVISED OF THE POSSIBILITY OF SUCH DAMAGE.

Copyright (c) 2006, Creative Labs Inc

All rights reserved.

Redistribution and use in source and binary forms, with or without modification, are permitted provided that the following conditions are met:

1. Redistributions of source code must retain the above copyright notice, this list of conditions and the following disclaimer.

2. Redistributions in binary form must reproduce the above copyright notice, this list of conditions and the following disclaimer in the documentation and/or other materials provided with the distribution.

3. Neither the name of the Creative Labs nor the names of its contributors may be used to endorse or promote products derived from this software without specific prior written permission.

THIS SOFTWARE IS PROVIDED BY THE COPYRIGHT HOLDERS AND CONTRIBUTORS "AS IS" AND ANY EXPRESS OR IMPLIED WARRANTIES, INCLUDING, BUT NOT LIMITED TO, THE IMPLIED WARRANTIES OF MERCHANTABILITY AND FITNESS FOR A PARTICULAR PURPOSE ARE DISCLAIMED. IN NO EVENT SHALL THE COPYRIGHT OWNER OR CONTRIBUTORS BE LIABLE FOR ANY DIRECT, INDIRECT, INCIDENTAL, SPECIAL, EXEMPLARY, OR CONSEQUENTIAL DAMAGES (INCLUDING, BUT NOT LIMITED TO, PROCUREMENT OF SUBSTITUTE GOODS OR SERVICES; LOSS OF USE, DATA, OR PROFITS; OR BUSINESS INTERRUPTION) HOWEVER CAUSED AND ON ANY THEORY OF LIABILITY, WHETHER IN CONTRACT, STRICT LIABILITY, OR TORT (INCLUDING NEGLIGENCE OR OTHERWISE) ARISING IN ANY WAY OUT OF THE USE OF THIS SOFTWARE, EVEN IF ADVISED OF THE POSSIBILITY OF SUCH DAMAGE.

Copyright (c) 2005-2012, Thomas BERNARD

All rights reserved.

Redistribution and use in source and binary forms, with or without modification, are permitted provided that the following conditions are met:

1. Redistributions of source code must retain the above copyright notice, this list of conditions and the following disclaimer.

2. Redistributions in binary form must reproduce the above copyright notice, this list of conditions and the following disclaimer in the documentation and/or other materials provided with the distribution.

3. Neither the name of Thomas BERNARD nor the names of its contributors may be used to endorse or promote products derived from this software without specific prior written permission.

THIS SOFTWARE IS PROVIDED BY THE COPYRIGHT HOLDERS AND CONTRIBUTORS "AS IS" AND ANY EXPRESS OR IMPLIED WARRANTIES, INCLUDING, BUT NOT LIMITED TO, THE IMPLIED WARRANTIES OF MERCHANTABILITY AND FITNESS FOR A PARTICULAR PURPOSE ARE DISCLAIMED. IN NO EVENT SHALL THE COPYRIGHT OWNER OR CONTRIBUTORS BE LIABLE FOR ANY DIRECT, INDIRECT, INCIDENTAL, SPECIAL, EXEMPLARY, OR CONSEQUENTIAL DAMAGES (INCLUDING, BUT NOT LIMITED TO, PROCUREMENT OF SUBSTITUTE GOODS OR SERVICES; LOSS OF USE, DATA, OR PROFITS; OR BUSINESS INTERRUPTION) HOWEVER CAUSED AND ON ANY THEORY OF LIABILITY, WHETHER IN CONTRACT, STRICT LIABILITY, OR TORT (INCLUDING NEGLIGENCE OR OTHERWISE) ARISING IN ANY WAY OUT OF THE USE OF THIS SOFTWARE, EVEN IF ADVISED OF THE POSSIBILITY OF SUCH DAMAGE.

Various copyrights apply to this package, listed in various separate parts below. Please make sure that you read all the parts.

Part 1: CMU/UCD copyright notice: (BSD like)

Copyright 1989, 1991, 1992 by Carnegie Mellon University Derivative Work - 1996, 1998-2000

Copyright 1996, 1998-2000 The Regents of the University of California

All Rights Reserved

Permission to use, copy, modify and distribute this software and its documentation for any purpose and without fee is hereby granted, provided that the above copyright notice appears in all copies and that both that copyright notice and this permission notice appear in supporting documentation, and that the name of CMU and The Regents of the University of California not be used in advertising or publicity pertaining to distribution of the software without specific written permission.

CMU AND THE REGENTS OF THE UNIVERSITY OF CALIFORNIA DISCLAIM ALL WARRANTIES WITH REGARD TO THIS SOFTWARE, INCLUDING ALL IMPLIED WARRANTIES OF MERCHANTABILITY AND FITNESS. IN NO EVENT SHALL CMU OR THE REGENTS OF THE UNIVERSITY OF CALIFORNIA BE LIABLE FOR ANY SPECIAL, INDIRECT OR CONSEQUENTIAL DAMAGES OR ANY DAMAGES WHATSOEVER RESULTING FROM THE LOSS OF USE, DATA OR PROFITS, WHETHER IN AN ACTION OF CONTRACT, NEGLIGENCE OR OTHER TORTIOUS ACTION, ARISING OUT OF OR IN CONNECTION WITH THE USE OR PERFORMANCE OF THIS SOFTWARE.

Part 2 : Networks Associates Technology, Inc copyright notice (BSD)

Copyright (c) 2001-2003, Networks Associates Technology, Inc

All rights reserved.

Redistribution and use in source and binary forms, with or without modification, are permitted provided that the following conditions are met: yy Redistributions of source code must retain the above copyright notice, this list of conditions and the following disclaimer. yy Redistributions in binary form must reproduce the above copyright notice, this list of conditions and the following disclaimer in the documentation and/or other materials provided with the distribution. yy Neither the name of the Networks Associates Technology, Inc nor the names of its contributors may be used to endorse or promote products derived from this software without specific prior written permission.

THIS SOFTWARE IS PROVIDED BY THE COPYRIGHT HOLDERS AND CONTRIBUTORS “AS IS” AND ANY EXPRESS OR IMPLIED WARRANTIES, INCLUDING, BUT NOT LIMITED TO, THE IMPLIED WARRANTIES OF MERCHANTABILITY AND FITNESS FOR A PARTICULAR PURPOSE ARE DISCLAIMED. IN NO EVENT SHALL THE COPYRIGHT HOLDERS OR CONTRIBUTORS BE LIABLE FOR ANY DIRECT, INDIRECT, INCIDENTAL, SPECIAL, EXEMPLARY, OR CONSEQUENTIAL DAMAGES (INCLUDING, BUT NOT LIMITED TO, PROCUREMENT OF SUBSTITUTE GOODS OR SERVICES; LOSS OF USE, DATA, OR PROFITS; OR BUSINESS INTERRUPTION) HOWEVER CAUSED AND ON ANY THEORY OF LIABILITY, WHETHER IN CONTRACT, STRICT LIABILITY, OR TORT (INCLUDING NEGLIGENCE OR OTHERWISE) ARISING IN ANY WAY OUT OF THE USE OF THIS SOFTWARE, EVEN IF ADVISED OF THE POSSIBILITY OF SUCH DAMAGE.

Part 3: Cambridge Broadband Ltd. copyrightnotice (BSD)

Portions of this code are copyright (c) 2001-2003, Cambridge Broadband Ltd.

All rights reserved.

Redistribution and use in source and binary forms, with or without modification, are permitted provided that the following conditions are met: yy Redistributions of source code must retain the above copyright notice, this list of conditions and the following disclaimer. yy Redistributions in binary form must reproduce the above copyright notice, this list of conditions and the following disclaimer in the documentation and/or other materials provided with the distribution. yy The name of Cambridge Broadband Ltd. may not be used to endorse or promote products derived from this software without specific prior written permission.

THIS SOFTWARE IS PROVIDED BY THE COPYRIGHT HOLDER “AS IS" AND ANY EXPRESS OR IMPLIED WARRANTIES, INCLUDING, BUT NOT LIMITED TO, THE IMPLIED WARRANTIES OF MERCHANTABILITY AND FITNESS FOR A PARTICULAR PURPOSE ARE DISCLAIMED. IN NO EVENT SHALL THE COPYRIGHT HOLDER BE LIABLE FOR ANY DIRECT, INDIRECT, INCIDENTAL, SPECIAL, EXEMPLARY, OR CONSEQUENTIAL DAMAGES (INCLUDING, BUT NOT LIMITED TO, PROCUREMENT OF SUBSTITUTE GOODS OR SERVICES; LOSS OF USE, DATA, OR PROFITS; OR BUSINESS INTERRUPTION) HOWEVER CAUSED AND ON ANY THEORY OF LIABILITY, WHETHER IN CONTRACT, STRICT LIABILITY, OR TORT (INCLUDING NEGLIGENCE OR OTHERWISE) ARISING IN ANY WAY OUT OF THE USE OF THIS SOFTWARE, EVEN IF ADVISED OF THE POSSIBILITY OF SUCH DAMAGE.

Part 4: Sun Microsystems, Inc. copyright notice

(BSD)

Copyright (c) 2003 Sun Microsystems, Inc., 4150 Network

Circle, Santa Clara, California 95054, U.S.A.

All rights reserved.

Use is subject to license terms below. This distribution may include materials developed by third parties. Sun, Sun Microsystems, the Sun logo and Solaris are trademarks or registered trademarks of Sun Microsystems, Inc. in the U.S. and other countries. Redistribution and use in source and binary forms, with or without modification, are permitted provided that the following conditions are met: yy Redistributions of source code must retain the above copyright notice, this list of conditions and the following disclaimer. yy Redistributions in binary form must reproduce the above copyright notice, this list of conditions and the following disclaimer in the documentation and/or other materials provided with the distribution. yy Neither the name of the Sun Microsystems, Inc. nor the names of its contributors may be used to endorse or promote products derived from this software without specific prior written permission.

THIS SOFTWARE IS PROVIDED BY THE COPYRIGHT HOLDERS AND CONTRIBUTORS “AS IS” AND ANY EXPRESS OR IMPLIED WARRANTIES, INCLUDING, BUT NOT LIMITED TO, THE IMPLIED WARRANTIES OF MERCHANTABILITY AND FITNESS FOR A PARTICULAR PURPOSE ARE DISCLAIMED. IN NO EVENT SHALL THE COPYRIGHT HOLDERS OR CONTRIBUTORS BE LIABLE FOR ANY DIRECT, INDIRECT, INCIDENTAL, SPECIAL, EXEMPLARY, OR CONSEQUENTIAL DAMAGES (INCLUDING, BUT NOT LIMITED TO, PROCUREMENT OF SUBSTITUTE GOODS OR SERVICES; LOSS OF USE, DATA, OR PROFITS; OR BUSINESS INTERRUPTION) HOWEVER CAUSED AND ON ANY THEORY OF LIABILITY, WHETHER IN CONTRACT, STRICT LIABILITY, OR TORT (INCLUDING NEGLIGENCE OR OTHERWISE) ARISING IN ANY WAY OUT OF THE USE OF THIS SOFTWARE, EVEN IF ADVISED OF THE POSSIBILITY OF SUCH DAMAGE.

Part 5: Sparta, Inc copyright notice (BSD)

Copyright (c) 2003-2009, Sparta, Inc

All rights reserved.

Redistribution and use in source and binary forms, with or without modification, are permitted provided that the following conditions are met: yy Redistributions of source code must retain the above copyright notice, this list of conditions and the following disclaimer. yy Redistributions in binary form must reproduce the

above copyright notice, this list of conditions and the following disclaimer in the documentation and/or other materials provided with the distribution. yy Neither the name of Sparta, Inc nor the names of its contributors may be used to endorse or promote products derived from this software without specific prior written permission.

THIS SOFTWARE IS PROVIDED BY THE COPYRIGHT HOLDERS AND CONTRIBUTORS “AS IS” AND ANY EXPRESS OR IMPLIED WARRANTIES, INCLUDING, BUT NOT LIMITED TO, THE IMPLIED WARRANTIES OF MERCHANTABILITY AND FITNESS FOR A PARTICULAR PURPOSE ARE DISCLAIMED. IN NO EVENT SHALL THE COPYRIGHT HOLDERS OR CONTRIBUTORS BE LIABLE FOR ANY DIRECT, INDIRECT, INCIDENTAL, SPECIAL, EXEMPLARY, OR CONSEQUENTIAL DAMAGES (INCLUDING, BUT NOT LIMITED TO, PROCUREMENT OF SUBSTITUTE GOODS OR SERVICES; LOSS OF USE, DATA, OR PROFITS; OR BUSINESS INTERRUPTION) HOWEVER CAUSED AND ON ANY THEORY OF LIABILITY, WHETHER IN CONTRACT, STRICT LIABILITY, OR TORT (INCLUDING NEGLIGENCE OR OTHERWISE) ARISING IN ANY WAY OUT OF THE USE OF THIS SOFTWARE, EVEN IF ADVISED OF THE POSSIBILITY OF SUCH DAMAGE.

Part 6: Cisco/BUPTNIC copyright notice (BSD)

Copyright (c) 2004, Cisco, Inc and Information Network

Center of Beijing University of Posts and Telecommunications.

All rights reserved.

Redistribution and use in source and binary forms, with or without modification, are permitted provided that the following conditions are met: yy Redistributions of source code must retain the above copyright notice, this list of conditions and the following disclaimer. yy Redistributions in binary form must reproduce the above copyright notice, this list of conditions and the following disclaimer in the documentation and/or other materials provided with the distribution. yy Neither the name of Cisco, Inc, Beijing University of Posts and Telecommunications, nor the names of their contributors may be used to endorse or promote products derived from this software without specific prior written permission.

THIS SOFTWARE IS PROVIDED BY THE COPYRIGHT HOLDERS AND CONTRIBUTORS “AS IS” AND ANY EXPRESS OR IMPLIED WARRANTIES, INCLUDING, BUT NOT LIMITED TO, THE IMPLIED WARRANTIES OF MERCHANTABILITY AND FITNESS FOR A PARTICULAR PURPOSE ARE DISCLAIMED. IN NO EVENT SHALL THE COPYRIGHT HOLDERS OR CONTRIBUTORS BE LIABLE FOR ANY DIRECT, INDIRECT, INCIDENTAL, SPECIAL, EXEMPLARY, OR CONSEQUENTIAL DAMAGES (INCLUDING, BUT NOT LIMITED TO, PROCUREMENT OF SUBSTITUTE GOODS OR SERVICES; LOSS OF USE, DATA, OR PROFITS; OR BUSINESS INTERRUPTION) HOWEVER CAUSED AND ON ANY THEORY OF LIABILITY, WHETHER IN CONTRACT, STRICT LIABILITY, OR TORT (INCLUDING NEGLIGENCE OR OTHERWISE) ARISING IN ANY WAY OUT OF THE USE OF THIS SOFTWARE, EVEN IF ADVISED OF THE POSSIBILITY OF SUCH DAMAGE.

Part 7: Fabasoft R&D Software Software GmbH & Co KG copyright Notice (BSD)

Copyright (c) Fabasoft R&D Software GmbH & Co KG, 2003oss@fabasoft.com

Author: Bernhard Penz

Redistribution and use in source and binary forms, with or without modification, are permitted provided that the following conditions are met: yy Redistributions of source code must retain the above copyright notice, this list of conditions and the following disclaimer. yy Redistributions in binary form must reproduce the above copyright notice, this list of conditions and the following disclaimer in the documentation and/or other materials provided with the distribution. yy The name of Fabasoft R&D Software GmbH & Co KG or any of its subsidiaries, brand or product names may not be used to endorse or promote products derived from this software without specific prior written permission.

THIS SOFTWARE IS PROVIDED BY THE COPYRIGHT HOLDER “AS IS” AND ANY EXPRESS OR IMPLIED WARRANTIES, INCLUDING, BUT NOT LIMITED TO, THE IMPLIED WARRANTIES OF MERCHANTABILITY AND FITNESS FOR A PARTICULAR PURPOSE ARE DISCLAIMED. IN NO EVENT SHALL THE COPYRIGHT HOLDER BE LIABLE FOR ANY DIRECT, INDIRECT, INCIDENTAL, SPECIAL, EXEMPLARY, OR CONSEQUENTIAL DAMAGES (INCLUDING, BUT NOT LIMITED TO, PROCUREMENT OF SUBSTITUTE GOODS OR SERVICES; LOSS OF USE, DATA, OR PROFITS; OR BUSINESS INTERRUPTION) HOWEVER CAUSED AND ON ANY THEORY OF LIABILITY, WHETHER IN CONTRACT, STRICT LIABILITY, OR TORT (INCLUDING NEGLIGENCE OR OTHERWISE) ARISING IN ANY WAY OUT OF THE USE OF THIS SOFTWARE, EVEN IF ADVISED OF THE POSSIBILITY OF SUCH DAMAGE.

Part 8: Apple Inc. copyright notice (BSD)

Copyright (c) 2007 Apple Inc.

All rights reserved.

Redistribution and use in source and binary forms, with or without modification, are permitted provided that the following conditions are met:

1. Redistributions of source code must retain the above copyright notice, this list of conditions and the following disclaimer.

2. Redistributions in binary form must reproduce the above copyright notice, this list of conditions and the following disclaimer in the documentation and/or other materials provided with the distribution. 3. Neither the name of Apple Inc. (“Apple”) nor the names of its contributors may be used to endorse or promote products derived from this software without specific prior written permission.

THIS SOFTWARE IS PROVIDED BY APPLE AND ITS CONTRIBUTORS “AS IS” AND ANY EXPRESS OR IMPLIED WARRANTIES, INCLUDING, BUT NOT LIMITED TO, THE IMPLIED WARRANTIES OF MERCHANTABILITY AND FITNESS FOR A PARTICULAR PURPOSE ARE DISCLAIMED. IN NO EVENT SHALL APPLE OR ITSCONTRIBUTORS BE LIABLE FOR ANY DIRECT, INDIRECT, INCIDENTAL, SPECIAL, EXEMPLARY, OR CONSEQUENTIAL DAMAGES (INCLUDING, BUT NOT LIMITED TO, PROCUREMENT OF SUBSTITUTE GOODS OR SERVICES; LOSS OF USE, DATA, OR PROFITS; OR BUSINESS INTERRUPTION) HOWEVER CAUSED AND ON ANY THEORY OF LIABILITY, WHETHER IN CONTRACT, STRICT LIABILITY, OR TORT (INCLUDING NEGLIGENCE OR OTHERWISE) ARISING IN ANY WAY OUT OF THE USE OF THIS SOFTWARE, EVEN IF ADVISED OF THE POSSIBILITY OF SUCH DAMAGE.

Part 9: ScienceLogic, LLC copyright notice(BSD)

Copyright (c) 2009, ScienceLogic, LLC

All rights reserved.

Redistribution and use in source and binary forms, with or without modification, are permitted provided that the following conditions aremet: yy Redistributions of source code must retain the above copyright notice, this list of conditions and the following disclaimer. yy Redistributions in binary form must reproduce the above copyright notice, this list of conditions and the following disclaimer in the documentation and/or other materials provided with the distribution. yy Neither the name of ScienceLogic, LLC nor the names of its contributors may be used to endorse or promote products derived from this software without specific prior written permission.

THIS SOFTWARE IS PROVIDED BY THE COPYRIGHT HOLDERS AND CONTRIBUTORS “AS IS” AND ANY EXPRESS OR IMPLIED WARRANTIES, INCLUDING, BUT NOT LIMITED TO, THE IMPLIED WARRANTIES OF MERCHANTABILITY AND FITNESS FOR A PARTICULAR PURPOSE ARE DISCLAIMED. IN NO EVENT SHALL THE COPYRIGHT HOLDERS OR CONTRIBUTORS BE LIABLE FOR ANY DIRECT, INDIRECT, INCIDENTAL, SPECIAL, EXEMPLARY, OR CONSEQUENTIAL DAMAGES (INCLUDING, BUT NOT LIMITED TO, PROCUREMENT OF SUBSTITUTE GOODS OR SERVICES; LOSS OF USE, DATA, OR PROFITS; OR BUSINESS INTERRUPTION) HOWEVER CAUSED AND ON ANY THEORY OF LIABILITY, WHETHER IN CONTRACT, STRICT LIABILITY, OR TORT (INCLUDING NEGLIGENCE OR OTHERWISE) ARISING IN ANY WAY OUT OF THE USE OF THIS SOFTWARE, EVEN IF ADVISED OF THE POSSIBILITY OF SUCH DAMAGE

The MIT License

Some software components of this product incorporate source code covered under the MIT license as follows

MIT License 2.0

- Acewidget, bettermeans, jquery-ui, libxml, libxml2, Mesa3D-MesaLib,mwEmbed,OpenGL Samples Pack, Wide Studio, xorg-server, dropbear-2012.55, ncurses-5.7

Copyright (c) 2011, The Dojo Foundation

Copyright 2010, AUTHORS.txt (http://jqueryui.com/about)

Dual licensed under the MIT or GPL Version 2 licenses.

- http://jquery.org/license

- http://docs.jquery.com/UI/Widget

Copyright Daniel Veillard

Copyright Igor Zlatovic <igor@zlatkovic.com>

Copyright Aleksey Sanin

Copyright Gary Pennington <Gary.Pennington@uk.sun.com>

Copyright Alfred Mickautsch <alfred@mickautsch.de>

Copyright Bjorn Reese <bjorn.reese@systematic.dk>

Copyright Joel W. Reed

Copyright William Brack <wbrack@mmm.com.hk>

Copyright (c) 2007-2010 The Khronos Group Inc.

Copyright Atish Kumar Patra

Copyright (c) 2006 Free Software Foundation, Inc.

Permission is hereby granted, free of charge, to any person obtaining a copy of this software and associated documentation files (the "Software"), to deal in the Software without restriction, including without limitation the rights to use, copy, modify, merge, publish, distribute, sublicense, and/or sell copies of the Software, and to permit persons to whom the Software is furnished to do so, subject to the following conditions:

The above copyright notice and this permission notice shall be included in all copies or substantial portions of the Software.

THE SOFTWARE IS PROVIDED "AS IS", WITHOUT WARRANTY OF ANY KIND, EXPRESS OR IMPLIED, INCLUDING BUT NOT LIMITED TO THE WARRANTIES OF MERCHANTABILITY, FITNESS FOR A PARTICULAR PURPOSE AND NONINFRINGEMENT. IN NO EVENT SHALL THE AUTHORS OR COPYRIGHT HOLDERS BE LIABLE FOR ANY CLAIM, DAMAGES OR OTHER LIABILITY, WHETHER IN AN ACTION OF CONTRACT, TORT OR OTHERWISE, ARISING FROM, OUT OF OR IN CONNECTION WITH THE SOFTWARE OR THE USE OR OTHER DEALINGS IN THE SOFTWARE.

Mozilla Public License

Since we, at Hanwha Vision, used the Mozilla Firefox component without modifying the source code according to the MOZILLA Public license 1.1, we are not obliged to provide the source code of the corresponding component.

- Version 1.1

1. Definitions.

1.0.1. "Commercial Use" means distribution or otherwise making the Covered Code available to a third party.

1.1. "Contributor" means each entity that creates or contributes to the creation of Modifications.

1.2. "Contributor Version" means the combination of the Original Code, prior Modifications used by a Contributor, and the Modifications made by that particular Contributor.

1.3. "Covered Code" means the Original Code or Modifications or the combination of the Original Code and Modifications, in each case including portions thereof.

1.4. "Electronic Distribution Mechanism" means a mechanism generally accepted in the software development community for the electronic transfer of data.

1.5. "Executable" means Covered Code in any form other than Source Code.

1.6. "Initial Developer" means the individual or entity identified as the Initial Developer in the Source Code notice required by Exhibit A.

1.7. "Larger Work" means a work which combines Covered Code or portions thereof with code not governed by the terms of this License.

1.8. "License" means this document.

1.8.1. "Licensable" means having the right to grant, to the maximum extent possible, whether at the time of the initial grant or subsequently acquired, any and all of the rights conveyed herein.

1.9. "Modifications" means any addition to or deletion from the substance or structure of either the Original Code or any previous Modifications. When Covered Code is released as a series of files, a Modification is:

A. Any addition to or deletion from the contents of a file containing Original Code or previous Modifications.

B. Any new file that contains any part of the Original Code or previous Modifications.

1.10. "Original Code" means Source Code of computer software code which is described in the Source Code notice required by Exhibit A as Original Code, and which, at the time of its release under this License is not already Covered Code governed by this License.

1.10.1. "Patent Claims" means any patent claim(s), now owned or hereafter acquired, including without limitation, method, process, and apparatus claims, in any patent Licensable by grantor.

1.11. "Source Code" means the preferred form of the Covered Code for making modifications to it, including all modules it contains, plus any associated interface definition files, scripts used to control compilation and installation of an Executable, or source code differential comparisons against either the Original Code or another well known, available Covered Code of the Contributor's choice. The Source Code can be in a compressed or archival form, provided the appropriate decompression or de-archiving software is widely available for no charge.

1.12. "You" (or "Your") means an individual or a legal entity exercising rights under, and complying with all of the terms of, this License or a future version of this License issued under Section 6.1. For legal entities, "You" includes any entity which controls, is controlled by, or is under common control with You. For purposes of this definition, "control" means (a) the power, direct or indirect, to cause the direction or management of such entity, whether by contract or otherwise, or (b) ownership of more than fifty percent (50%) of the outstanding shares or beneficial ownership of such entity.

2. Source Code License.

2.1. The Initial Developer Grant. The Initial Developer hereby grants You a world-wide, royalty-free, non-exclusive license, subject to third party intellectual property claims:

(a) under intellectual property rights (other than patent or trademark) Licensable by Initial Developer to use, reproduce, modify, display, perform, sublicense and distribute the Original Code (or portions thereof) with or without Modifications, and/or as part of a Larger Work; and

(b) under Patents Claims infringed by the making, using or selling of Original Code, to make, have made, use, practice, sell, and offer for sale, and/or otherwise dispose of the Original Code (or portions thereof).

(c) the licenses granted in this Section 2.1(a) and (b) are effective on the date Initial Developer first distributes Original Code under the terms of this License.

(d) Notwithstanding Section 2.1(b) above, no patent license is granted: 1) for code that You delete from the Original Code; 2) separate from the Original Code; or 3) for infringements caused by: i) the modification of the Original Code or ii) the combination of the Original Code with other software or devices.

2.2. Contributor Grant. Subject to third party intellectual property claims, each Contributor hereby grants You a world-wide, royalty-free, non-exclusive license

(a) under intellectual property rights (other than patent or trademark) Licensable by Contributor, to use, reproduce, modify, display, perform, sublicense and distribute the Modifications created by such Contributor (or portions thereof) either on an unmodified basis, with other Modifications, as Covered Code and/or as part of a Larger Work; and

(b) under Patent Claims infringed by the making, using, or selling of Modifications made by that Contributor either alone and/or in combination with its Contributor Version (or portions of such combination), to make, use, sell, offer for sale, have made, and/or otherwise dispose of: 1) Modifications made by that Contributor (or portions thereof); and 2) the combination of Modifications made by that Contributor with its Contributor Version (or portions of such combination).

(c) the licenses granted in Sections 2.2(a) and 2.2(b) are effective on the date Contributor first makes Commercial Use of the Covered Code.

(d) Notwithstanding Section 2.2(b) above, no patent license is granted: 1) for any code that Contributor has deleted from the Contributor Version; 2) separate from the Contributor Version; 3) for infringements caused by: i) third party modifications of Contributor Version or ii) the combination of Modifications made by that Contributor with other software (except as part of the Contributor Version) or other devices; or 4) under Patent Claims infringed by Covered Code in the absence of Modifications made by that Contributor.

3. Distribution Obligations.

3.1. Application of License. The Modifications which You create or to which You contribute are governed by the terms of this License, including without limitation Section 2.2. The Source Code version of Covered Code may be distributed only under the terms of this License or a future version of this License released under Section 6.1, and You must include a copy of this License with every copy of the Source Code You distribute. You may not offer or impose any terms on any Source Code version that alters or restricts the applicable version of this License or the recipients' rights hereunder. However, You may include an additional document offering the additional rights described in Section 3.5.

3.2. Availability of Source Code. Any Modification which You create or to which You contribute must be made available in Source Code form under the terms of this License either on the same media as an Executable version or via an accepted Electronic Distribution Mechanism to anyone to whom you made an Executable version available; and if made available via Electronic Distribution Mechanism, must remain available for at least twelve (12) months after the date it initially became available, or at least six (6) months after a subsequent version of that particular Modification has been made available to such recipients. You are responsible for ensuring that the Source Code version remains available even if the Electronic Distribution Mechanism is maintained by a third party.

3.3. Description of Modifications. You must cause all Covered Code to which You contribute to contain a file documenting the changes You made to create that Covered Code and the date of any change. You must include a prominent statement that the Modification is derived, directly or indirectly, from Original Code provided by the Initial Developer and including the name of the Initial Developer in (a) the Source Code, and (b) in any notice in an Executable version or related documentation in which You describe the origin or ownership of the Covered Code.

3.4. Intellectual Property Matters

(a) Third Party Claims. If Contributor has knowledge that a license under a third party's intellectual property rights is required to exercise the rights granted by such Contributor under Sections 2.1 or 2.2, Contributor must include a text file with the Source Code distribution titled "LEGAL" which describes the claim and the party making the claim in sufficient detail that a recipient will know whom to contact. If Contributor obtains such knowledge after the Modification is made available as described in Section 3.2, Contributor shall promptly modify the LEGAL file in all copies Contributor makes available thereafter and shall take other steps (such as notifying appropriate mailing lists or newsgroups) reasonably calculated to inform those who received the Covered Code that new knowledge has been obtained.

(b) Contributor APIs. If Contributor's Modifications include an application programming interface and Contributor has knowledge of patent licenses which are reasonably necessary to implement that API, Contributor must also include this information in the LEGAL file.

(c) Representations.

Contributor represents that, except as disclosed pursuant to Section 3.4(a) above, Contributor believes that Contributor's Modifications are Contributor's original creation(s) and/or Contributor has sufficient rights to grant the rights conveyed by this License.

3.5. Required Notices. You must duplicate the notice in Exhibit A in each file of the Source Code. If it is not possible to put such notice in a particular Source Code file due to its structure, then You must include such notice in a location (such as a relevant directory) where a user would be likely to look for such a notice. If You created one or more Modification(s) You may add your name as a Contributor to the notice described in Exhibit A. You must also duplicate this License in any documentation for the Source Code where You describe recipients' rights or ownership rights relating to Covered Code. You may choose to offer, and to charge a fee for, warranty, support, indemnity or liability obligations to one or more recipients of Covered Code. However, You may do so only on Your own behalf, and not on behalf of the Initial Developer or any Contributor. You must make it absolutely clear than any such warranty, support, indemnity or liability obligation is offered by You alone, and You hereby agree to indemnify the Initial Developer and every Contributor for any liability incurred by the Initial Developer or such Contributor as a result of warranty, support, indemnity or liability terms You offer.

3.6. Distribution of Executable Versions. You may distribute Covered Code in Executable form only if the requirements of Section 3.1-3.5 have been met for that Covered Code, and if You include a notice stating that the Source Code version of the Covered Code is available under the terms of this License, including a description of how and where You have fulfilled the obligations of Section 3.2. The notice must be conspicuously included in any notice in an Executable version, related documentation or collateral in which You describe recipients' rights relating to the Covered Code. You may distribute the Executable version of Covered Code or ownership rights under a license of Your choice, which may contain terms different from this License, provided that You are in compliance with the terms of this License and that the license for the Executable version does not attempt to limit or alter the recipient's rights in the Source Code version from the rights set forth in this License. If You distribute the Executable version under a different license You must make it absolutely clear that any terms which differ from this License are offered by You alone, not by the Initial Developer or any Contributor. You hereby agree to indemnify the Initial Developer and every Contributor for any liability incurred by the Initial Developer or such Contributor as a result of any such terms You offer.

3.7. Larger Works. You may create a Larger Work by combining Covered Code with other code not governed by the terms of this License and distribute the Larger Work as a single product. In such a case, You must make sure the requirements of this License are fulfilled for the Covered Code.

4. Inability to Comply Due to Statute or Regulation.

If it is impossible for You to comply with any of the terms of this License with respect to some or all of the Covered Code due to statute, judicial order, or regulation then You must: (a) comply with the terms of this License to the maximum extent possible; and (b) describe the limitations and the code they affect. Such description must be included in the LEGAL file described in Section 3.4 and must be included with all distributions of the Source Code. Except to the extent prohibited by statute or regulation, such description must be sufficiently detailed for a recipient of ordinary skill to be able to understand it.

5. Application of this License.

This License applies to code to which the Initial Developer has attached the notice in Exhibit A and to related Covered Code.

6. Versions of the License.

6.1. New Versions. Netscape Communications Corporation (''Netscape") may publish revised and/or new versions of the License from time to time. Each version will be given a distinguishing version number.

6.2. Effect of New Versions. Once Covered Code has been published under a particular version of the License, You may always continue to use it under the terms of that version. You may also choose to use such Covered Code under the terms of any subsequent version of the License published by Netscape. No one other than Netscape has the right to modify the terms applicable to Covered Code created under this License.

6.3. Derivative Works. If You create or use a modified version of this License (which you may only do in order to apply it to code which is not already Covered Code governed by this License), You must (a) rename Your license so that the phrases "Mozilla", "MOZILLAPL", "MOZPL", "Netscape", "MPL", "NPL" or any confusingly similar phrase do not appear in your license (except to note that your license differs from this License) and (b) otherwise make it clear that Your version of the license contains terms which differ from the Mozilla Public License and Netscape Public License. (Filling in the name of the Initial Developer, Original Code or Contributor in the notice described in Exhibit A shall not of themselves be deemed to be modifications of this License.)

7. DISCLAIMER OF WARRANTY.

COVERED CODE IS PROVIDED UNDER THIS LICENSE ON AN "AS IS" BASIS, WITHOUT WARRANTY OF ANY KIND, EITHER EXPRESSED OR IMPLIED, INCLUDING, WITHOUT LIMITATION, WARRANTIES THAT THE COVERED CODE IS FREE OF DEFECTS, MERCHANTABLE, FIT FOR A PARTICULAR PURPOSE OR NON-INFRINGING. THE ENTIRE RISK AS TO THE QUALITY AND PERFORMANCE OF THE COVERED CODE IS WITH YOU. SHOULD ANY COVERED CODE PROVE DEFECTIVE IN ANY RESPECT, YOU (NOT THE INITIAL DEVELOPER OR ANY OTHER CONTRIBUTOR) ASSUME THE COST OF ANY NECESSARY SERVICING, REPAIR OR CORRECTION. THIS DISCLAIMER OF WARRANTY CONSTITUTES AN ESSENTIAL PART OF THIS LICENSE. NO USE OF ANY COVERED CODE IS AUTHORIZED HEREUNDER EXCEPT UNDER THIS DISCLAIMER.

8. TERMINATION.

8.1. This License and the rights granted hereunder will terminate automatically if You fail to comply with terms herein and fail to cure such breach within 30 days of becoming aware of the breach. All sublicenses to the Covered Code which are properly granted shall survive any termination of this License. Provisions which, by their nature, must remain in effect beyond the termination of this License shall survive.

8.2. If You initiate litigation by asserting a patent infringement claim (excluding declatory judgment actions) against Initial Developer or a Contributor (the Initial Developer or Contributor against whom You file such action is referred to as "Participant") alleging that:

(a) such Participant's Contributor Version directly or indirectly infringes any patent, then any and all rights granted by such Participant to You under Sections 2.1 and/or 2.2 of this License shall, upon 60 days notice from Participant terminate prospectively, unless if within 60 days after receipt of notice You either: (i) agree in writing to pay Participant a mutually agreeable reasonable royalty for Your past and future use of Modifications made by such Participant, or (ii) withdraw Your litigation claim with respect to the Contributor Version against such Participant. If within 60 days of notice, a reasonable royalty and payment arrangement are not mutually agreed upon in writing by the parties or the litigation claim is not withdrawn, the rights granted by Participant to You under Sections 2.1 and/or 2.2 automatically terminate at the expiration of the 60 day notice period specified above.

(b) any software, hardware, or device, other than such Participant's Contributor Version, directly or indirectly infringes any patent, then any rights granted to You by such Participant under Sections 2.1(b) and 2.2(b) are revoked effective as of the date You first made, used, sold, distributed, or had made, Modifications made by that Participant.

8.3. If You assert a patent infringement claim against Participant alleging that such Participant's Contributor Version directly or indirectly infringes any patent where such claim is resolved (such as by license or settlement) prior to the initiation of patent infringement litigation, then the reasonable value of the licenses granted by such Participant under Sections 2.1 or 2.2 shall be taken into account in determining the amount or value of any payment or license.

8.4. In the event of termination under Sections 8.1 or 8.2 above, all end user license agreements (excluding distributors and resellers) which have been validly granted by You or any distributor hereunder prior to termination shall survive termination.

9. LIMITATION OF LIABILITY.

UNDER NO CIRCUMSTANCES AND UNDER NO LEGAL THEORY, WHETHER TORT (INCLUDING NEGLIGENCE), CONTRACT, OR OTHERWISE, SHALL YOU, THE INITIAL DEVELOPER, ANY OTHER CONTRIBUTOR, OR ANY DISTRIBUTOR OF COVERED CODE, OR ANY SUPPLIER OF ANY OF SUCH PARTIES, BE LIABLE TO ANY PERSON FOR ANY INDIRECT, SPECIAL, INCIDENTAL, OR CONSEQUENTIAL DAMAGES OF ANY CHARACTER INCLUDING, WITHOUT LIMITATION, DAMAGES FOR LOSS OF GOODWILL, WORK STOPPAGE, COMPUTER FAILURE OR MALFUNCTION, OR ANY AND ALL OTHER COMMERCIAL DAMAGES OR LOSSES, EVEN IF SUCH PARTY SHALL HAVE BEEN INFORMED OF THE POSSIBILITY OF SUCH DAMAGES. THIS LIMITATION OF LIABILITY SHALL NOT APPLY TO LIABILITY FOR DEATH OR PERSONAL INJURY RESULTING FROM SUCH PARTY'S NEGLIGENCE TO THE EXTENT APPLICABLE LAW PROHIBITS SUCH LIMITATION. SOME JURISDICTIONS DO NOT ALLOW THE EXCLUSION OR LIMITATION OF INCIDENTAL OR CONSEQUENTIAL DAMAGES, SO THIS EXCLUSION AND LIMITATION MAY NOT APPLY TO YOU. 10. U.S. GOVERNMENT END USERS.

The Covered Code is a "commercial item," as that term is defined in 48 C.F.R. 2.101 (Oct. 1995), consisting of "commercial computer software" and "commercial computer software documentation," as such terms are used in 48 C.F.R. 12.212 (Sept. 1995). Consistent with 48 C.F.R. 12.212 and 48 C.F.R. 227.7202-1 through 227.7202-4 (June 1995), all U.S. Government End Users acquire Covered Code with only those rights set forth herein.

11. MISCELLANEOUS.

This License represents the complete agreement concerning subject matter hereof. If any provision of this License is held to be unenforceable, such provision shall be reformed only to the extent necessary to make it enforceable. This License shall be governed by California law provisions (except to the extent applicable law, if any, provides otherwise), excluding its conflictof-law provisions. With respect to disputes in which at least one party is a citizen of, or an entity chartered or registered to do business in the United States of America, any litigation relating to this License shall be subject to the jurisdiction of the Federal Courts of the Northern District of California, with venue lying in Santa Clara County, California, with the losing party responsible for costs, including without limitation, court costs and reasonable attorneys' fees and expenses. The application of the United Nations Convention on Contracts for the International Sale of Goods is expressly excluded. Any law or regulation which

provides that the language of a contract shall be construed against the drafter shall not apply to this License.

12. RESPONSIBILITY FOR CLAIMS.

As between Initial Developer and the Contributors, each party is responsible for claims and damages arising, directly or indirectly, out of its utilization of rights under this License and You agree to work with Initial Developer and Contributors to distribute such responsibility on an equitable basis. Nothing herein is intended or shall be deemed to constitute any admission of liability.

13. MULTIPLE-LICENSED CODE.

Initial Developer may designate portions of the Covered Code as Multiple-Licensed. Multiple-Licensedmeans that the Initial Developer permits you to utilize portions of the Covered Code under Your choice of the MPL or the alternative licenses, if any, specified by the Initial Developer in the file described in Exhibit A.

EXHIBIT A -Mozilla Public License.

The contents of this file are subject to the Mozilla Public License Version 1.1 (the "License"); you may not use this file except in compliance with the License. You may obtain a copy of the License at http://www.mozilla.org/MPL/Software distributed under the License is distributed on an "AS IS" basis, WITHOUT WARRANTY OF ANY KIND, either express or implied. See the License for the specific language governing rights and limitations under the License.

The Original Code is _____.

The Initial Developer of the Original Code is _____. Portions created by _____ are Copyright (C) _____ _____. All Rights Reserved.

Contributor(s): _____.

Alternatively, the contents of this file may be used under the terms of the _____ license (the [___] License), in which case the provisions of [_____] License are applicable instead of those above. If you wish to allow use of your version of this file only under the terms of the [____] License and not to allow others to use your version of this file under the MPL, indicate your decision by deleting the provisions above and replace them with the notice and other provisions required by the [___] License. If you do not delete the provisions above, a recipient may use your version of this file under either the MPL or the [___] License."

[NOTE: The text of this Exhibit A may differ slightly from the text of the notices in the Source Code files of the Original Code. You should use the text of this Exhibit A rather than the text found in the Original Code Source Code for Your Modifications

The Independent JPEG Group's JPEG Software

The software included in this product contains copyrighted software that is licensed under the JPEG license.

- JPEG license
  - Code project . Generating Outline OpenGL, Libjpeg

This distribution contains the sixth public release of the Independent JPEG Group's free JPEG software. You are welcome to redistribute this software and to use it for any purpose, subject to the conditions under LEGAL ISSUES, below.

Serious users of this software (particularly those incorporating it into larger programs) should contact IJG at jpeg-info@uunet.uu.net to be added to our electronic mailing list. Mailing list members are notified of updates and have a chance to participate in technical discussions, etc.

This software is the work of Tom Lane, Philip Gladstone, Jim Boucher, Lee Crocker, Julian Minguillon, Luis Ortiz, George Phillips, Davide Rossi, Guido Vollbeding, Ge' Weijers, and other members of the Independent JPEG Group.

IJG is not affiliated with the official ISO JPEG standards committee.

LEGAL ISSUES

==========

In plain English:

1. We don't promise that this software works. (But if you find any bugs, please let us know!)

2. You can use this software for whatever you want. You don't have to pay us.

3. You may not pretend that you wrote this software. If you use it in a program, you must acknowledge somewhere in your documentation that you've used the IJG code.

In legalese:

The authors make NO WARRANTY or representation, either express or implied, with respect to this software, its quality, accuracy, merchantability, or fitness for a particular purpose. This software is provided "AS IS", and you, its user, assume the entire risk as to its quality and accuracy.

This software is copyright (C) 1991-1998, Thomas G. Lane. All Rights Reserved except as specified below.

Permission is hereby granted to use, copy, modify, and distribute this software (or portions thereof) for any purpose, without fee, subject to these conditions:

(1) If any part of the source code for this software is distributed, then this README file must be included, with this copyright and no-warranty notice unaltered; and any additions, deletions, or changes to the original files must be clearly indicated in accompanying documentation.

(2) If only executable code is distributed, then the accompanying documentation must state that "this software is based in part on the work of the Independent JPEG Group".

(3) Permission for use of this software is granted only if the user accepts full responsibility for any undesirable consequences; the authors accept NO LIABILITY for damages of any kind.

These conditions apply to any software derived from or based on the IJG code, not just to the unmodified library. If you use our work, you ought to acknowledge us.

Permission is NOT granted for the use of any IJG author's name or company name in advertising or publicity relating to this software or products derived from it. This software may be referred to only as "the Independent JPEG Group's software".

We specifically permit and encourage the use of this software as the basis of commercial products, provided that all warranty or liability claims are assumed by the product vendor.

ansi2knr.c is included in this distribution by permission of L. Peter Deutsch, sole proprietor of its copyright holder, Aladdin Enterprises of Menlo Park, CA.

ansi2knr.c is NOT covered by the above copyright and conditions, but instead by the usual distribution terms of the Free Software Foundation; principally, that you must include source code if you redistribute it. (See the file ansi2knr.c for full details.) However, since ansi2knr. c is not needed as part of any program generated from the IJG code, this does not limit you more than the foregoing paragraphs do.

The Unix configuration script "configure" was produced with GNU Autoconf. It is copyright by the Free Software Foundation but is freely distributable. The same holds for its supporting scripts (config.guess, config.sub, ltconfig, ltmain. sh). Another support script, install-sh, is copyright by M.I.T. but is also freely distributable.

It appears that the arithmetic coding option of the JPEG spec is covered by patents owned by IBM, AT&T, and Mitsubishi. Hence arithmetic coding cannot legally be used without obtaining one or more licenses. For this reason, support for arithmetic coding has been removed from the free JPEG software. (Since arithmetic coding provides only a marginal gain over the unpatented Huffman mode, it is unlikely that very many implementations will support it.) So far as we are aware, there are no patent restrictions on the remaining code.

The IJG distribution formerly included code to read and write GIF files. To avoid entanglement with the Unisys LZW patent, GIF reading support has been removed altogether, and the GIF writer has been simplified to produce "uncompressed GIFs". This technique does not use the LZW algorithm; the resulting GIF files are larger than usual, but are readable by all standard GIF decoders.

We are required to state that

"The Graphics Interchange Format(c) is the Copyright property of CompuServe Incorporated. GIF(sm) is a Service Mark property of CompuServe Incorporated."

T-Kernel License

- This Product uses the Source Code of T-Kernel under T-License granted by the T-Engine Forum(www.t-engine.org)

T-License [License Agreement for Source Code of T-Kernel]

established by T-Engine Forum
on January 23, 2004
revised on June 17, 2004
revised on December 21, 2006
revised on March 24, 2009

Article 1. Scope of License Agreement

1. This License Agreement sets forth copyrights and the terms and conditions of use applicable to the source code of T-Kernel distributed by T-Engine Forum and any derivative work created therefrom.

Article 2. Definition

1. "T-Kernel" means a real-time operating system controlled and distributed by T-Engine Forum on behalf of the copyright holder thereof.

2. "Source Code" means a source program, including related comments and documentations, for the T-Kernel and the Ported Source Code defined in Article 2.8 which is registered with T-Engine Forum.

3. "Hardware-dependent Part" means the part of the Source Code which depends on hardware and needs to be changed when the Source Code is ported and operated on the target hardware, and is designated and separated as such part.

4. "Compiler-dependent Part" means the part of the Source Code which depends on compiler and needs to be changed when the Source Code is ported and operated on the target hardware, and is designated and separated as such part.

5. "Header File" means the part of the Source Code which contains definitions necessary to develop application programs.

6. "T-Engine Hardware" means the hardware which is manufactured in accordance with the T-Engine Hardware specifications or the μT-Engine Hardware specifications issued by T-Engine Forum, and registered with T-Engine Forum.

7. "Similar Hardware to T-Engine Hardware" means any hardware (including software which emulates hardware) other than that defined in Article 2.6 above, on which the T-Kernel can be operated.

8. "Ported Source Code" means a source program produced from the Source Code by modifying only its Hardwaredependent Part and/or Compiler-dependent Part to enable it to be operated on the T-Engine Hardware or the Similar Hardware to T-Engine Hardware. The Ported Source Code which is registered with T-Engine Forum shall be included in the Source Code.

9. "Modified Source Code" means a source program modified from the Source Code for the purpose of improving its performance, increasing or decreasing its function, and the like. The Ported Source Code shall not be included in the Modified Source Code.

10. "Binary Code" means an executable code form which is created by compiling programs, which include all or part of the Source Code or the Modified Source Code.

11. "Derivative Work" means the Modified Source Code or the Binary Code.

12. "Embedded Product" means any product which operates with executable code form of the Source Code, the Modified Source Code or the Binary Code loaded on its hardware.

13. "End User" means a consumer who uses the Embedded Product.

14. "System Developer" means any person who develops the Embedded Product by itself or has a third party develop the same, and provides, whether with or without payment, the End User with the Embedded Product.

15. "Distributor of Modification" means any person who produces the Modified Source Code and, whether with or without payment, distributes the same to any third party.

16. "Patch for Modification" means a difference, program, system, or the like in order to create the Modified Source Code from the Source Code or the Binary Code thereof.

17. "Vicarious Execution of Patch Processing" means vicarious execution service to create the Modified Source Code applying the Patch for Modification to the Source Code or the Binary Code thereof.

18. "Source Code User" means a person who uses the Source Code.

19. "Distribution" means any of the following acts:

1. to transmit a work to a large number of specific persons through the Internet communication, broadcasting, and the like;

2. to transmit a work to the general public through the Internet communication, broadcasting, and the like automatically in response to a request from the public; and

3. to distribute a copy of a work to the general public or a large number of specific persons.

Article 3. Copyright

1. The copyrights of the Source Code shall be owned by Ken Sakamura.

Article 4. License of Source Code

1. As provided for in this Article, T-Engine Forum shall provide, and grant a license to use, the Source Code free of charge to any person who has taken the necessary procedure for registration as prescribed by T-Engine Forum and agreed to the T-License.

2. The Source Code shall be distributed exclusively by T-Engine Forum. Any person who obtains the Source Code under Article 4.1 above shall not make any re-Distribution of the Source Code.

3. In accordance with the license granted under Article 4.1 above, the Source Code User may perform the following acts:

1. to copy and/or modify the Source Code provided by T-Engine Forum hereunder for its own research, development and the like.

2. to run the Source Code provided by T-Engine Forum hereunder for its own research, development and the like.

3. to run the Source Code modified in accordance with the provision of Article 4.3 (1) above for its own research, development and the like.

4. to distribute the Binary Code created from the Source Code provided by T-Engine Forum hereunder or from the Source Code modified in accordance with the provision of Article 4.3 (1) above.

4. In accordance with the license granted under Article 4.1 above, the System Developer may perform the following acts:

1. to perform any and all acts set forth in the Article 4.3 above.

2. to develop and manufacture the Embedded Product containing the Binary Code, and, whether with or without payment, provide the End User with the same and make the Binary Code available to the End User on the Embedded Product.

5. The Source Code User and the System Developer shall be obligated to give a notice that the Source Code is used, in such a way as separately specified by T-Engine Forum, when they use the Source Code or the Binary Code, or make the Binary Code available for the End User on the Embedded Product.

Article 5. Distribution of Modified Source Code

1. Any of A- members of T-Engine Forum may become the Distributor of Modification by obtaining the approval of T-Engine Forum through the registration procedure as prescribed by the Forum provided that only the department of the A- member which has taken the registration procedure may distribute the Modified Source Code in such a way as provided for in this Article as long as it holds the Amembership.

2. The Distributor of Modification may create the Modified Source Code based on the Source Code provided by T-Engine Forum and the Patch for Modification to be applied to create such Modified Source Code from the Source Code.

3. The Distributor of Modification shall, prior to the distribution, inform T-Engine Forum of and register a name and description of the Modified Source Code in such a way as specified by T-Engine Forum.

4. The Distributor of Modification shall determine the name of the Modified Source Code subject to the rules separately established by T-Engine Forum and publish an appropriate notice as required by the rules on the Patch for Modification and the Modified Source Code.

5. The Distributor of Modification may distribute the Modified Source Code to a third party, whether with or without payment, provided that the Distributor of Modification shall take the necessary measures to prohibit the third party from making the re-Distribution of the Modified Source Code.

6. Developer with the Patch for Modification. Provided, however, that the Distributor of Modification shall be obligated to confirm that the System Developer is the Source Code User duly licensed under Article 4.1.

7. The Distributor of Modification may perform the Vicarious Execution of Patch Processing for the System Developer.

8. The System Developer shall not distribute the Modified Source Code in further modified form to any third party as a stand-alone software product.

9. The System Developer may, under the same obligation as imposed in Article 4.5, make the Embedded Product available for the End User through use of the Patch for Modification distributed by the Distributor of Modification or the Derivative Works obtained through the Vicarious Execution of Patch Processing.

Article 6. Distribution and Registration of the Ported Source Code

1. The Source Code User and the System Developer may, whether with or without charge, distribute to any third party only the following parts of the Ported Source Code on the T-Engine Hardware or the Similar Hardware to T-Engine Hardware:

1. The Hardware-dependent Part and/or Compiler-dependent Part; provided that the Source Code User and the System Developer shall inform T-Engine Forum of, and T-Engine Forum may publish, a method for distributing said Part(s) to third parties.

2. The Header File; provided that the Header File shall be distributed together with the Binary Code of the Ported Source Code.

2. Any member of T-Engine Forum may request T-Engine Forum to register and distribute, as an original source code for T-Kernel, the Ported Source Code on the T-Engine Hardware or the Similar Hardware to T-Engine Hardware.

3. Any member of T-Engine Forum who requests the distribution mentioned in the preceding paragraph shall accede to the following conditions:

1. The member shall confirm that the object hardware is the T-Engine Hardware or the Similar Hardware to T-Engine Hardware.

2. The member shall provide T-Engine Forum with a complete set of operational environment for the object hardware and T-Kernel free of charge when requesting the distribution.

3. The member shall submit test results of the Ported Source Code to T-Engine Forum when requesting the distribution.

4. In the event that T-Engine Forum accepts the request mentioned in Article 6.2, T-Engine Forum shall register and distribute the Ported Source Code as the Source Code for T-Kernel. Provided, however, that the Ported Source Code may be treated in the same way as the Modified Source Code until the time of registration hereunder.

5. The provision set forth in Article 3 shall apply to the Ported Source Code registered in accordance with this Article.

Article 7. Use for Other Purpose

1. Any use of the Source Code, the Modified Source Code or the Ported Source Code other than those stipulated in Articles 4, 5 and 6 shall be subject to the prior approval of T-Engine Forum.

Article 8. Limited Warranty

1. T-Engine Forum and the copyright holder of the Source Code warrant that the Source Code does not infringe third party's copyrights. Provided, however, that T-Engine Forum and the copyright holder of the Source Code make no warranty as to the Hardware-dependent Part and/or Compiler- dependent Part set forth in Article 6.2 in the Ported Source Code by any third party.

2. Neither T-Engine Forum nor the copyright holder of the Source Code warrants that the Source Code will fit for any particular purpose of the Source Code User.

3. Neither T-Engine Forum nor the copyright holder of the Source Code warrants that the Source Code does not infringe any third party's industrial property rights. In no event shall T-Engine Forum and the copyright holder of the Source Code be liable for any dispute which may arise between the Source Code User and a third party in connection with the third party's industrial property rights.

Article 9. Indemnity

1. Neither T-Engine Forum nor the copyright holder of the Source Code shall be liable for any damages (including, but not limited to, damages resulting from loss of profit, business interruption, loss of business information or any other pecuniary damage) arising out of use or impossibility of use of the Source Code, even if T-Engine Forum and the copyright holder have been informed of the possibility of such damages.

Article 10. Breach of Agreement

1. In case that T-Engine Forum considers that this License Agreement is breached or that the popularization of T-Kernel is obstructed, T-Engine Forum shall take measures to correct such breach or such obstruction, take measures on the ground of copyright infringement, or take any other necessary measures against the breaching person or the obstructing person, regardless of whether or not the said person is a member of T-Engine Forum.

2. In case of breach of this License Agreement by a member of T-Engine Forum, T-Engine Forum may take appropriate measures against the member; for example, the member is disqualified from membership, depending on what kind of breach has been committed by it.

3. Any legal dispute which may arise in relation to any breach of this License Agreement shall be subject to the exclusive jurisdiction of the Tokyo District Court.

Article 11. Governing Law and Language

1. This License Agreement shall be governed by and interpreted under the laws of Japan.

2. This License Agreement is executed in both Japanese text and English text provided that the Japanese text shall govern the interpretation and performance of this License Agreement.

Apache License 2.0

Component	Name License	URL
mDNSResponder_bonjour	Apache License 2.0	http://www.apache.org/licenses/LICENSE-2.0

TERMS AND CONDITIONS FOR USE, REPRODUCTION, AND DISTRIBUTION

1. Definitions.

"License" shall mean the terms and conditions for use, reproduction, and distribution as defined by Sections 1 through 9 of this document.

"Licensor" shall mean the copyright owner or entity authorized by the copyright owner that is granting the License.

"Legal Entity" shall mean the union of the acting entity and all other entities that control, are controlled by, or are under common control with that entity. For the purposes of this definition, "control" means (i) the power, direct or indirect, to cause the direction or management of such entity, whether by contract or otherwise, or (ii) ownership of fifty percent (50%) or more of the outstanding shares, or (iii) beneficial ownership of such entity.

"You" (or "Your") shall mean an individual or Legal Entity exercising permissions granted by this License. "Source" form shall mean the preferred form for making modifications, including but not limited to software source code, documentation source, and configuration files.

"Object" form shall mean any form resulting from mechanical transformation or translation of a Source form, including but not limited to compiled object code, generated documentation, and conversions to other media types.

"Work" shall mean the work of authorship, whether in Source or Object form, made available under the License, as indicated by a copyright notice that is included in or attached to the work (an example is provided in the Appendix below).

"Derivative Works" shall mean any work, whether in Source or Object form, that is based on (or derived from) the Work and for which the editorial revisions, annotations, elaborations, or other modifications represent, as a whole, an original work of authorship. For the purposes of this License, Derivative Works shall not include works that remain separable from, or merely link (or bind by name) to the interfaces of, the Work and Derivative Works thereof.

"Contribution" shall mean any work of authorship, including the original version of the Work and any modifications or additions to that Work or Derivative Works thereof, that is intentionally submitted to Licensor for inclusion in the Work by the copyright owner or by an individual or Legal Entity authorized to submit on behalf of the copyright owner. For the purposes of this definition, "submitted" means any form of electronic, verbal, or written communication sent to the Licensor or its representatives, including but not limited to communication on electronic mailing lists, source code control systems, and issue tracking systems that are managed by, or on behalf of, the Licensor for the purpose of discussing and improving the Work, but excluding communication that is conspicuously marked or otherwise designated in writing by the copyright owner as "Not a Contribution." "Contributor" shall mean Licensor and any individual or Legal Entity on behalf of whom a Contribution has been received by Licensor and subsequently incorporated within the Work.

2. Grant of Copyright License. Subject to the terms and conditions of this License, each Contributor hereby grants to You a perpetual, worldwide, non-exclusive, no-charge, royalty-free, irrevocable copyright license to reproduce, prepare Derivative Works of, publicly display, publicly perform, sublicense, and distribute the Work and such Derivative Works in Source or Object form.
3. Grant of Patent License. Subject to the terms and conditions of this License, each Contributor hereby grants to You a perpetual, worldwide, non-exclusive, no-charge, royaltyfree, irrevocable (except as stated in this section) patent license to make, have made, use, offer to sell, sell, import, and otherwise transfer the Work, where such license applies only to those patent claims licensable by such Contributor that are necessarily infringed by their Contribution(s) alone or by combination of their Contribution(s) with the Work to which such Contribution(s) was submitted. If You institute patent litigation against any entity (including a crossclaim or counterclaim in a lawsuit) alleging that the Work or a Contribution incorporated within the Work constitutes direct or contributory patent infringement, then any patent licenses granted to You under this License for that Work shall terminate as of the date such litigation is filed.
4. Redistribution. You may reproduce and distribute copies of the Work or Derivative Works thereof in any medium, with or without modifications, and in Source or Object form, provided that You meet the following conditions:
   (a) You must give any other recipients of the Work or Derivative Works a copy of this License; and
   (b) You must cause any modified files to carry prominent notices stating that You changed the files; and
   (c) You must retain, in the Source form of any Derivative Works that You distribute, all copyright, patent, trademark, and attribution notices from the Source form of the Work, excluding those notices that do not pertain to any part of the Derivative Works; and
   (d) If the Work includes a "NOTICE" text file as part of its distribution, then any Derivative Works that You distribute must include a readable copy of the attribution notices contained within such NOTICE file, excluding those notices that do not pertain to any part of the Derivative Works, in at least one of the following places: within a NOTICE text file distributed as part of the Derivative Works; within the Source form or documentation, if provided along with the Derivative Works; or, within a display generated by the Derivative Works, if and wherever such third-party notices normally appear. The contents of the NOTICE file are for informational purposes only and do not modify the License. You may add Your own attribution notices within Derivative Works that You distribute, alongside or as an addendum to the NOTICE text from the Work, provided that such additional attribution notices cannot be construed as modifying the License.

You may add Your own copyright statement to Your modifications and may provide additional or different license terms and conditions for use, reproduction, or distribution of Your modifications, or for any such Derivative Works as a whole, provided Your use, reproduction, and distribution of the Work otherwise complies with the conditions stated in this License.

5. Submission of Contributions. Unless You explicitly state otherwise, any Contribution intentionally submitted for inclusion in the Work by You to the Licensor shall be under the terms and conditions of this License, without any additional terms or conditions. Notwithstanding the above, nothing herein shall supersede or modify the terms of any separate license agreement you may have executed with Licensor regarding such Contributions.
6. Trademarks. This License does not grant permission to use the trade names, trademarks, service marks, or product names of the Licensor, except as required for reasonable and customary use in describing the origin of the Work and reproducing the content of the NOTICE file.
7. Disclaimer of Warranty. Unless required by applicable law or agreed to in writing, Licensor provides the Work (and eachContributor provides its Contributions) on an "AS IS" BASIS, WITHOUT WARRANTIES OR CONDITIONS OF ANY KIND, either express or implied, including, without limitation, any warranties or conditions of TITLE, NONINFRINGEMENT, MERCHANTABILITY, or FITNESS FOR A PARTICULAR PURPOSE. You are solely responsible for determining the appropriateness of using or redistributing the Work and assume any risks associated with Your exercise of permissions under this License.
8. Limitation of Liability. In no event and under no legal theory, whether in tort (including negligence), contract, or otherwise, unless required by applicable law (such as deliberate and grossly negligent acts) or agreed to in writing, shall any Contributor be liable to You for damages, including any direct, indirect, special, incidental, or consequential damages of any character arising as a result of this License or out of the use or inability to use the Work (including but not limited to damages for loss of goodwill, work stoppage, computer failure or malfunction, or any and all other commercial damages or losses), even if such Contributor has been advised of the possibility of such damages.
9. Accepting Warranty or Additional Liability. While redistributing the Work or Derivative Works thereof, You may choose to offer, and charge a fee for, acceptance of support, warranty, indemnity, or other liability obligations and/or rights consistent with this License. However, in accepting such obligations, You may act only on Your own behalf and on Your sole responsibility, not on behalf of any other Contributor, and only if You agree to indemnify, defend, and hold each Contributor harmless for any liability incurred by, or claims asserted against, such Contributor by reason of your accepting any such warranty or additional liability.

END OF TERMS AND CONDITIONS

APPENDIX: How to apply the Apache License to your work.

To apply the Apache License to your work, attach the following boilerplate notice, with the fields enclosed by brackets "[]" replaced with your own identifying information. (Don't include the brackets!) The text should be enclosed in the appropriate comment syntax for the file format. We also recommend that a file or class name and description of purpose be included on the same "printed page" as the copyright notice for easier identification within third-party archives.

Copyright [yyyy] [name of copyright owner]

Licensed under the Apache License, Version 2.0 (the "License"); you may not use this file except in compliance with the License. You may obtain a copy of the License at http://www.apache.org/licenses/LICENSE-2.0

Unless required by applicable law or agreed to in writing, software distributed under the License is distributed on an "AS IS" BASIS, WITHOUT WARRANTIES OR CONDITIONS OF ANY KIND, either express or implied. See the License for the specific language governing permissions and limitations under the License.

BZip2 License

This program, "bzip2", the associated library "libbzip2", and all documentation, are copyright (C) 1996-2007 Julian R Seward. All rights reserved.

Component Name	License	URL
bzip2-1.0.6	Bzip2	http://www.bzip.org/

Redistribution and use in source and binary forms, with or without modification, are permitted provided that the following conditions are met:

1. Redistributions of source code must retain the above copyright notice, this list of conditions and the following disclaimer.
2. The origin of this software must not be misrepresented; you must not claim that you wrote the original software. If you use this software in a product, an acknowledgment in the product documentation would be appreciated but is not required.
3. Altered source versions must be plainly marked as such, and must not be misrepresented as being the original software.
4. The name of the author may not be used to endorse or promote products derived from this software without specific prior written permission.

THIS SOFTWARE IS PROVIDED BY THE AUTHOR ``AS IS'' AND ANY EXPRESS OR IMPLIED WARRANTIES, INCLUDING, BUT NOT LIMITED TO, THE IMPLIED WARRANTIES OF MERCHANTABILITY AND FITNESS FOR A PARTICULAR PURPOSE ARE DISCLAIMED. IN NO EVENT SHALL THE AUTHOR BE LIABLE FOR ANY DIRECT, INDIRECT, INCIDENTAL, SPECIAL, EXEMPLARY, OR CONSEQUENTIAL DAMAGES (INCLUDING, BUT NOT LIMITED TO, PROCUREMENT OF SUBSTITUTE GOODS OR SERVICES; LOSS OF USE, DATA, OR PROFITS; OR BUSINESS INTERRUPTION) HOWEVER CAUSED AND ON ANY THEORY OF LIABILITY, WHETHER IN CONTRACT, STRICT LIABILITY, OR TORT (INCLUDING NEGLIGENCE OR OTHERWISE) ARISING IN ANY WAY OUT OF THE USE OF THIS SOFTWARE, EVEN IF ADVISED OF THE POSSIBILITY OF SUCH DAMAGE.

Julian Seward, jseward@bzip.org

bzip2/libbzip2 version 1.0.5 of 10 December 2007

University of Illinois / NCSA Open Source License

Copyright (c) 1999-2007, The Board of Trustees of the University of Illinois All Rights Reserved.

Component Name	License
iperf-2.0.5	University of Illinois / NCSA Open Source

Iperf performance test

Mark Gates

Ajay Tirumala

Jim Ferguson

Jon Dugan

Feng Qin

Kevin Gibbs

John Estabrook

National Laboratory for Applied Network Research

National Center for Supercomputing Applications

University of Illinois at Urbana-Champaign

http://www.ncsa.uiuc.edu

Permission is hereby granted, free of charge, to any person obtaining a copy of this software (Iperf) and associated documentation files (the "Software"), to deal in the Software without restriction, including without limitation the rights to use, copy, modify, merge, publish, distribute, sublicense, and/or sell copies of the Software, and to permit persons to whom the Software is furnished to do so, subject to the following conditions:

Redistributions of source code must retain the above copyright notice, this list of conditions and the following disclaimers.

Redistributions in binary form must reproduce the above copyright notice, this list of conditions and the following disclaimers in the documentation and/or other materials provided with the distribution.

Neither the names of the University of Illinois, NCSA, nor the names of its contributors may be used to endorse or promote products derived from this Software without specific prior written permission. THE SOFTWARE IS PROVIDED "AS IS", WITHOUT WARRANTY OF ANY KIND, EXPRESS OR IMPLIED, INCLUDING BUT NOT LIMITED TO THE WARRANTIES OF MERCHANTABILITY, FITNESS FOR A PARTICULAR PURPOSE AND NONINFRINGEMENT. IN NO EVENT SHALL THE CONTIBUTORS OR COPYRIGHT HOLDERS BE LIABLE FOR ANY CLAIM, DAMAGES OR OTHER LIABILITY, WHETHER IN AN ACTION OF CONTRACT, TORT OR OTHERWISE, ARISING FROM, OUT OF OR IN CONNECTION WITH THE SOFTWARE OR THE USE OR OTHER DEALINGS IN THE SOFTWARE.

PHP 3.01 License

The PHP License, version 3.01 Copyright (c) 1999 - 2010 The PHP Group. All rights reserved.

Component Name	License	URL
php-5.2.17	PHP 3.01	http://www.php.net/distributions

Redistribution and use in source and binary forms, with or without modification, is permitted provided that the following conditions are met:

1. Redistributions of source code must retain the above copyright notice, this list of conditions and the following disclaimer.
2. Redistributions in binary form must reproduce the above copyright notice, this list of conditions and the following disclaimer in the documentation and/or other materials provided with the distribution.
3. The name "PHP" must not be used to endorse or promote products derived from this software without prior written permission. For written permission, please contact group@php.net.
4. Products derived from this software may not be called "PHP", nor may "PHP" appear in their name, without prior written permission from group@php.net. You may indicate that your software works in conjunction with PHP by saying "Foo for PHP" instead of calling it "PHP Foo" or "phpfoo"
5. The PHP Group may publish revised and/or new versions of the license from time to time. Each version will be given a distinguishing version number. Once covered code has been published under a particular version of the license, you may always continue to use it under the terms of that version. You may also choose to use such covered code under the terms of any subsequent version of the license published by the PHP Group. No one other than the PHP Group has the right to modify the terms applicable to covered code created under this License.
6. Redistributions of any form whatsoever must retain the following acknowledgment: "This product includes PHP software, freely available from <http://www.php.net/software/>".

THIS SOFTWARE IS PROVIDED BY THE PHP DEVELOPMENT TEAM ``AS IS'' AND ANY EXPRESSED OR IMPLIED WARRANTIES, INCLUDING, BUT NOT LIMITED TO, THE IMPLIED WARRANTIES OF MERCHANTABILITY AND FITNESS FOR A PARTICULAR PURPOSE ARE DISCLAIMED. IN NO EVENT SHALL THE PHP DEVELOPMENT TEAM OR ITS CONTRIBUTORS BE LIABLE FOR ANY DIRECT, INDIRECT, INCIDENTAL, SPECIAL, EXEMPLARY, OR CONSEQUENTIAL DAMAGES (INCLUDING, BUT NOT LIMITED TO, PROCUREMENT OF SUBSTITUTE GOODS OR SERVICES; LOSS OF USE, DATA, OR PROFITS; OR BUSINESS INTERRUPTION) HOWEVER CAUSED AND ON ANY THEORY OF LIABILITY, WHETHER IN CONTRACT, STRICT LIABILITY, OR TORT (INCLUDING NEGLIGENCE OR OTHERWISE) ARISING IN ANY WAY OUT OF THE USE OF THIS SOFTWARE, EVEN IF ADVISED OF THE POSSIBILITY OF SUCH DAMAGE.

This software consists of voluntary contributions made by many individuals on behalf of the PHP Group. The PHP Group can be contacted via Email at group@php.net.

For more information on the PHP Group and the PHP project, please see <http://www.php.net>. PHP includes the Zend Engine, freely available at <http://www.zend.com>.

zlib / libpng License

This software is provided 'as-is', without any express or implied warranty. In no event will the authors be held liable for any damages arising from the use of this software.

Component Name	License	URL
zlib-1.2.8	zlib / libpng	http://zlib.net/

Copyright (C) 1995-2010 Jean-loup Gailly and Mark Adler

Permission is granted to anyone to use this software for any purpose, including commercial applications, and to alter it and redistribute it freely, subject to the following restrictions:

1. The origin of this software must not be misrepresented; you must not claim that you wrote the original software. If you use this software in a product, an acknowledgment in the product documentation would be appreciated but is not required.
2. Altered source versions must be plainly marked as such, and must not be misrepresented as being the original software.
3. This notice may not be removed or altered from any source distribution.

Jean-loup Gailly Mark Adler

jloup@gzip.org madler@alumni.caltech.edu

The data format used by the zlib library is described by RFCs (Request for Comments) 1950 to 1952 in the files http://www.ietf.org/rfc/rfc1950.txt (zlib format), rfc1951.txt (deflate format) and rfc1952.txt (gzip format).

CCTV 설치 유의사항

공개된 장소에 CCTV 설치 운영시 이것만은 꼭 알아 두세요

[1] 범죄예방, 시설안전, 화재예방 목적으로만 설치 가능

- 목욕실, 화장실, 발한실(發汗室), 탈의실 등 사생활 침해 장소에는 설치 금지

[2] CCTV 안내판을 알아보기 쉬운 장소에 부착

- 설치목적, 촬영장소 · 범위 관리책임자 연락처 안내

[3] 녹음 금지 및 임의조작 금지

- 당초 설치 목적을 벗어나 함부로 조작하거나 다른 곳을 비추는 행위 금지

[4] CCTV 영상정보의 무단 유출 · 공개금지

- 개인영상정보를 제공하는 경우 본인 확인 후 필요 최소한으로 제공, 타인영상은 모자이크 처리

[5] CCTV 운영관리 방침수립 · 공개

- 개인 영상정보관리책임자 지정, CCTV 운영관리 방침을 홈페이지 등에 공개

[6] CCTV 영상정보의 안전성 확보조치

- 관리자 외 접근 통제, 관리자별 개별 ID 발급, 잠금장치 마련 등

※ 법 위반 내용과 정도에 따라 과태료 또는 벌금 등이 부과될 수 있습니다.

한화비전