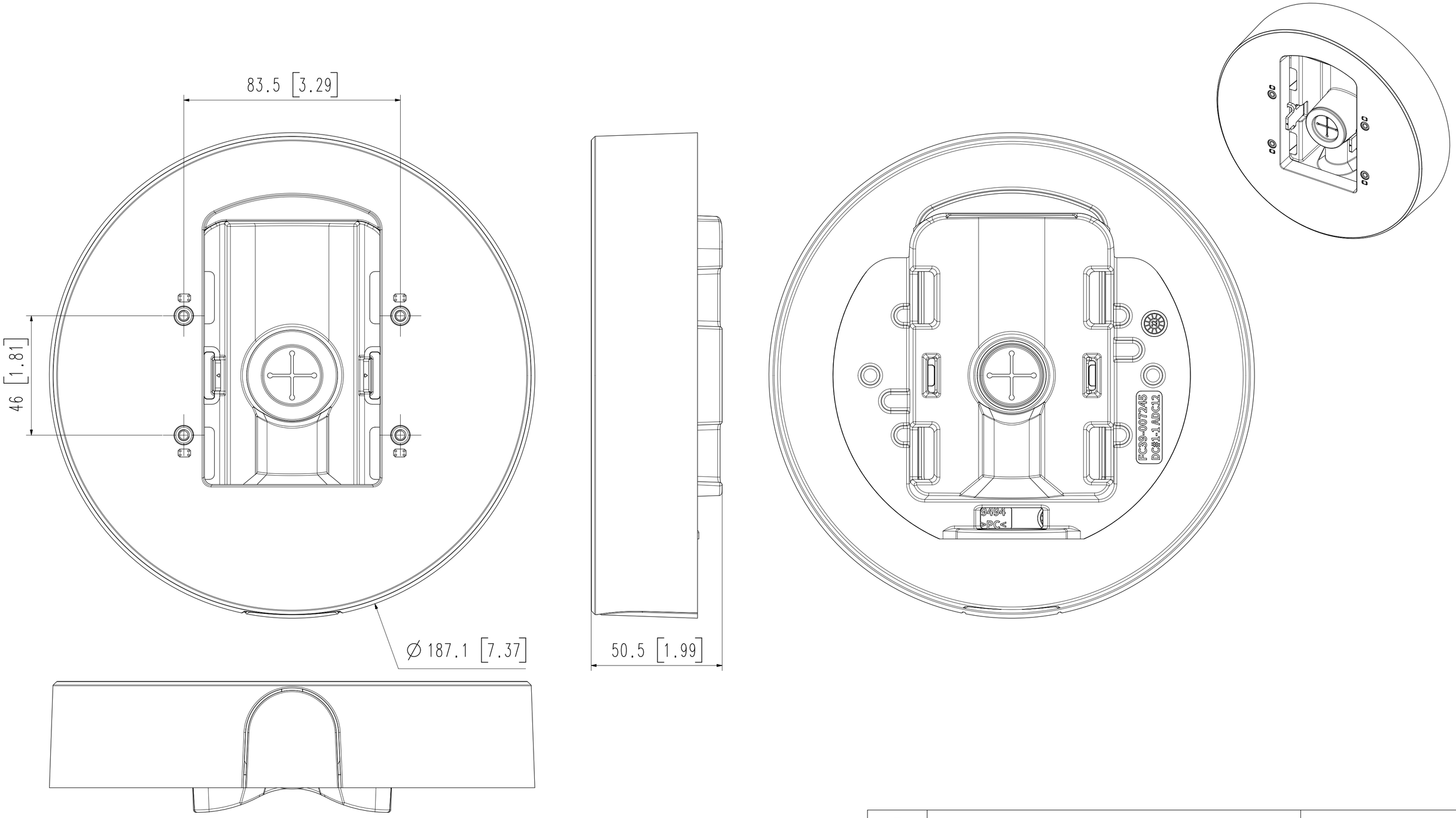

3		
2		
1	SBD-180PMW	22.11.08
No.	MODEL NAME	DATE

Unit:mm[inch] SCALE:1/1 Hanwha Techwin

A2

© Hanwha Techwin Co.,Ltd. All rights reserved.