TEST REPORT

CTK Co., Ltd.
(Ho-dong) 113, Yejik-ro, Cheoin-gu, Yongin-shi
Gyeonggi-do KOREA, REPUBLIC OF
Tel: +82-31-339-9970
Fax: +82-31-624-9501

REPORT No.:
CTK-2021-00381

1. Applicant

◦ Name ..... : Hanwha Techwin Co., Ltd.

◦ Address..... : 6 Pangyo-ro 319Beon-gil, Bundang-gu, Seongnam-si, Gyeonggi-do, 13488 KOREA

◦ **Date of Receipt.....:** 2021-01-25

2. Manufacturer

◦ Name ..... : Hanwha Techwin Co., Ltd./

3. Use of Report .....: Quality control

4. Test sample / Model .....: BULLET BACKBOX / SBO-147B

5. Date(s) of test .....: 2021-01-26 to 2021-01-29.

6. Test Standard (Method) used....: KS C IEC 60529:2013

7. Testing Environment.....: Temperature: (25.0 ± 10.0) °C, Humidity: (50 ± 25) %R.H., Air Pressure: (99.0 ± 2) kPa

8. Results .....: Refer to each test items

The results shown in this test report refer only to the sample(s) tested unless otherwise stated.
This report shall not be reproduced except in full without the written approval of CTK

Approval	Tested by: Soochan Bae (Signature)	Technical Manager: Yeonhwang Jung (Signature)

2021-02-03

CTK Co., Ltd.

Test place

Institution name	CTK Co., Ltd.
Address	113, Yejik-ro, Cheoin-gu, Yongin-si, Gyeonggi-do, Republic of Korea

1. Degrees of protection provided by enclosures (IP code)

1.1 Test standard: KS C IEC 60529:2013

1.2 Arrangement of the IP code

IP 6 6

Code letters (International protection)

First characteristic numeral (numerals 0 to 6, for letter X)

Second characteristic numeral (numerals 0 to 8, for letter X)

1.2.1 Degree of protection against access to hazardous parts indicated by the first characteristic numeral

First characteristic numeral	Degree of protection	Application
0	Non-protected	☐
1	Protected against access to hazardous parts with the back of a hand. The access probe, sphere of 50 mmØ, shall have adequate clearance from hazardous parts. Test force: 50 N ± 10 %	☐
2	Protected against access to hazardous parts with a finger. The jointed test finger of 12 mmØ, 80 mm length, shall have adequate clearance from hazardous parts. Test force: 10 N ± 10 %	☐
3	Protected against access to hazardous parts with a tool. The access probe of 2.5 mmØ, shall not penetrate. Test force: 3 N ± 10 %	☐
4	Protected against access to hazardous parts with a wire. The access probe of 1.0 mmØ, shall not penetrate. Test force: 1 N ± 10 %	☐
5	Protected against access to hazardous parts with a wire. The access probe of 1.0 mmØ, shall not penetrate. Test force: 1 N ± 10 %	☐

First characteristic numeral	Degree of protection	Application
6	Protected against access to hazardous parts with a wire. The access probe of 1.0 mmØ, shall not penetrate. Test force: 1 N ± 10 %	☒
NOTE In the case of the first characteristic numerals 3, 4, 5 and 6, protection against access to hazardous parts is satisfied if adequate clearance is kept. The adequate clearance should be specified by the relevant product committee in accordance with 12.3. Due to the simultaneous requirement specified in table 2, the definition "shall not penetrate" is given in table 1.		

1.2.2 Degree of protection against solid foreign objects indicated by the first characteristic numeral

First characteristic numeral	Degree of protection	Application
0	Non-protected	☐
1	Protected against solid foreign objects of 50 mmØ and greater. The object probe, sphere of 50 mmØ, shall not fully penetrate [1)]. Test force: 50 N ± 10 %	☐
2	Protected against solid foreign objects of 12.5 mmØ and greater. The object probe, sphere of 12.5 mmØ, shall not fully penetrate [1)]. Test force: 30 N ± 10 %	☐
3	Protected against solid foreign objects of 2.5 mmØ and greater. The object probe, sphere of 2.5 mmØ, shall not penetrate at all [1)]. Test force: 3 N ± 10 %	☐
4	Protected against solid foreign objects of 1.0 mmØ and greater. The object probe, sphere of 1.0 mmØ, shall not penetrate at all [1)]. Test force: 1 N ± 10 %	☐
5	Dust Testing Equipment Whether reductions in pressure below the atmospheric pressure are present or not, ingress of dust is not totally preventive, but dust shall not penetrate in a quantity to interfere with satisfactory operation of the apparatus or to impair safety. (Talcum powder have to go through the measured sieve by Φ 50 um wire that are spacing 75 um in squared, per volume and union Talcum powder have to be 2 kg/m^3)	—

First characteristic numeral	Degree of protection	Application
	Category 1: Enclosures where the normal working cycle of the equipment causes reductions in air pressure within the enclosure below that of the surrounding air, for example, due to thermal cycling effects. Products in volume .....: cm^3 → L Target intake volume (Products in volume 80) : L Suction volume (Max product in volume 60) .: LPH → LPM Actual Suction volume.....: L Suction pressure (Up to 2 kPa) .....: kPa Test time (Up to 8 time) .....: hr	☐
	Category 2: Enclosures where no pressure difference relative to the surrounding air is present.	☐
6	In Dust Testing Equipment, the test sample has to have no ingress of dust after testing atmospheric pressure present condition for 8 hr. (Talcum powder have to go through the measured sieve by Φ 50 um wire that are spacing 75 um in squared, per volume and union Talcum powder have to be 2 kg/m^3) Products in volume .....: **159.87** cm^3 → **0.159** L Target intake volume (Products in volume 80) : **12.789** L Suction volume (Max product in volume 60) .: **9.592** LPH → **0.159** LPM Actual Suction volume.....: **0.15** L Suction pressure (Up to 2 kPa) .....: **2** kPa Test time (Up to 8 time) .....: **8** hr	☒

[1)] The full diameter of the object probe shall not pass through an opening of the enclosure.
Due to the simultaneous requirement specified in table 2, the definition “shall not penetrate” is given in table 1.

1.2.3 Degrees of protection against water indicated by the second characteristic numeral

Second characteristic numeral	Degrees of protection	Application
0	Non-protected	☐
1	Water that drops verticality has to be harmless Drip box Fig.3, Enclosure on turntable Water flow rate: 1 mm/min Speed of Rotating platform: 1 r/min Eccentricity: Approximately 100 mm Duration of test: 10 min	☐
2	When outskirts of the product have been tilted by 15° Water that drops verticality has to be harmless. Drip box Fig.3, Enclosure in 4 fixed positions of 15° tilt Water flow rate: 3 mm/min Duration of test: 2.5 min for each position of tilt	☐
3	Vertical line of water that moves by ± 60° and its drops has to be harmless ☐ Oscillating tube Fig.4, Spray ± 60° from vertical, Distance max. 200 mm Water flow rate: each of watering pit 0.07 l/min ± 5 % per hole Duration of test: 10 min ☐ spray nozzle Fig. 5, Spray ± 60° from vertical Water flow rate: 10 l/min ± 5 % Duration of test: 1 min/m2 at least 5 min: **min**	☐
4	The product must not be harmed in any direction even splashing water. As for numeral 3, Spray ± 180° from vertical ☐ Oscillating tube Fig.4, Spray ± 180° from vertical, Distance max. 200 mm Water flow rate: each of watering pit 0.07 l/min ± 5 % per hole Duration of test: 10 min ☐ spray nozzle Fig. 5, Spray ± 180° from vertical Water flow rate: 10 l/min ± 5 % Duration of test: 1 min/m2 at least 5 min: **min**	☐

Second characteristic numeral	Degrees of protection	Application
5	The product must not be harmed in any direction even a single jet water. Water jet hose nozzle Fig.6, Nozzle 6.3 mm diameter Water flow rate: 12.5 l/min ± 5 % Distance: 2.5 m to 3 m: **3 m** Duration of test: 1 min/m^2 at least 3 min : **3 min**	☒
6	The product must not be harmed in any direction even strong jet water. Water jet hose nozzle Fig.6, Nozzle 12.5 mm diameter Water flow rate: 100 l/min ± 5 % : **LPM** Distance: 2.5 m to 3 m: **m** Duration of test: 1 min/m^2 at least 3 min: **min**	☐
7	Sink the product in the water by the Pressure and Time according to regulation and the product must not be harmed. Immersion tank water-level on enclosure with: ☐ height equal to or greater than 850 mm: the highst point of enclosures located 0.15 m below the surface of the water ☐ height less than 850 mm: the lowest point of enclosures located 1 m below the surface of the water Duration of test: 30 min	☐
8	Unless there is a relevant product standard, the test conditions are subject to agreement between manufacturer and user, but they shall be more severe than those prescribed in IP X7 and they shall take account of the condition that the enclosure will be continuously immersed in actual use. the lowest point of enclosures located below the surface of the water: **m** Duration of test: **min**	☐

1.3 Test Result

IP code	Remark
IP 6X	No penetration of probe No ingress of dust
IP X6	No ingress of water.

Manufacturer's name

Name and address of factory (ies)	1) HANWHA TECHWIN SECURITY VIETNAM CO.,LTD Lot O-2, Que Vo Industrial Zone extended area, Nam Son commune, Bac Ninh city, Bac Ninh province, Vietnam 2) D-TECH CO.,LTD. 173-25, Saneop-ro, Gwonseon-gu, Suwon-si, Gyeonggi-do, Korea(Suwon Industrial Complex)

List of test equipment used:

Instr. No.	Instrument type	Model	Make	Serial	Used
S3-T11	Sphere 50 mm diameter	IEC60529 IP1X	Kingpo	KP-TP001	☐
S1-J10	Jointed test finger	TFP-01	ED&D	S1-J10	☐
S1-J14	Test rod (2.5 mm)	TRP-01	ED&D	S1-J14	☐
S1-J15	Test wire (1.0 mm)	TRP-02	ED&D	S1-J15	☒
S1-X01	Push Pull Gage	FB30K	Imada	83805	☒
S3-IP8	Dust Chamber	IEC60529 IP 5X6X	Kingpo	TX0010	☐
S3-IP17	Big Dust Chamber	BR-TL-3F	Kingpo	S3-IP17	☒
S3-IP1	Drip Box	IEC 60529 Drip Box, IPX1/ IPX2	Kingpo	-	☐
S1-J19-1	ANGLE METER	AM-01	ED&D	CTK-IN-S1-154	☐
S3-IP3	Oscillating Tube	IEC 60529 oscillating tube, with rotate table, IPX3/ IPX4	Kingpo	-	☐
S3-IP4	Spray Nozzle	IEC 60529 Spray Nozzle, IPX3/ IPX4	Kingpo	-	☐
S3-IP5	Hose Nozzle (6.3 mm)	IPX5	Kingpo	ZH13388	☐
S3-IP6	Hose Nozzle (12.5 mm)	IPX6	Kingpo	ZH13388	☒
S3-IP7	Immersion tank	Cage for IPX7	Kingpo	-	☐
S1-E19	Electronics Load	EUL-75JL	Fujitsu	00373	☐
S1-P10	Digital Power Meter	WT210	Yokogawa	96F302605	☐
S1-W02	Withstanding voltage tester	TOS5051	KIKUSUI	14050357	☐
S1-SW2	Stop Watch	NONE	Casio	612Q1R-1	☒
S1-H05	Aneroid Barometer	BAROMEX	SATO	84682	☒
S1-H06	Hygro Thermograph	ST-50M	SEKONIC	HE51-000147	☒

2. APPENDIX

2.1 Product Photographs

< Photo 1 > Product External view

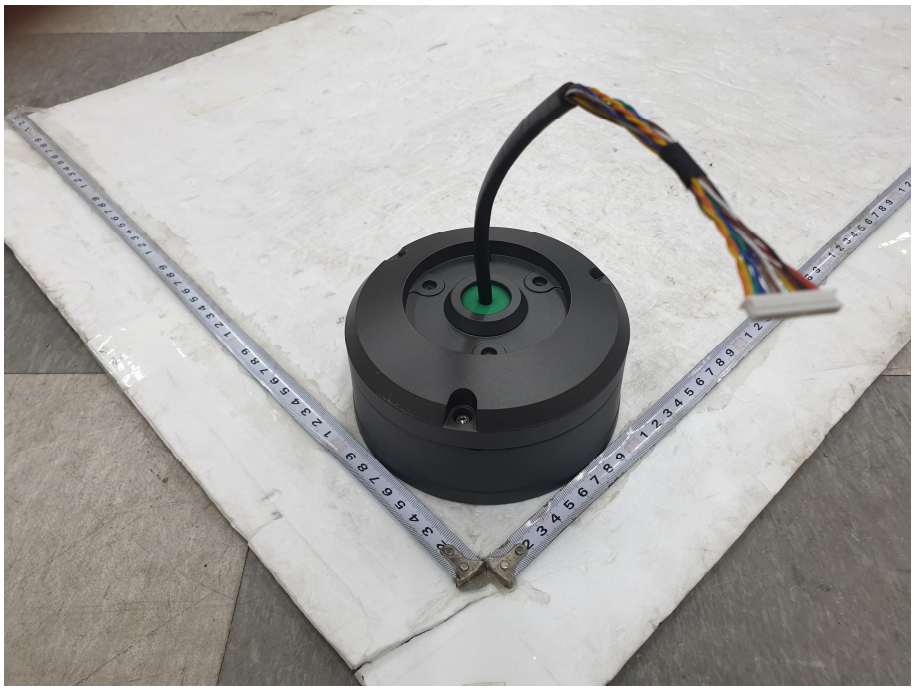

< Photo 2 > Product External view

2.2 Test Setup Photos and Configuration

< Photo 3 > The first characteristic numeral test

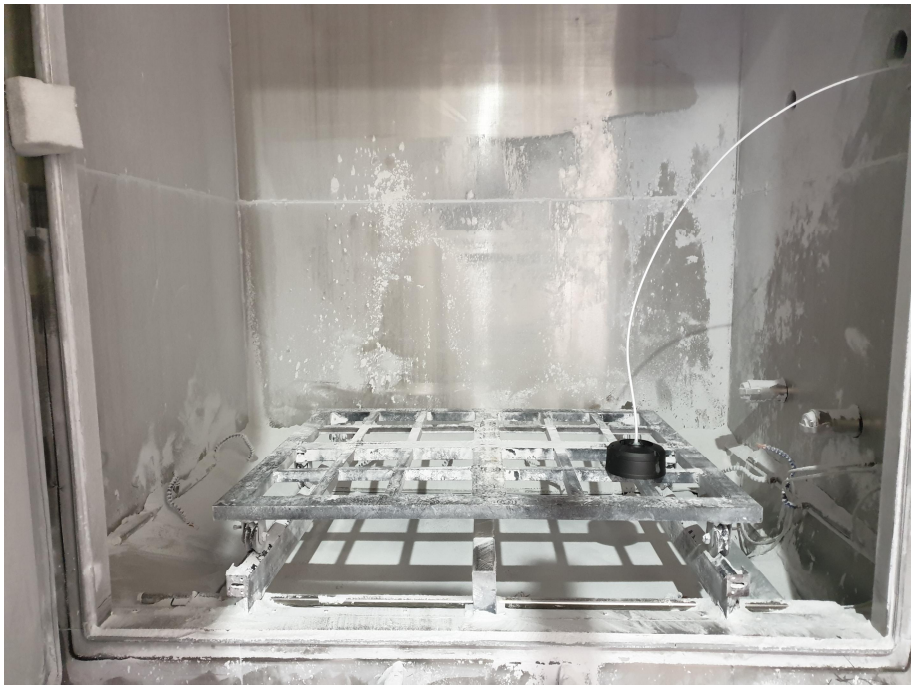

< Photo 4 > The second characteristic numeral test

2.3 Product internal photographs after test

< Photo 5 > The first characteristic numeral test

< Photo 6 >

< Photo 7 >

< Photo 8 > The second characteristic numeral test

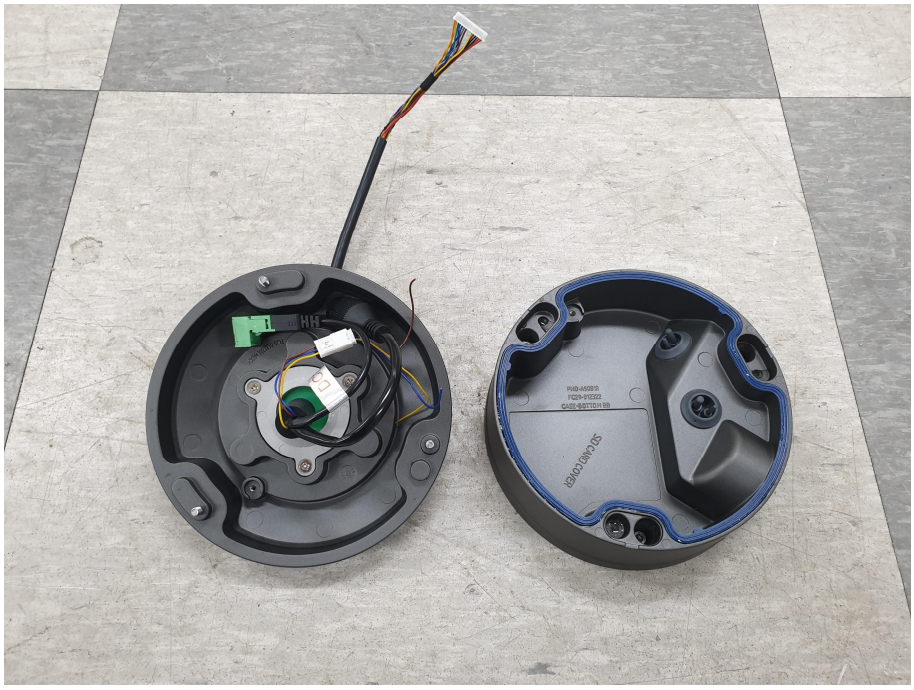

< Photo 9 >

< Photo 10 >

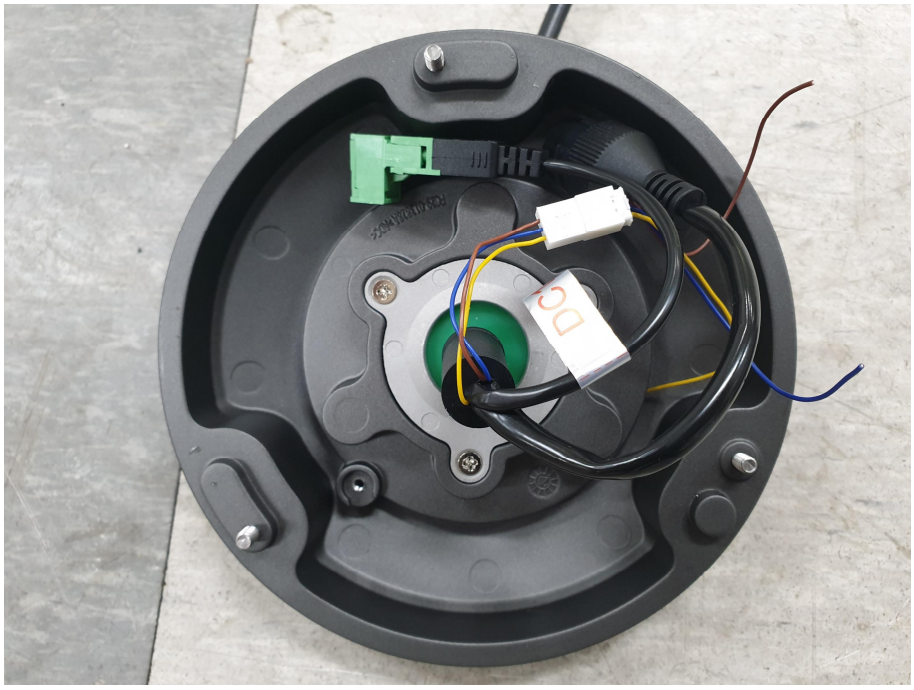

2.4 Product Appearance

Enclosure Dimensions [Unit: mm]

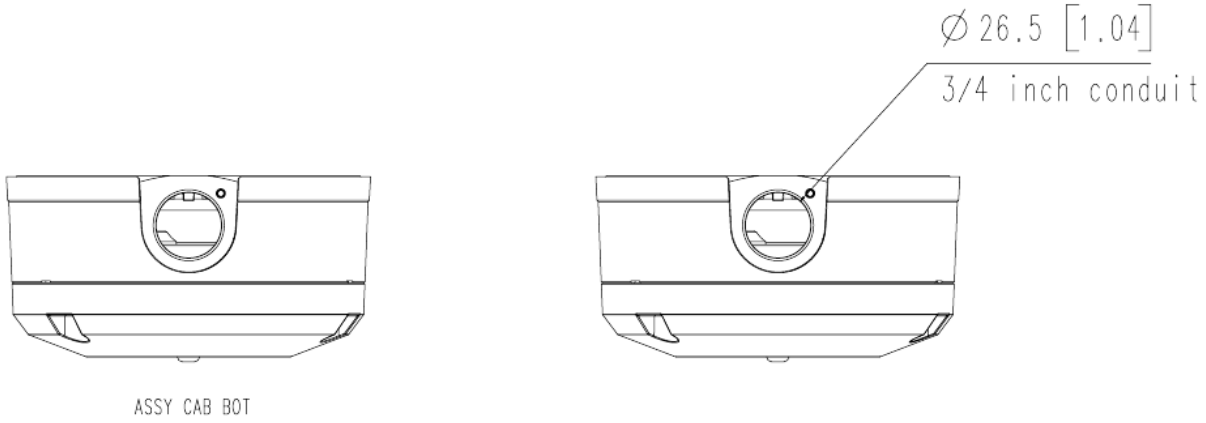

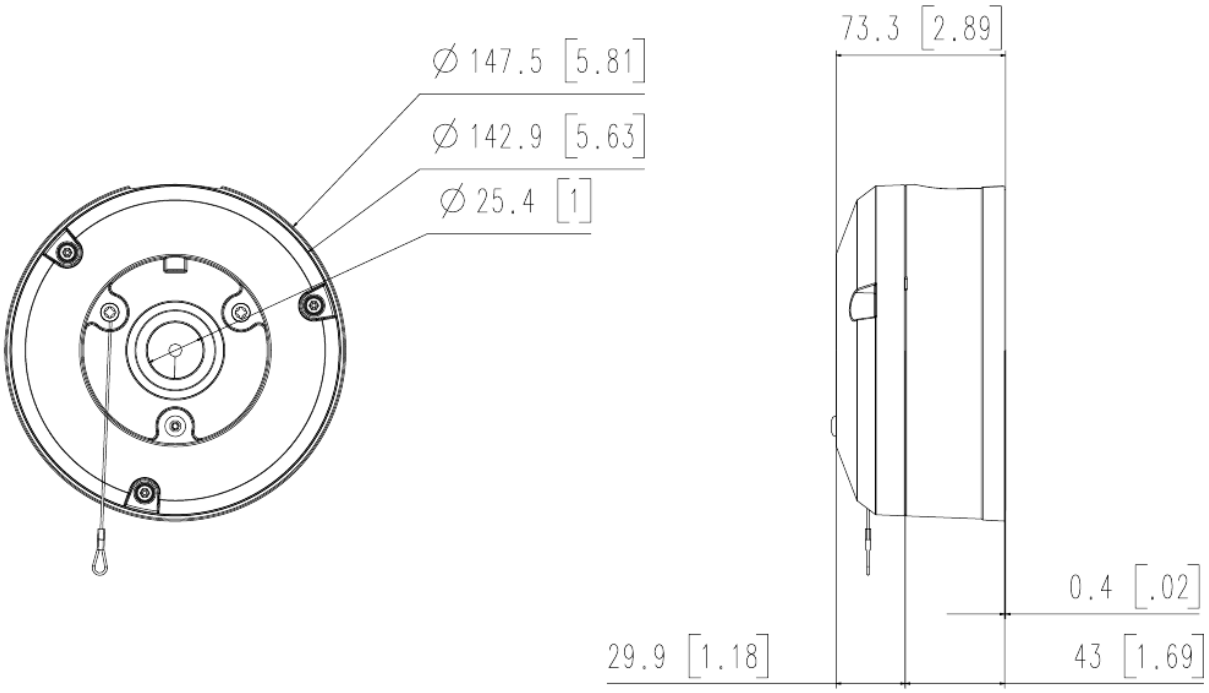

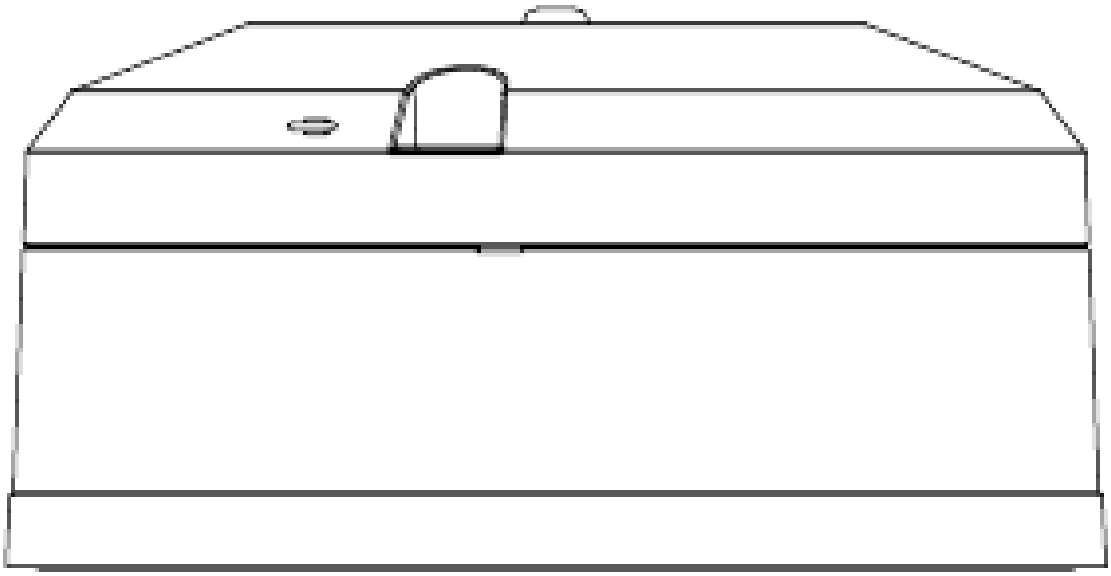

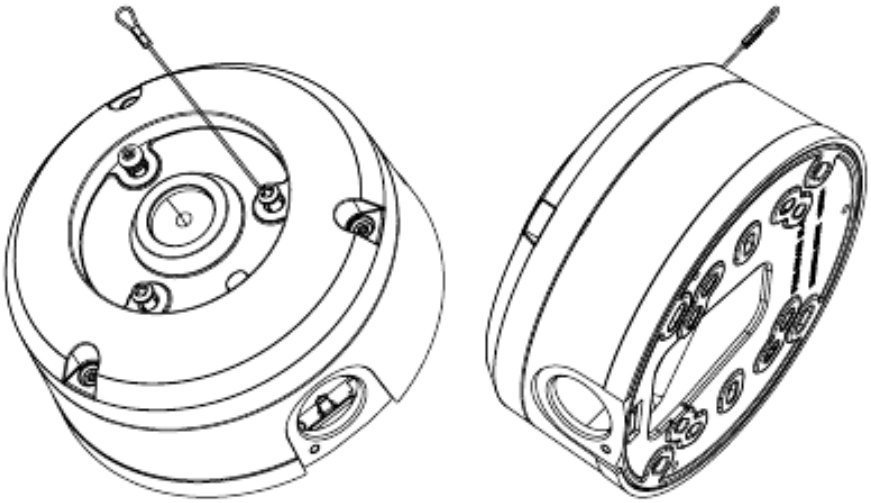

SCALE 2:3

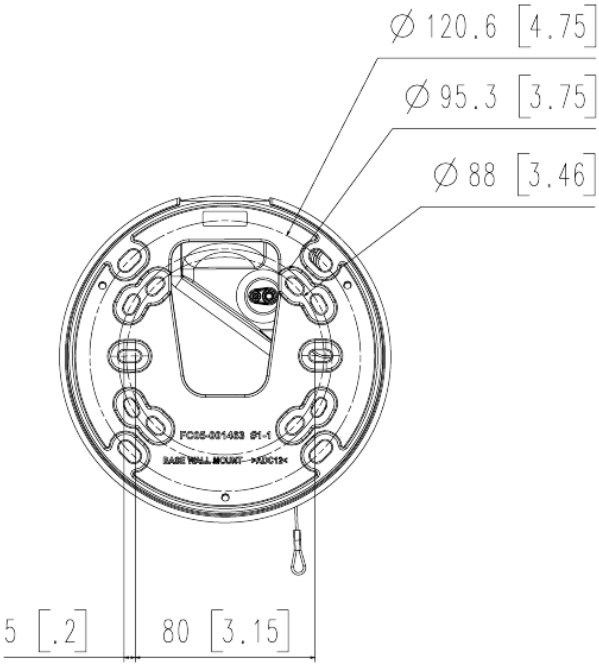
∅ 120.6 [4.75]
∅ 95.3 [3.75]
∅ 88 [3.46]
5 [.2]
80 [3.15]