Hanwha Vision

ТЕПЛОВИЗИОННАЯ СЕТЕВАЯ КАМЕРА

Руководство пользователя

TNO-4030T/TNO-4040T/TNO-4041T
TNO-4050T/TNO-4051T
TNO-4030TR/TNO-4040TR/TNO-4041TR
TNO-L4030T/TNO-L4030TR

CE

Тепловизионная Сетевая Камера

Руководство пользователя

Авторское право

©2022 Hanwha Vision Co., Ltd. Все права защищены.

Все права защищены

Каждый из торговых знаков далее в документе является зарегистрированным. Название данного продукта и другие торговые знаки, упоминаемые в данном руководстве, являются зарегистрированными торговыми знаками соответствующих компаний.

Ограничения

Данный документ защищен авторским правом. Данный документ ни при каких обстоятельствах не разрешается воспроизводить, распространять или изменять, полностью или частично, без документально подтвержденного разрешения.

Отказ от ответственности

Компания Hanwha Vision тщательно проверяет достоверность и правильность содержимого данного документа, однако не несет официальной ответственности за представленную информацию. Пользователь несет полную личную ответственность за использование этого документа и за последующие результаты. Компания Hanwha Vision оставляет за собой право изменять содержание документа без предварительного уведомления.

❖ **Конструкция и характеристики устройства могут быть изменены без предварительного уведомления.**

❖ **Первоначальный ID администратора - "admin", а пароль следует задать при первом входе в систему.**
Для надежной защиты личной информации и предотвращения ущерба от кражи данных меняйте пароль каждые три месяца.
Имейте в виду, что ответственность за безопасность а также за любые проблемы, связанные с ненадлежащим обращением с паролем, несет пользователь.

ВАЖНЫЕ ПРАВИЛА ТЕХНИКИ БЕЗОПАСНОСТИ

1. Прочтите эти правила.
2. Сохраните эти правила.
3. Принимайте во внимание все предупреждения.
4. Следуйте всем правилам.
5. Не используйте изделие вблизи воды.
6. Очищайте загрязненные места на поверхности изделия мягкой, сухой или влажной тряпкой. (Не используйте моющие средства либо косметические продукты, содержащие спирт, растворители. либо ПАВ, либо смазочные материалы, поскольку они могут привести к деформации или повреждению продукта.)
7. Не загораживайте никакие вентиляционные отверстия. Выполните установку изделия в соответствии с инструкциями изготовителя.
8. Не устанавливайте изделие рядом с источниками тепла, такими, как радиаторы, решетки системы отопления, или другими устройствами, которые генерируют тепло (включая усилители).
9. В целях безопасности не отказывайтесь от использования вилок поляризованного или заземляющего типа. Вилка поляризованного типа имеет два ножевых контакта, один из которых шире другого. Вилка заземляющего типа имеет два контакта и третий заземляющий штырь. Широкое лезвие третьего заземляющего штыря предусмотрено для вашей безопасности. Если вилка поставляемого вместе с аппаратом шнура питания не подходит для вашей розетки, попросите опытного электрика заменить старую розетку.
10. Не наступайте на шнур питания и не допускайте его защемления, особенно вблизи от штепсельной вилки, в месте подключения к розетке и там, где шнур выходит из изделия.
11. Пользуйтесь только теми приспособлениями/ принадлежностями, которые рекомендованы изготовителем.
12. Используйте устройство только с тележкой, подставкой, штативом, кронштейном и столом, указанными производителем или приобретенными вместе с устройством. Во избежание травм вследствие опрокидывания тележки с устройством соблюдайте осторожность при ее передвижении.

13. Отсоединяйте устройство от сети во время грозы или если оно не используется в течение длительного времени.
14. Все работы, связанные с техническим обслуживанием изделия, должны выполняться квалифицированными специалистами по техническому обслуживанию. Обслуживание изделия требуется выполнять, когда изделие получило какое-либо повреждение, например, был поврежден его шнур питания или вилка шнура питания, внутрь изделия попала жидкость или посторонние предметы, изделие подверглось воздействию дождя или влаги, изделие не работает должным образом, а также после падения изделия.
15. Данное изделие предназначено для питания от утвержденных источников питания с маркировкой “Class 2” или “LPS” с номинальным выходом 24 В перем. тока (50/60 Гц), не менее .0.91А, либо 12 В пост. тока, не менее 0.83А.
16. Если при установке изделия прилагать чрезмерные усилия, возможно повреждение с нарушением работы камеры. Если с силой устанавливать устройство, пользуясь неподходящими инструментами, возможно повреждение устройства.
17. Не допускается установка устройства в местах, где присутствуют или могут появляться химические вещества или пары масла, Поскольку пищевые масла, например, соевое, могут вызвать повреждение или привести к деформации устройства, не устанавливайте его на кухне или вблизи кухонного стола. В противном случае возможна порча устройства.
18. При установке устройства будьте осторожны, не допускайте попадания химических веществ на его поверхность. Некоторые химические растворители, например, очистители или клеящие вещества, могут сильно повредить поверхность продукта.
19. Если монтировать/демонтировать устройство не рекомендованным образом, нельзя гарантировать выполнение функций/соответствие характеристик устройства. Устанавливайте устройство, обратившись к разделу “Установка и подключение” в руководстве пользователя.
20. Установка или эксплуатация устройства в воде может привести к значительному повреждению изделия.

ПРЕДУПРЕЖДЕНИЕ

ВО ИЗБЕЖАНИЕ ПОВРЕЖДЕНИЙ, СЛЕДСТВИЕМ КОТОРЫХ МОЖЕТ БЫТЬ ПОЖАР ИЛИ ПОРАЖЕНИЕ ЭЛЕКТРИЧЕСКИМ ТОКОМ, НЕ ДОПУСКАЙТЕ ПОПАДАНИЯ ДАННОГО ИЗДЕЛИЯ ПОД ДОЖДЬ ИЛИ В УСЛОВИЯ ВЫСОКО Й ВЛАЖНОСТИ. ЗАПРЕЩАЕТСЯ ВСТАВЛЯТЬ КАКИЕ-ЛИБО МЕТАЛЛИЧЕСКИЕ ПРЕДМЕТЫ В ВЕНТИЛЛЯЦИОННЫЕ РЕШЕТКИ ИЛИ ДРУГИЕ ОТВЕРСТИЯ В ОБОРУДОВАНИИ.

Не подвергайте устройство воздействию жидкостей. Не следует также ставить на него предметы, наполненные жидкостью, например вазы.

Во избежание травм данное устройство должно быть надежно закреплено на стене/потолке в соответствии с инструкциями по установке.

ВНИМАНИЕ

ВНИМАНИЕ

ОПАСНОСТЬ ПОРАЖЕНИЯ ЭЛЕКТРИЧЕСКИМ ТОКОМ. НЕ ОТКРЫВАТЬ

ВНИМАНИЕ : ВО ИЗБЕЖАНИЕ ПОРАЖЕНИЯ ЭЛЕКТРИЧЕСКИМ ТОКОМ, НЕ СНИМАЙТЕ ЗАДНЮЮ КРЫШКУ.ВНУТРИ НЕТ ДЕТАЛЕЙ, ОБСЛУЖИВАЕМЫХ ПОЛЬЗОВАТЕЛЕМ. ДЛЯ ТЕХНИЧЕСКОГО ОБСЛУЖИВАНИЯ ОБРАЩАЙТЕСЬ К КВАЛИФИЦИРОВАННОМУ СПЕЦИАЛИСТУ.

ОПИСАНИЕ ГРАФИЧЕСКИХ ОБОЗНАЧЕНИЙ

Молния со стрелкой в равностороннем треугольнике предупреждает пользователя об “опасном напряжении” в корпусе изделия, которое может представлять риск поражения электрическим током.

Восклицательный знак в равностороннем треугольнике предупреждает пользователя о важных инструкциях по работе и обслуживанию в руководстве, которое прилагается к устройству.

Класс Конструкции I

Устройства КЛАССА I следует подключать к ЭЛЕКТРО розетке с защитным заземлением.

Батарея

Не подвергайте батареи (батарейный блок) чрезмерному нагреванию под воздействием солнечных лучей, огня и т.п.

Отключение устройства

Отсоедините вилку кабеля питания от устройства в случае повреждения. Обратитесь к местному специалисту по ремонту.

При использовании за пределами США с соединениями одобренными соответствующим органом, может использоваться кодировка HAR.

ВНИМАНИЕ

Существует риск взрыва при замене батарее на батарею несоответствующего типа. Утилизируйте использованные батареи в соответствии с инструкциями.

Настоящие инструкции по обслуживанию предназначены только для квалифицированных специалистов.
Во избежание поражения электрическим током не следует выполнять работы по обслуживанию, описанные в инструкциях по эксплуатации, если вы не обладаете соответствующей квалификацией.

Выходной разъем CVBS устройства предназначен для облегчения монтажа и не рекомендуется использовать его для целей мониторинга.

К источнику входного питания может подсоединяться только одна камера.

Оборудование ITE подключается только к сети питания по Ethernet без маршрутизации на оборудование наружной установки.

Внимательно прочитайте приведенные ниже правила техники безопасности.

- Не ставьте устройство на неровную поверхность.
- Не устанавливайте устройство на поверхность, подверженную прямым солнечным лучам, рядом с нагревательным оборудованием или в очень холодном месте.
- Не устанавливайте это устройство вблизи электропроводящего.
- Не следует ремонтировать устройство самостоятельно.
- Не следует ставить на устройство стаканы с водой.
- Не устанавливайте поблизости источники магнитного поля.
- Не допускайте заграждения вентиляционных отверстий.
- Не ставьте тяжелые предметы на устройство.
- При установке/демонтаже камеры надевайте защитные перчатки.
  Высокая температура поверхности изделия может вызвать ожог.

Руководство пользователя содержит инструкции по использованию продуктов.

В руководстве используются следующие обозначения.

- Справка : сведения по использованию устройства
- Примечание : На случай возможных повреждений имущества или вреда здоровью людей в результате несоблюдения инструкций

※ Прочтите это руководство по безопасности перед использованием устройств и сохраните его в безопасном месте.

В некоторых условиях установки могут возникать помехи радиосвязи.
Если данное устройство и какое-либо устройство радиосвязи создают взаимные электромагнитные помехи, рекомендуется разнести их на достаточное расстояние или изменить направление приемной антенны.

СОДЕРЖАНИЕ

ОБЗОР 3

3 Важные правила техники безопасности
6 Рекомендуемая Конфигурация Пк
6 Рекомендуемые характеристики карт памяти Микро SD/SDHC/SDXC
6 Рекомендуемые Технические Характеристики NAS
7 Комплект Поставки (TNO-4030T/4040T/4050T/4030TR/4040TR/4030T/L4030TR)
8 Комплект Поставки (TNO-4041T/4051T/4041TR)
9 Общий Обзор (TNO-4030T/4040T/4050T/4030TR/4040TR/L4030T/L4030TR)
9 Общий Обзор (TNO-4041T/4051T/4041TR)

УСТАНОВКА И ПОДКЛЮЧЕНИЕ 10

10 Установка (TNO-4030T/4040T/4050T/4030TR/4040TR/L4030T/L4030TR)
11 Установка (TNO-4041T/4051T/4041TR)
13 Установка/извлечение карты памяти Микро SD
14 Информация о Карточке Памяти (Не Включено)
14 Подключение к Другому Устройству

СЕТЕВОЕ СОЕДИНЕНИЕ И НАСТРОЙКА 18

18 Подключение Камеры Напрямую к Локальной Сети
18 Прямое Подключение Камеры к Модему DSL/кабельному Модему С Поддержкой Протокола DHCP
19 Подключение Камеры Напрямую к Модему PPPoE
19 Подключение Камеры к Широкополосный маршрутизатор Через PPPoE/кабельный Модем
20 Использование Device Manager
20 Автоматический поиск камеры
20 Настройка IP-адреса
21 Регистрация камеры вручную
21 Автоматическая настройка IP
22 Настройка Переадресации Диапазона Портов (Распределение Портов)
23 Подключение к Камере с Локального Компьютера Общего Доступа
23 Подключение к Камере с Удаленного Компьютера Через Интернет

ИНТЕРАКТИВНАЯ ПРОГРАММА ПРОСМОТРА 24

24 Подключение к Камере
24 Установка пароля
24 Вход
24 Настройка Web Viewer

ПРИЛОЖЕНИЕ 25

25 Поиск и Устранение Неполадок
26 Open Source Announcement

РЕКОМЕНДУЕМАЯ КОНФИГУРАЦИЯ ПК

- Процессор : Intel(R) Core(TM) i7 3,4 Ггц или больше
- ОЗУ: 8 ГБ или больше
- Рекомендуемый браузер: Chrome
- Поддерживаемые браузеры: Chrome, Safari, Firefox, MS Edge(chromium based)
- Поддерживаемые ОС : Windows, Mac, Linux, Android, iOS, Chrome
- Среда проверки
  - Windows 10: Google Chrome версии 80 или новее, Firefox версии 72 или новее, MS Edge версии 83 или новее
  - Mac 10.13/14: Safari версии 11.0.1 или новее

※ Производительность просмотра видео в Web Viewer зависит от производительности процессора и графической платы компьютера пользователя.

РЕКОМЕНДУЕМЫЕ ХАРАКТЕРИСТИКИ КАРТ ПАМЯТИ МИКРО SD/SDHC/SDXC

- Рекомендуемая емкость : от 16 до 256 Гбайт (Требуется тип MLC или 3D TLC)
- Рекомендуемые производители: SanDisk, Transcend, Samsung
- Тип продукта: Высокопрочный, для профессионального использования
- Совместимость может отличаться в зависимости от производителя и типа карты.

РЕКОМЕНДУЕМЫЕ ТЕХНИЧЕСКИЕ ХАРАКТЕРИСТИКИ NAS

- Рекомендуемый объем : Рекомендуемый объем – не менее 200 ГБ.
- Для этой модели камеры рекомендуется использование NAS со следующими техническими характеристиками производителя.

  Рекомендуемые продукты : QNAP NAS, Synology NAS

КОМПЛЕКТ ПОСТАВКИ (TNO-4030T/4040T/4050T/4030TR/4040TR/4030T/L4030TR)

Проверьте наличие всех принадлежностей в комплекте поставки камеры.
(У изделий, продаваемых в разных странах, принадлежности могут отличаться.)

Внешний вид	Название элемента	Количество	Описание
	Камера	1	
	Краткое Руководство (необязательно)	1	
	Гарантийный талон (необязательно)	1	
	Кабель для тестирования монитора	1	Используется для подключения камеры к портативному устройству отображения
	Шаблон	1	Руководство по установке устройства
	Клеммник питания	1	Вставлен в разъем электропитания
	Соединительный блок аудио/тревожной сигнализации	1	Вставляется в вилку аудио/тревожной сигнализации
	Шнур питания	1	Вставляется в разъем питания

Внешний вид	Название элемента	Количество	Описание
	Г-образный ключ	1	Используется для снятия и замены крышки купола
	Звуковой кабель/кабель тревоги	1	Подключается в звуковой разъем и разъем тревоги
	Самонарезающий винт	4	Используются для установки на стену или потолок
	Светозащитная бленда	1	Защищает камеру от воздействия прямых солнечных лучей.
	Держатель светозащитной бленды	1	Используется для закрепления светозащитной бленды на камере
	BASE WALL MOUNT	1	Для подвешивания камеры на стене переходник необходимо отрегулировать.
	Кабельная втулка	1	Используется для подключения локальной сети кабелем Ø7~8.5.

КОМПЛЕКТ ПОСТАВКИ (TNO-4041T/4051T/4041TR)

Проверьте наличие всех принадлежностей в комплекте поставки камеры.
(У изделий, продаваемых в разных странах, принадлежности могут отличаться.)

Внешний вид	Название элемента	Количество	Описание
	Камера	1	
	Краткое Руководство (необязательно)	1	
	Гарантийный талон (необязательно)	1	
	Кабель для тестирования монитора	1	Используется для подключения камеры к портативному устройству отображения
	Клеммник питания	1	Вставлен в разъем электропитания
	Соединительный блок аудио/тревожной сигнализации	1	Вставляется в вилку аудио/тревожной сигнализации
	Шнур питания	1	Вставляется в разъем питания
	Звездообразный ключ	1	Используется для крепления PT-кронштейна к основному корпусу
	Звуковой кабель/кабель тревоги	1	Подключается в звуковой разъем и разъем тревоги

Внешний вид	Название элемента	Количество	Описание
	Светозащитная бленда	1	Защищает камеру от воздействия прямых солнечных лучей.
	Держатель светозащитной бленды	1	Используется для закрепления светозащитной бленды на камере
	Влагозащитная заглушка	1	Используется для перекрытия части отверстия, через которую не выходит кабель.
	Влагозащитный адаптер	1	Диапазон сечений кабеля: Ø2 мм (минимум) ~ Ø6 мм (максимум) Используется для подключения кабелей (Например: кабеля питания) ※ Имеющиеся кабельные сальники от камеры применимы для кабеля Ø4,5 мм (минимум) ~ Ø10 мм (максимум)

ОБЩИЙ ОБЗОР (TNO-4030T/4040T/4050T/4030TR/4040TR/L4030T/L4030TR)

Внешний вид & Компоненты

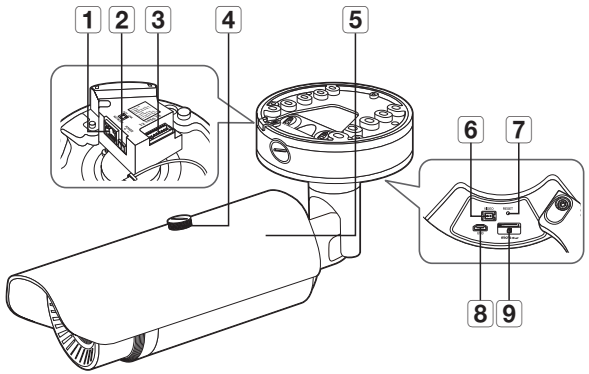

Элемент	Описание
1 **Порт Сеть**	Подсоединение кабеля PoE или Ethernet для установки сетевого подключения.
2 **Порт питания**	Используется для подключения кабеля питания.
3 **Разъем аудио и кабеля сигнала тревоги**	Порт для подключения аудиокабеля и кабеля сигнализации.
4 **Держатель светозащитной бленды**	Используется для закрепления светозащитной бленды на камере.
5 **Светозащитная бленда**	Защищает камеру от воздействия прямых солнечных лучей.
6 **Порт тестирования выходного сигнала монитора**	Порт вывода для тестирования выходного видеосигнала наблюдения. Подсоедините мобильный дисплей к порту с помощью кабеля для тестирования видеонаблюдения и проверьте видео.
7 **Кнопка сброса**	Восстановление заводских настроек по умолчанию для всех параметров камеры. Для перезагрузки системы нажмите и удерживайте в течение 5 секунд. ! Если сбросить настройки камеры, то сетевые настройки позволят активировать DHCP. Если в сети нет DHCP-сервера, то перед первым подключением к сети необходимо запустить программу Device Manager, чтобы изменить основные сетевые параметры, такие как IP-адрес, маска подсети, шлюз и т. д.
8 **Порт Micro-USB**	Порт для подключения адаптера Wi-Fi. Можно просмотреть видео об установке через приложения, установленные на смартфоне. См. “**Подключение к адаптеру Wi-Fi**” на стр. 15. ■ Аппаратный ключ Wi-Fi и переходник OTG продаются отдельно.
9 **Гнездо для карты памяти Micro SD**	В это гнездо можно вставить карту памяти MicroSD.

ОБЩИЙ ОБЗОР (TNO-4041T/4051T/4041TR)

Внешний вид & Компоненты

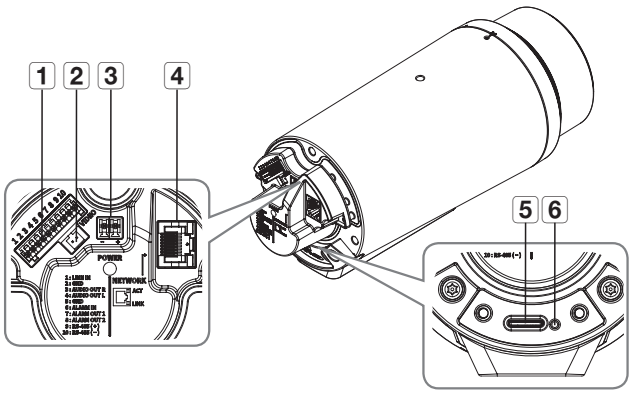

Элемент	Описание
1 **Разъем аудио и кабеля сигнала тревоги**	Порт для подключения аудиокабеля и кабеля сигнализации.
2 **Порт тестирования выходного сигнала монитора**	Порт вывода для тестирования выходного видеосигнала наблюдения. Подсоедините мобильный дисплей к порту с помощью кабеля для тестирования видеонаблюдения и проверьте видео.
3 **Порт питания**	Используется для подключения кабеля питания.
4 **Порт Сеть**	Подсоединение кабеля PoE или Ethernet для установки сетевого подключения.
5 **Гнездо для карты памяти Micro SD**	В это гнездо можно вставить карту памяти MicroSD.
6 **Кнопка сброса**	Восстановление заводских настроек по умолчанию для всех параметров камеры. Для перезагрузки системы нажмите и удерживайте в течение 5 секунд. ! Если сбросить настройки камеры, то сетевые настройки позволят активировать DHCP. Если в сети нет DHCP-сервера, то перед первым подключением к сети необходимо запустить программу Device Manager, чтобы изменить основные сетевые параметры, такие как IP-адрес, маска подсети, шлюз и т. д.

УСТАНОВКА (TNO-4030T/4040T/4050T/4030TR/4040TR/L4030T/L4030TR)

- Эта камера водонепроницаема и соответствует стандарту IP66, однако штекер внешнего кабеля водонепроницаемым не является. Рекомендуется установить это устройство под карнизом во избежание выступания кабеля наружу.

Меры предосторожности, принимаемые перед установкой

Прежде чем устанавливать камеру, обязательно прочтите приведенные далее инструкции.

- Установку необходимо выполнять в таком месте (на потолке или стене), которое может выдержать вес в пять раз превышающий вес камеры, включая установочный кронштейн.
- Кабели с поврежденной или снятой изоляцией могут стать причиной повреждения устройства или возгорания.
- С целью предосторожности попросите посторонних лиц покинуть место установки. На всякий случай уберите все посторонние личные вещи.
- Не используйте отверстие, предназначенное для подсоединения солнечного козырька, в иных целях.
- Если при установке изделия прилагать чрезмерные усилия, возможно повреждение с нарушением работы камеры. Если с силой устанавливать устройство, пользуясь неподходящими инструментами, возможно повреждение устройства.

Установка

1. Для фиксации опорного настенного крепления используйте четыре прилагающихся самонарезных винта.

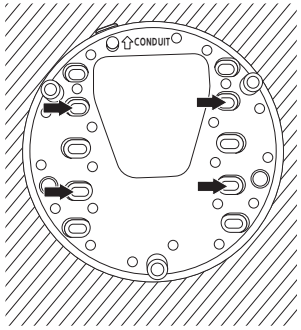

2. Подвесьте кабель системы безопасности сверху на крюк, похожий на стрелку, расположенный на нижней крышке.
3. Подключите требующиеся кабели к соединителям камеры.
4. После размещения нижней крышки на опорном настенном креплении, прилагающимся угловым гаечным ключом установите и закрепите три винта.
5. После размещения камеры на нижней крышке, прилагающимся угловым гаечным ключом установите три винта на верхней крышке.

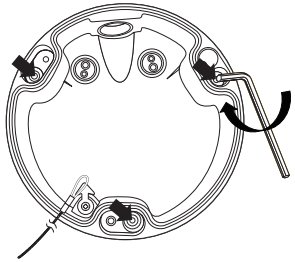

6. С помощью прилагаемого углового ключа настройте направление обзора камеры.

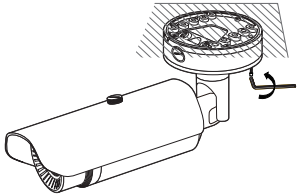

- Для регулировки положения камеры на кронштейне отверните винты кронштейна, настройте камеру и затяните винты. Если пытаться регулировать положение при затянутых винтах с приложением силы, это может привести к появлению трещин и другим проблемам.

Соединение водонепроницаемого шнура питания и кабеля LAN

1. Оторвите выступающую часть резиновой крышки на нижней стороне нижней крышки, как показано на рис. ниже.

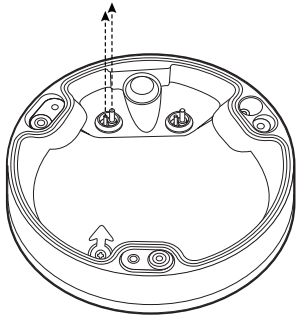

- Для подключаемого кабеля локальной сети используйте соответствующую втулку.
  - Базовая камера: используйте кабель Ø5~6.5.
  - Прилагаемые компоненты: Используйте кабель Ø7~8.5.

2. Вставьте кабель питания в небольшое отверстие, образовавшееся при отрывании выступающей части резиновой заглушки, как описано в п. 1 выше.
3. Соедините шнур питания с клеммником питания.

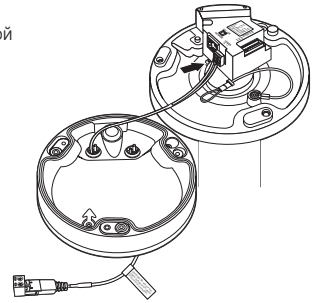

4. Вставьте кабель LAN в большое отверстие, возникшее при извлечении выступающей части резиновой пробки на шаге 1, описанном выше.
5. Удалите оболочку с помощью кабельного резака и выровняйте кабели.
6. Подключите кабель LAN с помощью коннектора LAN и вставьте его в инструмент LAN.
7. Подключите готовый кабель к порту Ethernet.

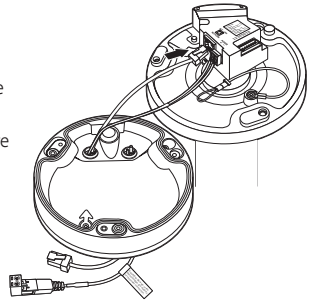

Подключение кабеля аудио и сигнализации

1. Удалите резиновую крышку на нижней стороне нижней крышки, как показано на рис. ниже.

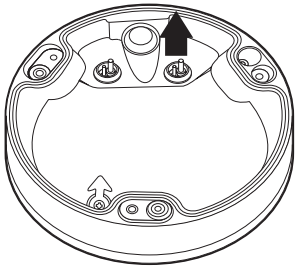

2. Вставьте кабель аудио/сигнализации через отверстие, образующееся при снятии резинового колпачка №1, и подключите кабель к соединителю сигнализации.
3. Выровняйте кабель таким образом, чтобы он не повредился и не пережимался во время установки камеры.
4. Введите в отверстие резиновый колпачок, расположенный на кабеле аудиосигнала/сигнализации.

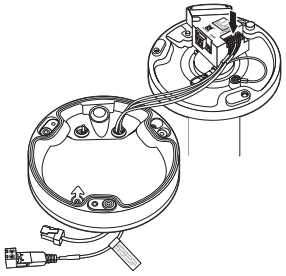

Наружный монтаж

При монтаже этого устройства вне здания, пожалуйста, обеспечьте его водонепроницаемость с помощью водонепроницаемой ленты бутилкаучука (ее можно купить в магазине) так, чтобы вода не протекла в щель кабеля, выведенного наружу.

1. Connectez à des câbles, tels que E / S et audio.
2. Оберните черный кабельный кожух (Зона A) и зону присоединения кабеля водонепроницаемой лентой (бутилкаучук) так, чтобы лента бутилкаучука перекрывалась больше чем на половину.

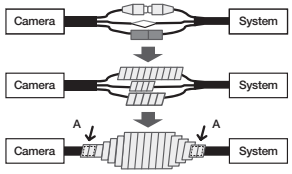

- Если не обеспечена надлежащая водонепроницаемость кабельного кожуха, это может стать причиной течи. Удостоверьтесь, что кабель обмотан толстым слоем ленты.
- Водонепроницаемая лента сделана из бутилкаучука, который может растягиваться по длине более чем в два раза.

УСТАНОВКА (TNO-4041T/4051T/4041TR)

- Эта камера водонепроницаема и соответствует стандарту IP66, однако штекер внешнего кабеля водонепроницаемым не является. Рекомендуется установить это устройство под карнизом во избежание выступания кабеля наружу.

Меры предосторожности, принимаемые перед установкой

Прежде чем устанавливать камеру, обязательно прочтите приведенные далее инструкции.

- Установку необходимо выполнять в таком месте (на потолке или стене), которое может выдержать вес в пять раз превышающий вес камеры, включая установочный кронштейн.
- Кабели с поврежденной или снятой изоляцией могут стать причиной повреждения устройства или возгорания.
- С целью предосторожности попросите посторонних лиц покинуть место установки. На всякий случай уберите все посторонние личные вещи.
- Не используйте отверстие, предназначенное для подсоединения солнечного козырька, в иных целях.
- Если при установке изделия прилагать чрезмерные усилия, возможно повреждение с нарушением работы камеры. Если с силой устанавливать устройство, пользуясь неподходящими инструментами, возможно повреждение устройства.

Установка

1. С помощью звездообразного ключа отделите PT-кронштейн от основного корпуса.

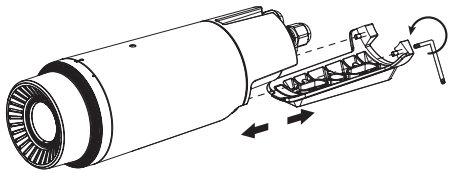

2. Стяните привод PT и PT-кронштейн крепежными винтами через три отверстия, как показано на рисунке.

- Не предоставлен драйвер Пан/Наклона

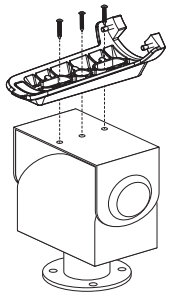

3. С помощью звездообразного ключа скрепите PT-кронштейн и основной корпус.

- Для регулировки положения камеры на кронштейне отверните винты кронштейна, настройте камеру и затяните винты. Если пытаться регулировать положение при затянутых винтах с приложением силы, это может привести к появлению трещин и другим проблемам.

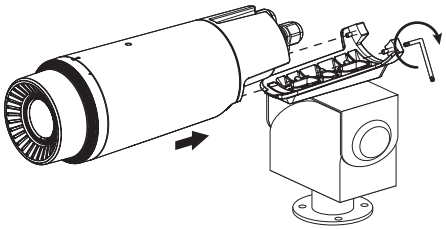

Соединение водонепроницаемого шнура питания и кабеля LAN

1. Оторвите выступающую часть резиновой крышки на нижней стороне нижней крышки, как показано на рис. ниже.

- Для подключаемого кабеля локальной сети используйте соответствующую втулку.
  - Базовая камера: используйте кабель Ø5~6.5.
  - Прилагаемые компоненты: Используйте кабель Ø7~8.5.

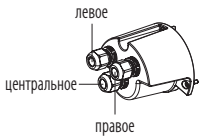

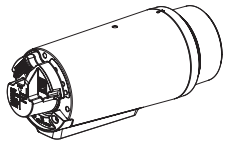

2. Вставьте кабель питания в центральное отверстие, получившееся после удаления выступающей части резиновой заглушки на шаге 1 выше.
3. Соедините шнур питания с клеммником питания.
4. Вставьте кабель локальной сети в правое отверстие, получившееся после удаления выступающей части резиновой заглушки на шаге 1 выше.
5. Удалите оболочку с помощью кабельного резака и выровняйте кабели.
6. Подключите кабель LAN с помощью коннектора LAN и вставьте его в инструмент LAN.
7. Подключите готовый кабель к порту Ethernet.
8. Вставьте кабель соединительного блока в левое отверстие, получившееся после удаления выступающей части резиновой заглушки на шаге 1 выше.

Наружный монтаж

При монтаже этого устройства вне здания, пожалуйста, обеспечьте его водонепроницаемость с помощью водонепроницаемой ленты бутилкаучука (ее можно купить в магазине) так, чтобы вода не протекла в щель кабеля, выведенного наружу.

1. Connectez à des câbles, tels que E / S et audio.
2. Оберните черный кабельный кожух (Зона A) и зону присоединения кабеля водонепроницаемой лентой (бутилкаучук) так, чтобы лента бутилкаучука перекрывалась больше чем на половину.

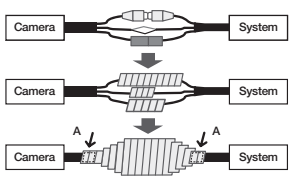

- Если не обеспечена надлежащая водонепроницаемость кабельного кожуха, это может стать причиной течи. Удостоверьтесь, что кабель обмотан толстым слоем ленты.
- Водонепроницаемая лента сделана из бутилкаучука, который может растягиваться по длине более чем в два раза.

УСТАНОВКА/ИЗВЛЕЧЕНИЕ КАРТЫ ПАМЯТИ МИКРО SD

- Перед установкой карты Микро SD отключите кабель питания от камеры.
- Правильно расположенная карта памяти Микро SD вставляется без усилия.
  Принудительная установка карты памяти Микро SD не той стороной может привести к ее повреждению.
- Не рекомендуется вставлять или вынимать карту памяти Микро SD во время дождя или при высокой влажности.

Установка карты памяти Микро SD

Вставьте карту памяти Микро SD в направлении стрелки, как показано на рисунке.

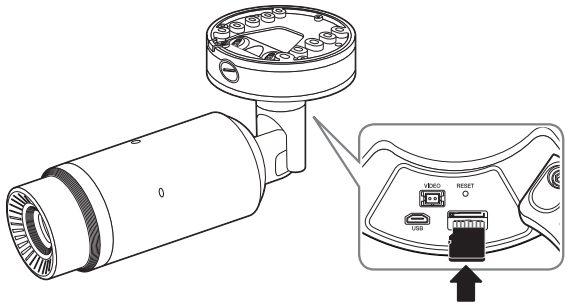

<TNO-4030T/4040T/4050T/4030TR/4040TR/L4030T/L4030TR>

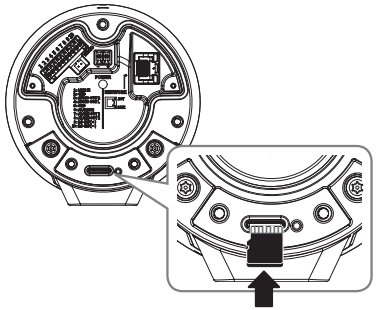

<TNO-4041T/4051T/4041TR>

Извлечение карты памяти Микро SD

Мягко нажмите на выступающий конец карточки как показано на диаграмме, чтобы извлечь карточку из гнезда.

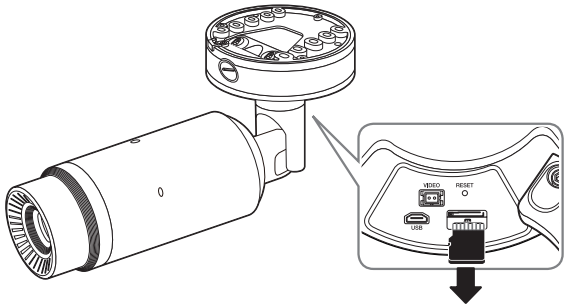

<TNO-4030T/4040T/4050T/4030TR/4040TR/L4030T/L4030TR>

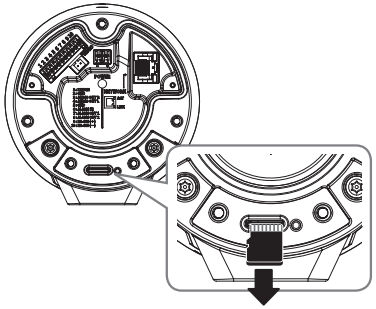

<TNO-4041T/4051T/4041TR>

- При слишком сильном нажатии на карту памяти Микро SD она может “выстрелить” из разъема при отпускании пальца.
- Перед извлечением карты памяти SD в меню <**Накопитель**>, установите устройство в состояние <**Выкл.**>, нажмите кнопку [**Применить**] и выключите камеру.
- Если Вы выключите камеру или извлечете из продукта карту памяти Микро SD, содержащую данные, то эти данные могут быть потеряны или повреждены.

ИНФОРМАЦИЯ О КАРТОЧКЕ ПАМЯТИ (НЕ ВКЛЮЧЕНО)

Что такое карточка памяти?

Карточка памяти - это устройство для внешнего хранения данных, разработанное чтобы обеспечить совершенно новый способ записи и обмена видео, аудио и текстовой информации посредством цифровых устройств.

Выбор наиболее подходящей карточки памяти

Данная камера поддерживает карты памяти Микро SD/SDHC/SDXC.
Могут возникнуть проблемы при использовании карточек других моделей и других производителей.

Для данной камеры рекомендуются карты памяти следующих типов указанных производителей.

- Производитель : SanDisk, Transcend
- Линейка изделий: С длительным сроком службы

Для данной видеокамеры рекомендуется использовать карты памяти емкостью от 16 до 256 Гбайт (типа MLC).

На характеристики воспроизведения может влиять быстродействие карты памяти.

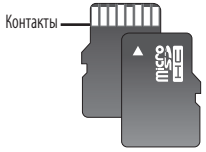

Micro SD/SDHC/SDXC

ПОДКЛЮЧЕНИЕ К ДРУГОМУ УСТРОЙСТВУ

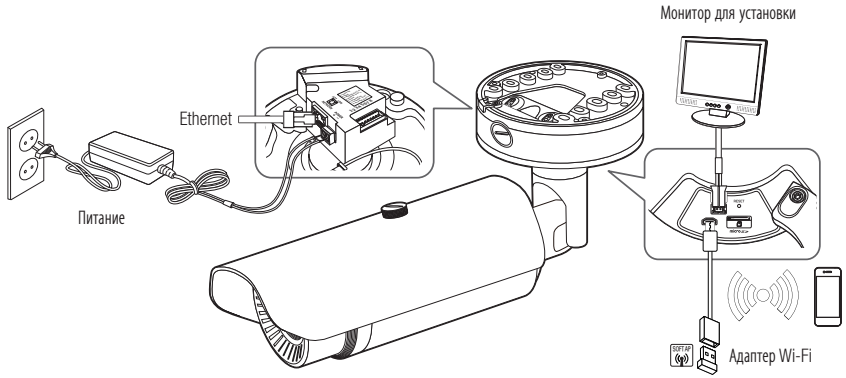

<TNO-4030T/4040T/4050T/4030TR/4040TR/L4030T/L4030TR>

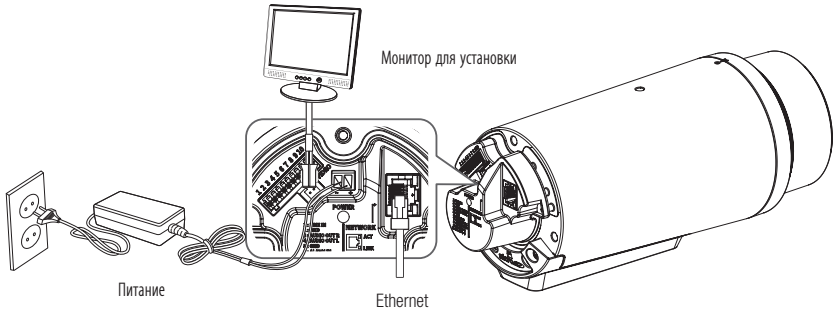

<TNO-4041T/4051T/4041TR>

- Выходной разъем CVBS устройства предназначен для облегчения монтажа и не рекомендуется использовать его для целей мониторинга.
- Выходной разъем Микро USB устройства предназначен для облегчения монтажа и не рекомендуется использовать его для целей мониторинга.
- Если экран “застывает” на 1-2 секунды в определенные интервалы времени, либо когда имеется изменение температуры в окружающей зоне - это нормально; просто происходит процесс калибровки экрана.

Подключение к сети Ethernet

Подключите кабель Ethernet к локальной сети или к Интернету.

Подключение Wi-Fi (TNO-4030T/4040T/4050T/4030TR/4040TR/L4030T/L4030TR)

Настройка камеры

1. Подключите переходник OTG (5-контактный) и аппаратный ключ Wi-Fi к соединителю micro USB.

Smartphone Setup

1. Установите приложение для установки Wisenet.
2. После включения Wi-Fi выберите SSID камеры.
3. Запустите приложение для установки Wisenet.
4. После входа в камеру будет подключено видео.
   - Во время первоначального подключения без входа в систему видео будет воспроизводиться.
5. Угол обзора камеры можно регулировать во время просмотра видео на смартфоне.

Рекомендуемый производитель адаптеров

Производитель	Модель
NETIS	WF2123 n300
EDIMAX	EW-7811Un V2 (Новая версия)
IP Time	N100mini
IP Time	N105L
TP-LINK	TL-WN823N V1
TP-LINK	TL-WN725N
TP-LINK	T2U Nano
ASUS	USB-N13
ASUS	USB-N10 NANO
NETGEAR	WNA3100M
IODATA	WN-G150UMW
IODATA	WN-S150UM
TOTOLINK	N300UM

Источник питания

Подключите все провода кабеля питания (+, –) к соответствующему порту камеры с помощью отвертки.

- При одновременной подаче питания PoE и 12 В постоянного тока либо PoE и 24 В переменного тока оборудование будет использовать питание от внешнего источника (переменный ток 24 В, постоянный ток 12 В).
  - Также для подачи питания к видеокамере используется маршрутизатор с поддержкой PoE.
  - Применяемая технология PoE должна быть совместима с протоколами IEEE 802.3af.
  - Для питания оборудования рекомендуется использовать один источник из следующих: PoE, постоянный ток 12 В, переменный ток 24 В.
- Подключая кабель питания, будьте очень внимательны, чтобы не перепутать полярность.
- После первоначальной подачи питания требуется время для стабилизации экрана. По этой причине калибровка экрана выполняется при первом включении.
- Если необходимо подключить внешнее устройство, перед началом работы его необходимо выключить.
- Сначала соедините устройство и шнур адаптера питания, а затем включите кабель питания в стенную розетку.

Спецификация на силовой кабель для каждой модели

Входная мощность	Тип проводов (AWG)	Длина кабеля (макс.)
DC 12V	#18	19m
	#16	30m
AC 24V	#20	26m
	#18	40m

Спецификация сетевого кабеля

Пункт	Содержание	Примечание
Разъем	RJ45	
Ethernet	10/100Base-T	10/100 Mbps
Кабель	UTP категории 5e	
Макс. расстояние	100 м	
Поддержка питания по Ethernet	IEEE 802.3af	

Подсоединение звукового ввода/вывода

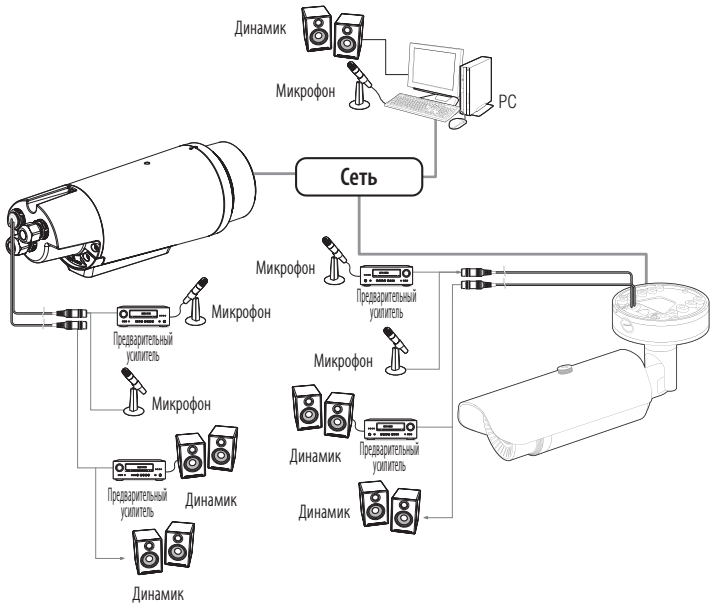

1. Подключите микрофон к порту AUDIO IN камеры или соедините порты AUDIO IN и LINE OUT усилителя, к которому подсоединен микрофон.
2. Подключите динамик к порту AUDIO OUT камеры или соедините порты AUDIO OUT и LINE OUT усилителя, к которому подсоединен динамик.
3. Проверьте характеристики для аудиовхода.

- **Аудиокодек**
  - Аудио вход : G.711 PCM (скорость передачи: 64кбит/с / частота дискретизации: 8кГц), G.726 АДИКДМ (скорость передачи: 16кбит/с , 24кбит/с , 32кбит/с , 40кбит/с / частота дискретизации: 8кГц), AAC (скорость передачи: 48кбит/с / частота дискретизации: 16кГц)
  - Аудио выход : G.711 PCM (скорость передачи: 64кбит/с / частота дискретизации: 8кГц)
- **Дуплексное аудио**
- **Звуковой вход** : Выбираемый (микрофон/линейный вход), поддерживаемое напряжение: 2,5 В постоянного тока (4 мА), входное сопротивление: 2 кОм
- **Звуковой выход** : Линейный выход (монофонический штекер 3,5 мм), максимальный сигнал: 1 В (действующее значение)
- **Сопротивление выходного канала Line out :** 600 Ом

Подключение к блоку портов ввода-вывода

Подсоедините кабель ввода/вывода сигнала тревоги к соответствующему порту платы.

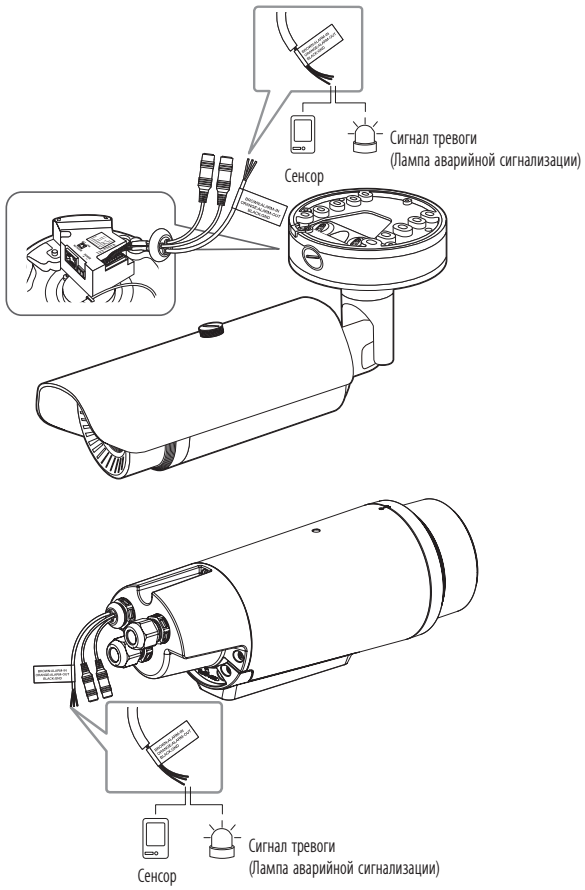

- ALARM-IN : Используется для подключения сенсора входного сигнала тревоги или наружного сенсора день/ночь.
- ALARM-OUT : Используется для передачи выходных сигналы тревоги.
- GND : Общий порт для ввода/вывода тревожной сигнализации.

- Если устройства (например, проблесковый световой маяк или сирена), превышающие допустимый уровень напряжение и тока, указанный в технических спецификациях, подсоединяются при помощи метода открытого коллектора, это может привести к сбою. При подключении устройств, напряжение и ток которых превышают значения, указанные в спецификации, см. Раздел «**Монтажная диаграмма выхода тревоги**».

Настройка RS-485 (TNO-4041T/4051T/4041TR)

Все перечисленные выше функции будут доступны, только если сетевая камера правильно подключена к ресиверу с поддержкой функций панорамирования/наклона. Кроме того, для функций панорамирования/наклона необходимо правильно указать последовательный порт.

- Проверьте функции, поддерживаемые приемником, если он подсоединен. Некоторые функции могут быть отключены в зависимости от характеристики приемника и протокола. См. следующую таблицу для получения более подробной информации.

Функции, поддерживаемые для каждого протокола

Протокол	Управление P	Скорость движения P	Управление T	Скорость движения T	Предустановка	Примечания
SAMSUNG-T	O	O (1~6)	O	O (1~6)	O	
PELCO-D	O	O (1~6)	O	O (1~6)	O	
PELCO-P	O	O (1~6)	O	O (1~6)	O	
SUNGJIN	O	X	O	X	O	Направление PT (Вверх, вниз, влево, вниз)
PANASONIC	O	O (1~6)	O	O (1~6)	O	
HONEYWELL	O	O (1~6)	O	O (1~6)	O	
AD	O	O (1~6)	O	O (1~6)	O	
VICON	O	O (1~6)	O	O (1~6)	O	
GE	O	O (1~6)	O	O (1~6)	O	
BOSCH	O	O (1~6)	O	O (1~6)	X	

Подключение к внешнему датчику

Подсоедините один провод двухпроводного кабеля датчика к порту [**ALARM IN**], а другой провод - к порту [**GND**].

Монтажная схема входа тревоги

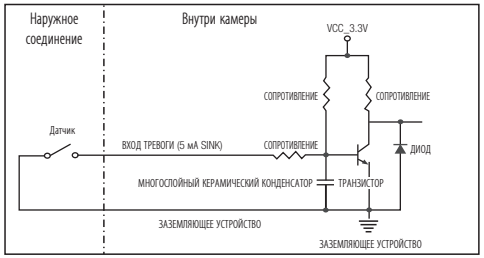

Монтажная диаграмма выхода тревоги

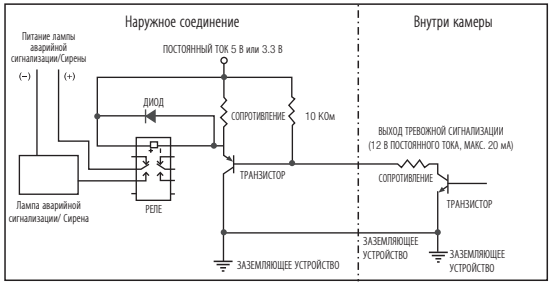

Можно выставить сетевые настройки согласно сетевой конфигурации.

ПОДКЛЮЧЕНИЕ КАМЕРЫ НАПРЯМУЮ К ЛОКАЛЬНОЙ СЕТИ

Подключение к камере через локальный ПК в локальной сети

1. Запустите Интернет-браузер на локальном ПК.
2. Введите адрес IP-роутера в адресной строке браузера.

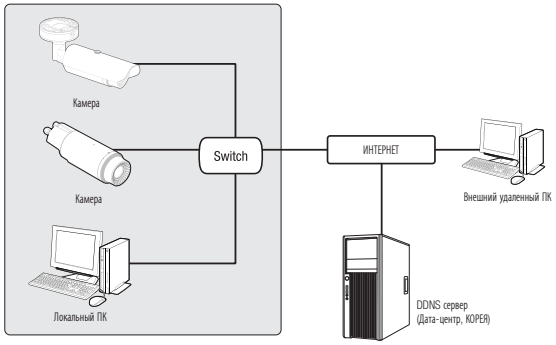

<Локальная сеть>

- Удаленный ПК во внешней сети или в Интернете не может подключиться к камере, установленной в интранет, если не задана правильная переадресация портов или установлен файрвол.
  В этом случае обратитесь к системному администратору для устранения проблемы.
- В Device Manager для установки IP-адреса, маски подсети, шлюза, порта HTTP, порта VNP и типа IP можно использовать исходный пароль «**4321**». Для лучшей защиты после изменения сетевого интерфейса войдите в web viewer и поменяйте пароль.
- Согласно заводским настройкам по умолчанию, IP-адрес назначается сервером DHCP автоматически. Если сервер DHCP отсутствует, будет задан следующий IP-адрес: 192.168.1.100.
  Чтобы изменить IP-адрес, нужно использовать Device Manager.
  Для получения дополнительной информации об использовании Device Manager см. раздел «**Использование Device Manager**». (Стр. 20)

ПРЯМОЕ ПОДКЛЮЧЕНИЕ КАМЕРЫ К МОДЕМУ DSL/КАБЕЛЬНОМУ МОДЕМУ С ПОДДЕРЖКОЙ ПРОТОКОЛА DHCP

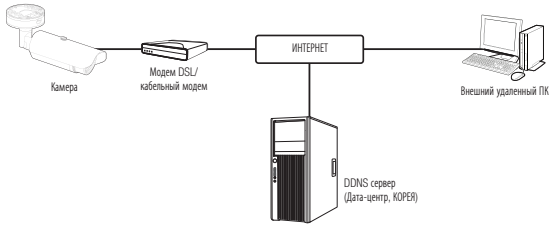

1. Подсоедините напрямую ПК пользователя с сетевой камерой.
2. Запустите Device Manager и измените IP-адрес камеры, чтобы можно было для подключения к Интернету использовать веб-браузер вашего компьютера.
3. Установите подключение к интерактивной программе просмотра в веб-браузере.
4. Перейдите на страницу [**Настройка**].
5. Перейдите на страницу [**Сеть**] - [**DDNS**] и настройте параметры DDNS.
6. Перейдите по меню [**Basic**] - [**IP & Порт**] и задайте тип IP для [**DHCP**].
7. Подсоедините камеру, отключенную от ПК, непосредственно к модему.
8. Перезапустите камеру.

- За информацией об установке DDNS обратитесь к онлайновой справке программы Web Viewer.
- За информацией о задании формата IP-адреса обратитесь к онлайновой справке программы Web Viewer.

ПОДКЛЮЧЕНИЕ КАМЕРЫ НАПРЯМУЮ К МОДЕМУ PPPoE

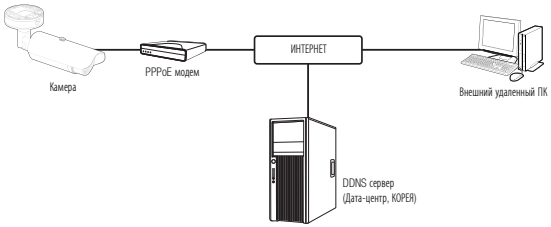

1. Подсоедините напрямую ПК пользователя с сетевой камерой.
2. Запустите Device Manager и измените IP-адрес камеры, чтобы можно было для подключения к Интернету использовать веб-браузер вашего компьютера.
3. Установите подключение к интерактивной программе просмотра в веб-браузере.
4. Перейдите на страницу [**Настройка**].
5. Перейдите на страницу [**Сеть**] - [**DDNS**] и настройте параметры DDNS.
6. Перейдите по меню [**Basic**] - [**IP & Порт**] на страницу настроек, задайте тип IP для [**PPPoE**] и введите ID и пароль сетевой службы.
7. Подсоедините камеру, отключенную от ПК, непосредственно к модему.
8. Перезапустите камеру.

- За информацией об установке DDNS обратитесь к онлайновой справке программы Web Viewer.
- За информацией о задании формата IP-адреса обратитесь к онлайновой справке программы Web Viewer.

ПОДКЛЮЧЕНИЕ КАМЕРЫ К ШИРОКОПОЛОСНЫЙ МАРШРУТИЗАТОР ЧЕРЕЗ PPPoE/КАБЕЛЬНЫЙ МОДЕМ

Используется в небольших сетях внутри домов, в маленьких офисах и обычных магазинах.

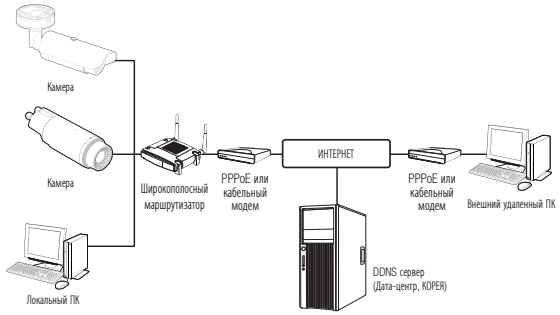

Настройка сетевых параметров локального ПК, подключенного к Широкополосный маршрутизатор

При настройке сетевых параметров локального ПК, подключенного к Широкополосный маршрутизатор, руководствуйтесь нижеследующей инструкцией.

- Выберите : <**Network**> → <**Properties**> → <**Local Area Connection**> → <**General**> → <**Properties**> → <**Internet Protocol (TCP/IP)**> → <**Properties**> → <**Obtain an IP address automatically**> или <**Use the following IP address**>.
- Следуйте данным инструкциям, если было выбрано <**Use the following IP address**>:

пр1) Если адрес (LAN IP) Широкополосный маршрутизатор 192.168.1.1
IP-адрес : 192.168.1.100
Маска подсети : 255.255.255.0
Основной шлюз : 192.168.1.1

пр2) Если адрес (LAN IP) Широкополосный маршрутизатор 192.168.0.1
IP-адрес : 192.168.0.100
Маска подсети : 255.255.255.0
Основной шлюз : 192.168.0.1

пр3) Если адрес (LAN IP) Широкополосный маршрутизатор 192.168.xxx.1
IP-адрес : 192.168.xxx.100
Маска подсети : 255.255.255.0
Основной шлюз : 192.168.xxx.1

- Чтобы узнать адрес Широкополосный маршрутизатор, обратитесь к документации изделия.
- Дополнительную информацию о переадресации портов на широкополосном маршрутизаторе см. в разделе "**Настройка Переадресации Диапазона Портов (Распределение Портов)**". (Стр. 22)

ИСПОЛЬЗОВАНИЕ DEVICE MANAGER

- Программу Device Manager можно загрузить с веб-сайта Hanwha Vision через меню <**Служба поддержки**> – <**Online Tool**>. (https://www.HanwhaVision.com)
- Дополнительные инструкции по Device Manager можно найти в меню <**Справка**> главной страницы.

АВТОМАТИЧЕСКИЙ ПОИСК КАМЕРЫ

Если камера подключена к той же сети, что и ПК, на котором установлен Device Manager, можно найти такую сетевую камеру с помощью функции поиска.

1. Нажмите <**Search (Поиск)**> на главной странице Device Manager.
2. В открывшемся списке выберите нужную камеру.
   - Проверьте MAC-адрес на наклейке, прикрепленной к камере.

НАСТРОЙКА IP-АДРЕСА

Чтобы изменить сетевые настройки камеры, в поле <**Status (Состояние)**> должен отображаться значок <**Login OK (Вход OK)**>. Чтобы войти ы систему, на главной странице нажмите <**Authentication (Аутентификация)**>.

Настройка статического IP

Вручную ведите IP-адрес и информацию о порте.

1. Выберите из списка камеру, у которой нужно изменить параметры IP.
2. Нажмите кнопку <**IP Assign (Назначить IP)**> на главной странице Device Manager.
3. Выберите <**Assign the following IP address (Назначить следующий IP-адрес)**>.
   - В данных параметров IP камеры будут отображаться введенные значения.
4. Заполните категории IP-адреса и порта.

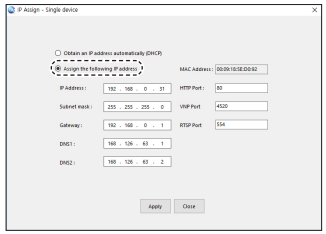

В случае отсутствияШирокополосный маршрутизатор

Попросите сетевого администратора выдать вам значения <**IP Address (IP-адрес)**>, <**Subnet Mask (Маска подсети)**>, <**Gateway (Шлюз)**>.

- HTTP Port : Используется для получения доступа к камере через веб-обозреватель. Значение по умолчанию - 80.
- VNP Port : используется для управления передачей видеосигнала. Значение по умолчанию - 4520.
- RTSP Port: Порт, который управляет потоковой передачей в реальном времени. По умолчанию установлено значение 554.

В случае использованияШирокополосный маршрутизатор

- IP Address : введите адрес, который соответствует IP-диапазону, заданному Широкополосный маршрутизатор.
  пр) 192.168.1.2~254, 192.168.0.2~254,
  192.168.XXX.2~254
- Subnet Mask : параметр <**Subnet Mask**> Широкополосный маршрутизатор соответствует параметру <**Subnet Mask**> камеры.
- Gateway : параметр <**Local IP Address**> Широкополосный маршрутизатор соответствует параметру <**Gateway**> камеры.

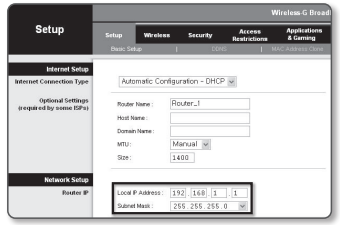

- Параметры могут различаться в зависимости от модели Широкополосный маршрутизатор.
  Для получения дополнительных сведений см. руководство пользователя соответствующего маршрутизатора.
- Дополнительную информацию о переадресации портов на широкополосном маршрутизаторе см. в разделе "**Настройка Переадресации Диапазона Портов (Распределение Портов)**". (Стр. 22)

Если к Широкополосный маршрутизатор подключено несколько камер

Настройте параметры, связанные с IP-адресом и портами, в соответствии друг с другом.

пр)

Категория		Камера №1	Камера №2
Настройки, связанные с IP	IP Address Subnet Mask Gateway	192.168.1.100 255.255.255.0 192.168.1.1	192.168.1.101 255.255.255.0 192.168.1.1
Настройки, связанные с портами	Порт HTTP Порт VNP Порт RTSP	8080 4520 554	8081 4521 555

- Если для параметра <**HTTP Port**> выбрано значение свыше 80, необходимо указать номер <**Port**> в адресной строке веб-обозревателя, прежде чем получить доступ к камере.
  пр) http://IP-адрес : Порт HTTP
  http://192.168.1.100:8080

5. Нажмите кнопку [**Применить**].
6. Если появится сообщение об успешной настройке, нажмите [**OK**].

Настройка динамического IP-адреса

Получите IP-адрес от DHCP

- Примеры динамического IP-окружения
  - Сервер DHCP назначает IP-адрес Широкополосный маршрутизатор с подключенными камерами.
  - Прямое подключение камеры к модему с помощью протоколов DHCP
  - Внутренний сервер DHCP назначает IP-адреса по локальной сети.

1. Выберите из списка камеру, у которой нужно изменить параметры IP.
2. Нажмите кнопку <**IP Assign (Назначить IP)**> на главной странице Device Manager.
3. Выберите <**Obtain an IP address automatically (DHCP) (Получить IP-адрес автоматически (DHCP))**>.
4. Нажмите кнопку [**Apply (Применить)**].
5. Если появится сообщение об успешной настройке, нажмите [**OK**].

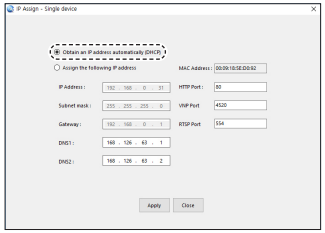

РЕГИСТРАЦИЯ КАМЕРЫ ВРУЧНУЮ

Если не удается найти камеру с помощью функции поиска (если камера подключена к внешней сети), ее можно зарегистрировать удаленно, введя ее параметры IP вручную.

1. На главной странице Device Manager нажмите <**Add Devices (Добавить устройства)**> – <**Manually Add Device (Добавить устройство вручную)**>.
2. Введите нужный диапазон IP-адресов.
3. Выберите <**Model Name (имя модели)**> камеры, которую нужно зарегистрировать, и введите данные о порте HTTP, порте VNP, идентификатор и пароль.
4. Нажмите кнопку [**Register (Зарегистрировать)**].
5. Проверьте, зарегистрировалась ли камера.
   - Проверьте MAC-адрес на наклейке, прикрепленной к камере.

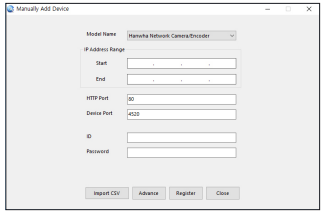

АВТОМАТИЧЕСКАЯ НАСТРОЙКА IP

1. Выберите из списка камеру, для которой необходимо автоматически настроить параметры IP.
2. На главной странице Device Manager нажмите < **+** >.
   - Появится меню настроек оборудования.
3. Выберете в меню <**Auto IP Configure (Автоматическая настройка IP)**>.
4. Нажмите кнопку [**Close (Закрыть)**].

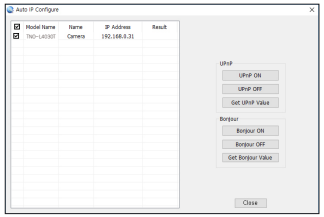

НАСТРОЙКА ПЕРЕАДРЕСАЦИИ ДИАПАЗОНА ПОРТОВ (РАСПРЕДЕЛЕНИЕ ПОРТОВ)

После установки Широкополосный маршрутизатор с подключенными камерами необходимо настроить для него переадресацию диапазона портов, чтобы с удаленного компьютера можно было получить доступ к подключенным камерам.

Переадресации диапазона портов вручную

1. В меню настроек Широкополосный маршрутизатор выберите <**Applications & Gaming**> - <**Port Range Forward**>.
   Сведения о настройке переадресации диапазона портов для Широкополосный маршрутизатор стороннего производителя см. в его руководстве пользователя.
2. Выберите <**TCP**> и <**UDP Port**> для каждой камеры, подключенной к Широкополосный маршрутизатор. Номер каждого из портов, конфигурируемых в IP-маршрутизаторе, следует устанавливать в соответствии с номером, назначенным в пункте меню <**Настройка**> - <**Basic**> - <**IP & Порт**> в Web viewer камеры.
3. Затем нажмите кнопку [**Save Settings**].
   Заданные настройки будут сохранены.

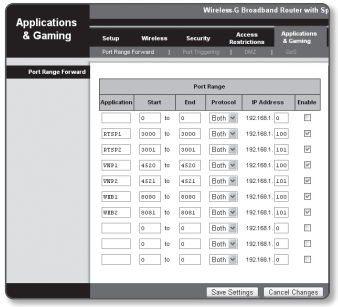

- Настройка переадресации портов является примером настройки IP-маршрутизатора CISCO.
- Параметры могут различаться в зависимости от модели Широкополосный маршрутизатор.
  Для получения дополнительных сведений см. руководство пользователя соответствующего маршрутизатора.

Настройка переадресации диапазона портов для нескольких сетевых камер

- Правило переадресации порта для Широкополосный маршрутизатор можно задать с веб-страницы его настроек.
- С помощью экрана настройки камеры можно изменить все порты.

Когда камера 1 и камера 2 подключены к маршрутизатору:

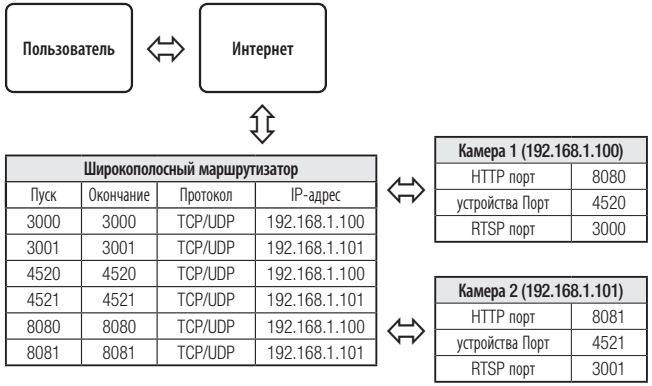

- Переадресация портов выполняется без дополнительной настройки роутера, если роутер поддерживает функцию UPnP (включи и работай).
  После соединения с сетевой камерой установите из меню <**Быстрое соединение**> флажок <**DDNS**> в пункте "**Настройки** -> **Сеть** -> **DDNS**".

ПОДКЛЮЧЕНИЕ К КАМЕРЕ С ЛОКАЛЬНОГО КОМПЬЮТЕРА ОБЩЕГО ДОСТУПА

1. Запустите Device Manager.
   Она выполнить поиск подключенных камер и составит список найденных.
2. Дважды щелкните нужную камеру, чтобы получить к ней доступ.
   Запустится веб-обозреватель и подключится к выбранной камере.

- Получить доступ к найденной камере можно и другим способом: просто введите IP-адрес камеры в адресную строку веб-обозревателя.

ПОДКЛЮЧЕНИЕ К КАМЕРЕ С УДАЛЕННОГО КОМПЬЮТЕРА ЧЕРЕЗ ИНТЕРНЕТ

На удаленном компьютере, который не входит в сетевой кластер широкополосного маршрутизатора, пользователи не могут получить доступ к камерам в сети широкополосного маршрутизатора, используя URL-адрес DDNS конкретной камеры.

1. Прежде чем получить доступ к камере в сети Широкополосный маршрутизатор, необходимо настроить переадресацию диапазона портов для Широкополосный маршрутизатор.
2. На удаленном компьютере запустите веб-обозреватель и введите DDNS URL-адрес камеры или IP-адрес Широкополосный маршрутизатор в адресную строку.
   пр) http://ddns.hanwha-security.com/ID

- Чтобы использовать DDNS, зарегистрируйтесь на домашней странице DDNS (http://ddns.hanwha-security.com) и зарегистрируйте продукт через меню [**Мой DDNS**]> [**Зарегистрировать продукт**].

ПОДКЛЮЧЕНИЕ К КАМЕРЕ

Обычный порядок действий

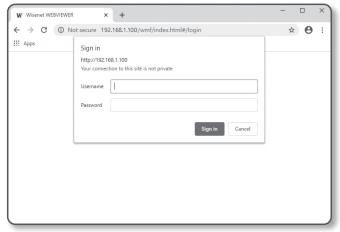

1. Запустите веб-обозреватель.
2. Введите IP-адрес камеры в адресную строку.
   пр) • IP-адрес (IPv4) : 192.168.1.100
   → http://192.168.1.100
   - появится диалоговое окно входа.
   • IP-адрес (IPv6) : 2001:230:abcd: ffff:0000:0000:ffff:1111
   → http://[2001:230:abcd:ffff:0000:0000:ffff:1111] - появится диалоговое окно входа.

Номер порта HTTP отличен от 80

1. Запустите веб-обозреватель.
2. Введите IP-адрес и номер порта HTTP камеры в адресную строку.
   пр) IP-адрес: 192.168.1.100: номер порта HTTP(8080)
   → http://192.168.1.100:8080 - появится диалоговое окно входа.

Использование URL-адреса

1. Запустите веб-обозреватель.
2. Введите DDNS URL-адрес камеры в адресную строку.
   пр) URL-адрес: http://ddns.hanwha-security.com/ID
   - появится диалоговое окно входа.

- Сетевое подключение выключено только в среде LAN.

Просмотр DDNS-адреса

Если камера подключена напрямую к кабельному модему DHCP, модему DSL или модему PPPoE, то IP-адрес вашей сети будет изменяться при каждом подключении к серверу поставщика услуг Интернета. В этом случае вам не будет сообщаться об изменении IP-адреса, выполненном DDNS.

Если вы зарегистрируете устройство с динамическим IP-адресом на сервере DDNS, то во время доступа к этому устройству вы всегда можете проверить, как изменился его IP-адрес.
Чтобы зарегистрировать устройство на сервере <**DDNS**>, посетите веб-сайт http://ddns.hanwha-security.com Сначала зарегистрируйте камеру, а затем задайте <**Сеть**> - <**DDNS**> для <**DDNS**> в программе Web Viewer, а также укажите <**Код продукта**>, который использовался для регистрации DDNS.

УСТАНОВКА ПАРОЛЯ

Когда доступ к продукту выполняется первый раз, необходимо зарегистрировать пароль входа в систему.

- Для нового пароля от 8 до 9 символов, необходимо использовать не менее 3 символов из числа следующих: строчные/прописные буквы, цифры и специальные символы. Для пароля от 10 до 15 символов необходимо использовать не менее 2 типов указанных символов.
  - Допускаются следующие специальные символы : ~`!@#$%^&*( )_-+={ }[ ]|\;:'"<>.,?/
- В пароле пробелы использовать нельзя.
- Для лучшей защиты пароля не рекомендуется повторять одинаковые символы либо символы, последовательно расположенные на клавиатуре.
- При утрате пароля можно нажать кнопку [**RESET**] для инициализации продукта. Не теряйте пароль, сохраните его в записной книжке или запомните.

ВХОД

При каждом доступе к камере будет появляться окно входа.
Укажите идентификатор пользователя и пароль для доступа к камере.

1. Введите “**admin**” в поле ввода <**User Name**>.
   ID администратора (**admin**) можно изменить в Web Viewer.
2. Введите пароль в поле ввода <**Password**>.
3. Нажмите кнопку [**OK**].
   После входа в систему отобразится экран интерактивной программы просмотра.

- При доступе к камере через модуль Web viewer уделите внимание безопасности и проверьте, зашифрованы ли данные, содержащие изображение.

- Лучшее качество видео обеспечивается при размере экрана 100%. При уменьшении экрана изображение может быть обрезано по краям.

НАСТРОЙКА WEB VIEWER

1. Щелкните по значку [**Настройка (⚙)**].
2. Откроется окно настроек.
3. Можно задать по локальной сети базовую информацию о камере, а также настройки видео, аудио, локальной сети, событий, анализа и системы.
4. Выберите <**Справка (?)**> для просмотра подробного описания каждой функции.

ПОИСК И УСТРАНЕНИЕ НЕПОЛАДОК

ПРОБЛЕМА	РЕШЕНИЕ
Если пользователь Windows 10 получает доступ к Web viewer через Chrome или Firefox, громкость микрофона периодически изменяется.	• Это происходит, когда для микрофона установлен драйвер Realtek. Установите в качестве драйвера микрофона драйвер Windows по умолчанию для звукового устройства с поддержкой High Definition Audio, либо драйвер стороннего поставщика.
Если доступ производится через подключаемый программный модуль Free webviewer на Safari через HTTPS, видео не отображается.	• При первоначальном доступе к https во всплывающем окне с предложением аутентификации выберите "Просмотр сертификата подлинности" и установите флажок "Всегда доверять при соединении по IP, назначенному программе веб-просмотра". • Если модуль веб-просмотра по-прежнему не отображает видео после выбора "Далее" в окне сообщения внизу, намжите командную кнопку + Q, чтобы выйти из браузера Safari, вновь войдите в систему и следуйте процедуре, приведенной выше.
Нет доступа к камере через веб-браузер.	• Проверьте на правильность сетевые настройки камеры. • Убедитесь в правильности подключения всех сетевых кабелей. • Убедитесь в том, что камера получает динамический IP-адрес при использовании DHCP-технологии. • Если камера подключена к Широкополосный маршрутизатор, убедитесь в том, что переадресация портов настроена правильно.
Происходит разрыв соединения по время мониторинга видео в экране просмотра.	• При любом изменении настроек камеры или сети происходит разрыв соединения с наблюдательными терминалами. • Проверьте все сетевые соединения. • Может произойти разрыв соединения при плохой связи, если камера подключена к PPPoE.
Подключенная к сети камера не обнаружена в программе Device Manager.	• Отключите файрвол на своем ПК и заново запустите поиск камеру.
Картинки перекрываются.	• Убедитесь в том, что две или более камеры не транслируют данные на один и тот же multicast-адрес. Картинки могут перекрываться, если один адрес используется несколькими камерами.
Нет картинки.	• Если задан метод передачи на группу адресов, убедитесь, что в локальной сети, к которой подключена камера, есть роутер, поддерживающий технологию multicast.

ПРОБЛЕМА	РЕШЕНИЕ
Голос не записывается, даже если заданы настройки входа аудио.	• Необходимо установить флажок <Аудио вход> в меню <Basic> - <Профиль видео>.
<Детектор движения> в меню <Аналитика> установлено в <Активировать>, но уведомления по электронной почте не приходят, даже когда произошло событие аналитики.	• Проверьте настройки в следующей последовательности: A. Проверьте настройки параметра <Дата и время>. B. Для параметра <Детектор движения> необходимо задать значение <Активировать>. C. Проверьте, выбран ли в меню <Настройка событий> параметр <Настройка событий>.
Сигнал тревоги не выводится на соответствующий порт даже при регистрации события анализа интеллектуального видео.	• Проверьте настройки для выходных портов сигналов.
Не удается записать данные на карту памяти Micro SD.	• Проверьте, исправна ли карта памяти. • Замена карты Micro SD должна производиться, когда питание устройства отключено.
Карта памяти Micro SD установлена, однако камера работает неверно.	• Проверьте, в правильном ли направлении вставлена карта памяти. Возможность использования карт памяти, отформатированных на других устройствах, не гарантируется. • Снова отформатируйте карту памяти в меню <Настройка> ➞ <Событие> ➞ <Накопитель>.
Не удается произвести запись в NAS.	• Убедитесь в том, что информация, зарегистрированная в NAS, указана верно.
Это сообщение о том, что настройка NAS не удалась.	• Убедитесь в том, что IP-адрес NAS введен правильно. • Убедитесь в том, что ID/пароль NAS введены правильно. • Убедитесь в том, что доступ к папке, установленной в качестве основной папки с использованием ID номера NAS, открыт. • Убедитесь в том, что с элементов NAS SMB/CIFS сняты флажки (выделения). • Убедитесь в том, что IP-адрес NAS и IP-адрес камеры имеют одинаковый формат. Ex) Начальное значение маски подсети для NAS и камеры 255.255.255.0. Если IP-адрес 192.168.20.32, то IP-адрес NAS должен быть в диапазоне 192.168.20.1~ 192.168.20.255. • Проверьте, не осуществлялась ли попытка получения доступа под другим пользователем без форматирования основной папки (сохраненной или используемой). • Убедитесь в том, что используется рекомендуемое оборудование NAS.
Некоторые шумы могут быть видны на экране.	• В силу особенностей работы тепловизионной камеры ей необходимо время на стабилизацию после включения, в течение которого на экране могут быть видны помехи, которые затем исчезнут (примерно через 30 минут). Может потребоваться больше времени в зависимости от особенностей детектора.

OPEN SOURCE ANNOUNCEMENT

GPL/LGPL software license

The software included in this product contains copyrighted software that is licensed under the GPL/LGPL. You may obtain the complete Corresponding Source code from us for a period of three years after our last shipment of this product by sending email to help.cctv@hanwha.com

If you want to obtain the complete Corresponding Source code in the physical medium such as CD-ROM, the cost of physically performing source distribution might be charged.

GPL SW

Component Name	License	URL
Base Kernel	GPL 2.0	
Busybox	GPL 2.0	http://www.busybox.net/downloads/snapshots
iproute2-4.3.0	GPL 2.0	
iptables-1.4.21	GPL 2.0	http://ftp.netfilter.org/pub/iptables
ethtool-4.2	GPL 2.0	
mtd-1.5.2	GPL 2.0	ftp://ftp.infradead.org/pub/mtd-utils
mii-diag-2.11	GPL 2.0	
rp-pppoe-3.11	GPL 2.0	http://www.roaringpenguin.com/pppoe/
wpa_supplicant-2.5	GPL 2.0	
bash-4.3.30	GPL 3.0	
zeroconf	GPL 2.0	

LGPL SW

Component Name	License	URL
gLibc	LGPL 2.0	
Inetutils	LGPL 3.0	
neon-0.29.6	LGPL 2.0	http://www.webdav.org/neon/

GNU GENERAL PUBLIC LICENSE

Version 2, June 1991

Copyright (C)1989, 1991 Free Software Foundation, Inc. 51 Franklin Street,Fifth Floor, Boston, MA 02110-1301, USA

Everyone is permitted to copy and distribute verbatim copies of this license document, but changing it is not allowed.

Preamble

The licenses for most software are designed to take away your freedom to share and change it. By contrast, the GNU General Public License is intended to guarantee your freedom to share and change free software-- to make sure the software is free for all its users. This General Public License applies to most of the Free Software Foundation's software and to any other program whose authors commit to using it. (Some other Free Software Foundation software is covered by the GNU Lesser General Public License instead.) You can apply it to your programs, too. When we speak of free software, we are referring to freedom, not price. Our General Public Licenses are designed to make sure that you have the freedom to distribute copies of free software (and charge for this service if you wish), that you receive source code or can get it if you want it, that you can change the software or use pieces of it in new free programs ; and that you know you can do these things.

To protect your rights, we need to make restrictions that forbid anyone to deny you these rights or to ask you to surrender the rights. These restrictions translate to certain responsibilities for you if you distribute copies of the software, or if you modify it.

For example, if you distribute copies of such a program, whether gratis or for a fee, you must give the recipients all the rights that you have.

You must make sure that they, too, receive or can get the source code. And you must show them these terms so they know their rights. We protect your rights with two steps :

(1)copyright the software, and (2)offer you this license which gives you legal permission to copy, distribute and/or modify the software. Also, for each author's protection and ours, we want to make certain that everyone understands that there is no warranty for this free software. If the software is modified by someone else and passed on, we want its recipients to know that what they have is not the original, so that any problems introduced by others will not reflect on the original authors' reputations.

Finally, any free program is threatened constantly by software patents. We wish to avoid the danger that redistributors of a free program will individually obtain patent licenses, in effect making the program proprietary. To prevent this, we have made it clear that any patent must be licensed for everyone's free use or not licensed at all. The precise terms and conditions for copying, distribution and modification follow.

TERMS AND CONDITIONS FOR COPYING, DISTRIBUTION AND MODIFICATION

Version 2, June 1991 Copyright (C) 1989, 1991 Free Software Foundation, Inc. 51 Franklin S

0. This License applies to any program or other work which contains a notice placed by the copyright holder saying it may be distributed under the terms of this General Public License.

The "Program", below, refers to any such program or work, and a "work based on the Program" means either the Program or any derivative work under copyright law : that is to say, a work containing the Program or a portion of it, either verbatim or with modifications and/or translated into another language. (Hereinafter, translation is included without limitation in the term "modification".) Each licensee is addressed as "you".
Activities other than copying, distribution and modification are not covered by this License ; they are outside its scope. The act of running the Program is not restricted, and the output from the Program is covered only if its contents constitute a work based on the Program (independent of having been made by running the Program). Whether that is true depends on what the Program does.

1. You may copy and distribute verbatim copies of the Program's source code as you receive it, in any medium, provided that you conspicuously and appropriately publish on each copy an appropriate copyright notice and disclaimer of warranty; keep intact all the notices that refer to this License and to the absence of any warranty ; and give any other recipients of the Program a copy of this License along with the Program.
You may charge a fee for the physical act of transferring a copy, and you may at your option offer warranty protection in exchange for a fee.

2. You may modify your copy or copies of the Program or any portion of it, thus forming a work based on the Program, and copy and distribute such modifications or work under the terms of Section 1 above, provided that you also meet all of these conditions :

a) You must cause the modified files to carry prominent notices stating that you changed the files and the date of any change.

b) You must cause any work that you distribute or publish, that in whole or in part contains or is derived from the Program or any part thereof, to be licensed as a whole at no charge to all third parties under the terms of this License.

c) If the modified program normally reads commands interactively when run,you must cause it, when started running for such interactive use in the most ordinary way, to print or display an announcement including an appropriate copyright notice and a notice that there is no warranty (or else, saying that you provide a warranty) and that users may redistribute the program under these conditions, and telling the user how to view a copy of this License. (Exception:if the Program itself is interactive but does not normally print such an announcement, your work based on the Program is not required to print an announcement.)

These requirements apply to the modified work as a whole. If identifiable sections of that work are not derived from the Program, and can be reasonably considered independent and separate works in themselves, then this License, and its terms, do not apply to those sections when you distribute them as separate works. But when you distribute the same sections as part of a whole which is a work based on the Program, the distribution of the whole must be on the terms of this License, whose permissions for other licensees extend to the entire whole, and thus to each and every part regardless of who wrote it.

Thus, it is not the intent of this section to claim rights or contest your rights to work written entirely by you ; rather, the intent is to exercise the right to control the distribution of derivative or collective works based on the Program. In addition, mere aggregation of another work not based on the Program with the Program (or with a work based on the Program)on a volume of a storage or distribution medium does not bring the other work under the scope of this License.

3. You may copy and distribute the Program (or a work based on it, under Section 2)in object code or executable form under the terms of Sections 1 and 2 above provided that you also do one of the following :

a) Accompany it with the complete corresponding machine-readable source code, which must be distributed under the terms of Sections 1 and 2 above on a medium customarily used for software interchange ; or,

b) Accompany it with a written offer, valid for at least three years, to give any third party, for a charge no more than your cost of physically performing source distribution, a complete machinereadable copy of the corresponding source code, to be distributed under the terms of Sections 1 and 2 above on a medium customarily used for software interchange ; or,

c) Accompany it with the information you received as to the offer to distribute corresponding source code. (This alternative is allowed only for noncommercial distribution and only if you received the program in object code or executable form with such an offer, in accord with Subsection b above.) The source code for a work means the preferred form of the work for making modifications to it. For an executable work, complete source code means all the source code for all modules it contains, plus any associated interface definition files, plus the scripts used to control compilation and installation of the executable. However, as a special exception, the source code distributed need not include anything that is normally distributed (in either source or binary form) with the major

components (compiler, kernel, and so on) of the operating system on which the executable runs, unless that component itself accompanies the executable. If distribution of executable or object code is made by offering access to copy from a designated place, then offering equivalent access to copy the source code from the same place counts as distribution of the source code, even though third parties are not compelled to copy the source along with the object code.

4. You may not copy, modify, sublicense, or distribute the Program except as expressly provided under this License. Any attempt otherwise to copy, modify, sublicense or distribute the Program is void, and will automatically terminate your rights under this License.

However, parties who have received copies, or rights, from you under this License will not have their licenses terminatedso long as such parties remain in full compliance.

5. You are not required to accept this License, since you have not signed it. However, nothing else grants you permission to modify or distribute the Program or its derivative works.

These actions are prohibited by law if you do not accept this License.Therefore, by modifying or distributing the Program (or any work based on the Program), you indicate your acceptance of this License to do so, and all its terms and conditions for copying, distributing or modifying the Program or works based on it.

6. Each time you redistribute the Program (or any work based on the Program), the recipient automatically receives a license from the original licensor to copy, distribute or modify the Program subject to these terms and conditions. You may not impose any further restrictions on the recipients' exercise of the rights granted herein. You are not responsible for enforcing compliance by third parties to this License.

7. If, as a consequence of a court judgment or allegation of patent infringement or for any other reason (not limited to patent issues), conditions are imposed on you (whether by court order, agreement or otherwise)that contradict the conditions of this License, they do not excuse you from the conditions of this License. If you cannot distribute so as to satisfy simultaneously your obligations under this License and any other pertinent obligations, then as a consequence you may not distribute the Program at all.

For example, if a patent license would not permit royaltyfree redistribution of the Program by all those who receive copies directly or indirectly through you, then the only way you could satisfy both it and this License would be to refrain entirely from distribution of the Program.

If any portion of this section is held invalid or unenforceable under any particular circumstance, the balance of the section is intended to apply and the section as a whole is intended to apply in other circumstances. It is not the purpose of this section to induce you to infringe any patents or other property right claims or to contest validity of any such claims; this section has the sole purpose of protecting the integrity of the free software distribution system, which is implemented by public license practices. Many people have made generous contributions to the wide range of software distributed through that system in reliance on consistent application of that system ; it is up to the author/donor to decide if he or she is willing to distribute software through any other system and a licensee cannot impose that choice. This section is intended to make thoroughly clear what is believed to be a consequence of the rest of this License.

8. If the distribution and/or use of the Program is restricted in certain countries either by patents or by copyrighted interfaces, the original copyright holder who places the Program under this License may add an explicit geographical distribution limitation excluding those countries,so that distribution is permitted only in or among countries not thus excluded. In such case, this License incorporates the limitation as if written in the body of this License.

9. The Free Software Foundation may publish revised and/or new versions of the General Public License from time to time. Such new versions will be similar in spirit to the present version, but may differ in detail to address new problems or concerns. Each version is given a distinguishing version number. If the Program specifies a version number of this License which applies to it and "any later version", you have the option of following the terms and conditions either of that version or of any later version published by the Free Software Foundation. If the Program does not specify a version number of this License, you may choose any version ever published by the Free Software Foundation.

10. If you wish to incorporate parts of the Program into other free programs whose distribution conditions are different, write to the author to ask for permission. For software which is copyrighted by the Free Software Foundation,write to the Free Software Foundation ; we sometimes make exceptions for this. Our decision will be guided by the two goals of preserving the free status of all derivatives of our free software and of promoting the sharing and reuse of software generally.

NO WARRANTY

11. BECAUSE THE PROGRAM IS LICENSED FREE OF CHARGE, THERE IS NO WARRANTY FOR THE PROGRAM, TO THE EXTENT PERMITTED BY APPLICABLE LAW. EXCEPT WHEN OTHERWISE STATED IN WRITING THE COPYRIGHT HOLDERS AND/OR OTHER PARTIES PROVIDE THE PROGRAM "ASIS" WITHOUT WARRANTY OF ANY KIND, EITHER EXPRESSED OR IMPLIED, INCLUDING, BUT NOT LIMITED TO, THE IMPLIED WARRANTIES OF MERCHANTABILITY AND FITNESS FOR A PARTICULAR PURPOSE. THE ENTIRE RISK AS TO THE QUALITY AND PERFORMANCE OF THE PROGRAM IS WITH YOU. SHOULD THE PROGRAMPROVE DEFECTIVE, YOU ASSUME THE COST OF ALL NECESSARY SERVICING, REPAIR OR CORRECTION.

12. IN NO EVENT UNLESS REQUIRED BY APPLICABLE LAW OR AGREED TO IN WRITING WILL ANY COPYRIGHT HOLDER, OR ANY OTHER PARTY WHO MAY MODIFY AND/OR REDISTRIBUTE DAMAGES, INCLUDING ANY GENERAL, SPECIAL, INCIDENTAL OR CONSEQUENTIAL DAMAGES ARISING OUT OF THE USE OR INABILITY TO USE THE PROGRAM (INCLUDING BUT NOT LIMITED TO LOSS OF DATA OR DATA BEING RENDERED INACCURATE OR LOSSES SUSTAINED BY YOU OR THIRD PARTIES OR A FAILURE OF THE PROGRAM TO OPERATE WITH ANY OTHER PROGRAMS), EVEN IF SUCH HOLDER OR OTHER PARTY HAS BEEN ADVISED OF THE POSSIBILITY OF SUCH DAMAGES.

END OF TERMS AND CONDITIONS

How to Apply These Terms to Your New Programs If you develop a new program, and you want it to be of the greatest possible use to the public, the best way to achieve this is to make it free software which everyone can redistribute and change under these terms. To do so, attach the following notices to the program. It is safest to attach them to the start of each source file to most effectively convey the exclusion of warranty ; and each file should have at least the "copyright" line and a pointer to where the full notice is found.one line to give the program's name and an idea of what it does.

Copyright (C)yyyy name of author

This program is free software ; you can redistribute it and/or modify it under the terms of the GNU General Public License as published by the Free Software Foundation ; either version 2 of the License, or (at your option)any later version.

This program is distributed in the hope that it will be useful, but WITHOUT ANY WARRANTY ; without even the implied warranty of MERCHANTABILITY or FITNESS FOR A PARTICULAR PURPOSE. See the GNU General Public License for more details.

You should have received a copy of the GNU General Public License along with this program ; if not, write to the Free Software Foundation, Inc.,51 Franklin Street, Fifth Floor, Boston, MA 02110-1301, USA.
Also add information on how to contact you by electronic and paper mail. If the program is interactive, make it output a short notice like this when it starts in an interactive mode :

Gnomovision version 69, Copyright (C) year name of author Gnomovision comes with ABSOLUTELY NO WARRANTY ; for details type 'show w'. This is free software, and you are welcome to redistribute it under certain conditions ; type 'show c' for details.

The hypothetical commands 'show w' and 'show c' should show the appropriate parts of the General Public License. Of course, the commands you use may be called something other than 'show w' and 'show c' ; they could even be mouse-clicks or menu items-- whatever suits your program.

You should also get your employer (if you work as a programmer)or your school, if any, to sign a "copyright disclaimer" for the program,if necessary. Here is a sample ; alter the names:

Yoyodyne, Inc.,hereby disclaims all copyright interest in the program 'Gnomovision' (which makes passes at compilers) written by James Hacker. signature of Ty Coon, 1 April 1989 Ty Coon, President of Vice This General Public License does not permit incorporating your program into proprietary programs. If your program is a subroutine library, you may consider it more useful to permit linking proprietary applications with the library. If this is Lwihcaetn ysoeu want to do, use the GNU Lesser General Public instead of this License.

GNU GENERAL PUBLIC LICENSE

Version 3, 29 June 2007

Copyright (C) 2007 Free Software Foundation, Inc. <http://fsf.org/>

Everyone is permitted to copy and distribute verbatim copies of this license document, but changing it is not allowed.

Preamble

The GNU General Public License is a free, copyleft license for software and other kinds of works. The licenses for most software and other practical works are designed to take away your freedom to share and change the works. By contrast, the GNU General Public License is intended to guarantee your freedom to share and change all versions of a program-- to make sure it remains free software for all its users.

We, the Free Software Foundation, use the GNU General Public License for most of our software; it applies also to any other work released this way by its authors.

You can apply it to your programs, too. When we speak of free software, we are referring to freedom, not price. Our General Public Licenses are designed to make sure that you have the freedom to distribute copies of free software (and charge for them if you wish), that you receive source code or can get it if you want it, that you can change the software or use pieces of it in new free programs, and that you know you can do these things.

To protect your rights, we need to prevent others from denying you these rights or asking you to surrender the rights. Therefore, you have certain responsibilities if you distribute copies of the software, or if you modify it: responsibilities to respect the freedom of others. For example, if you distribute copies of such a program, whether gratis or for a fee, you must pass on to the recipients the same freedoms that you received. You must make sure that they, too, receive or can get the source code. And you must show them these terms so they know their rights. Developers that use the GNU GPL protect your rights with two steps: (1) assert copyright on the software, and (2) offer you this License giving you legal permission to copy, distribute and/or modify it. For the developers' and authors' protection, the GPL clearly explains that there is no arranty for this free software. For both users' and authors' sake, the GPL requires that modified versions be marked as changed, so that their problems will not be attributed erroneously to authors of previous versions. Some devices are designed to deny users access to install or run modified versions of the software inside them, although the manufacturer can do so. This is fundamentally incompatible with the aim of protecting users' freedom to change the software. The systematic pattern of such abuse occurs in the area of products for individuals to use, which is precisely where it is most unacceptable. Therefore, we have designed this version of the GPL to prohibit the practice for those products. If such problems arise substantially in other domains, we stand ready to extend this provision to those domains in future versions of the GPL, as needed to protect the freedom of users.

Finally, every program is threatened constantly by software patents. States should not allow patents to restrict development and use of software on general-purpose omputers, but in those that do, we wish to avoid the special anger that patents applied to a free program could make it ffectively proprietary. To prevent this, the GPL assures that atents cannot be used to render the program non-free. he precise terms and conditions for copying, distribution and modification follow.

TERMS AND CONDITIONS

0. Definitions.

"This License" refers to version 3 of the GNU General Public License.
Copyright" also means copyright-like laws that apply to other kinds of works, such as semiconductor masks. "The Program" refers to any copyrightable work licensed under this License. Each licensee is addressed as "you". "Licensees" and "recipients" may be individuals or organizations.

To "modify" a work means to copy from or adapt all or part of the work in a fashion requiring copyright permission, other than the making of an exact copy. The resulting work is called a "modified version" of the earlier work or a work "based on" the earlier work.

A "covered work" means either the unmodified Program or a work based on the Program.

To "propagate" a work means to do anything with it that, without permission, would make you directly or secondarily liable for infringement under applicable copyright law, except executing it on a computer or modifying a private copy.

Propagation includes copying, distribution (with or without modification), making available to the public, and in some countries other activities as well.

To "convey" a work means any kind of propagation that enables other parties to make or receive copies. Mere interaction with a user through a computer network, with no transfer of a copy, is not conveying. An interactive user interface displays "Appropriate Legal Notices" to the extent that it includes a convenient and prominently visible feature that (1) displays an appropriate copyright notice, and (2) tells the user that there is no warranty for the work (except to the extent that warranties are provided), that licensees may convey the work under this License, and how to view a copy of this License. If the interface presents a list of user commands or options, such as a menu, a prominent item in the list meets this criterion.

1. Source Code.

The "source code" for a work means the preferred form of the work for making modifications to it. "Object code" means any non-source form of a work.

A "Standard Interface" means an interface that either is an official standard defined by a recognized standards body, or, in the case of interfaces specified for a particular programming language, one that is widely used among developers working in that language.

The "System Libraries" of an executable work include anything, other than the work as a whole, that (a) is included in the normal form of packaging a Major Component, but which is not part of that Major Component, and (b) serves only to enable use of the work with that Major Component, or to implement a Standard Interface for which an implementation is available to the public in source code form. A "Major Component", in this context, means a major essential component (kernel, window system, and so on) of the specific operating system (if any) on which the executable work runs, or a compiler used to produce the work, or an object code interpreter used to run it.

The "Corresponding Source" for a work in object code form means all the source code needed to generate, install, and (for an executable work) run the object code and to modify the work, including scripts to control those activities.

However, it does not include the work's System Libraries, or generalpurpose tools or generally available free programs which are used unmodified in performing those activities but which are not part of the work. For example, Corresponding Source includes interface definition files associated with source files for the work, and the source code for shared libraries and dynamically linked subprograms that the work is specifically designed to require, such as by intimate data communication or control flow between those subprograms and other parts of the work.

The Corresponding Source need not include anything that users can regenerate automatically from other parts of the Corresponding Source. The Corresponding Source for a work in source code form is that same work.

2. Basic Permissions.

All rights granted under this License are granted for the term of copyright on the Program, and are irrevocable provided the stated conditions are met. This License explicitly affirms your unlimited permission to run the unmodified Program. The output from running a covered work is covered by this License only if the output, given its content, constitutes a covered work. This License acknowledges your rights of fair use or other equivalent, as provided by copyright law.

You may make, run and propagate covered works that you do not convey, without conditions so long as your license otherwise remains in force. You may convey covered works to others for the sole purpose of having them make modifications exclusively for you, or provide you with facilities for running those works, provided that you comply with the terms of this License in conveying all material for which you do not control copyright. Those thus making or running the covered works for you must do so exclusively on your behalf, under your direction and control, on terms that prohibit them from making any copies of your copyrighted material outside their relationship with you. Conveying under any other circumstances is permitted solely under the conditions stated below. Sublicensing is not allowed; section 10 makes it unnecessary.

3. Protecting Users' Legal Rights From anti-Circumvention Law.

No covered work shall be deemed part of an effective technological measure under any applicable law fulfilling obligations under article 11 of the WIPO copyright treaty adopted on 20 December 1996, or similar laws prohibiting or restricting circumvention of such measures.

When you convey a covered work, you waive any legal power to forbid circumvention of technological measures to the extent such circumvention is effected by exercising rights under this License with respect to the covered work, and you disclaim any intention to limit operation or modification of the work as a means of enforcing, against the work's users, your or third parties' legal rights to forbid circumvention of technological measures.

4. Conveying Verbatim Copies.

You may convey verbatim copies of the Program's source code as you receive it, in any medium, provided that you conspicuously and appropriately publish on each copy an appropriate copyright notice; keep intact all notices stating that this License and any non-permissive terms added in accord with section 7 apply to the code; keep intact all notices of the absence of any warranty; and give all recipients a copy of this License along with the Program. You may charge any price or no price for each copy that you convey, and you may offer support or warranty protection for a fee.

5. Conveying Modified Source Versions.

You may convey a work based on the Program, or the modifications to produce it from the Program, in the form of source code under the terms of section 4, provided that you also meet all of these conditions:

a) The work must carry prominent notices stating that you modified it, and giving a relevant date.

b) The work must carry prominent notices stating that it is released under this License and any conditions added under section 7. This requirement modifies the requirement in section 4 to "keep intact all notices".

c) You must license the entire work, as a whole, under this License to anyone who comes into possession of a copy. This License will therefore apply, along with any applicable section 7 additional terms, to the whole of the work, and all its parts, regardless of how they are packaged. This License gives no permission to license the work in any other way, but it does not invalidate such permission if you have separately received it.

d) If the work has interactive user interfaces, each must display Appropriate Legal Notices; however, if the Program has interactive interfaces that do not display Appropriate Legal Notices, your work need not make them do so. A compilation of a covered work with other separate and independent works, which are not by their nature extensions of the covered work, and which are not combined with it such as to form a larger program, in or on a volume of a storage or distribution medium, is called an "aggregate" if the compilation and its resulting copyright are not used to limit the access or legal rights of the compilation's users beyond what the individual works permit. Inclusion of a covered work in an aggregate does not cause this License to apply to the other parts of the aggregate.

6. Conveying Non-Source Forms.

You may convey a covered work in object code form under the terms of sections 4 and 5, provided that you also convey the machine-readable Corresponding Source under the terms of this License, in one of these ways:

a) Convey the object code in, or embodied in, a physical product (including a physical distribution medium), accompanied by the Corresponding Source fixed on a durable physical medium customarily used for software interchange.

b) Convey the object code in, or embodied in, a physical product (including a physical distribution medium), accompanied by a written offer, valid for at least three years and valid for as long as you offer spare parts or customer support for that product model, to give anyone who possesses the object code either (1) a copy of the Corresponding Source for all the software in the product that is covered by this License, on a durable physical medium customarily used for software interchange, for a price no more than your reasonable cost of physically performing this conveying of source, or (2) access to copy the Corresponding Source from a network server at no charge.

c) Convey individual copies of the object code with a copy of the written offer to provide the corresponding Source. This alternative is allowed only occasionally and noncommercially, and only if you received the object code with such an offer, in accord with subsection 6b.

d) Convey the object code by offering access from a designated place (gratis or for a charge), and offer equivalent access to the Corresponding Source in the same way through the same place at no further charge. You need not require recipients to copy the Corresponding Source along with the object code. If the place to copy the object code is a network server, the Corresponding Source may be on a different server (operated by you or a third party) that supports equivalent copying facilities, provided you maintain clear directions next to the object code saying where to find the Corresponding Source. Regardless of what server hosts the Corresponding Source, you remain obligated to ensure that it is available for as long as needed to satisfy these requirements.

e) Convey the object code using peer-to-peer transmission, provided you inform other peers where the object code and Corresponding Source of the work are being offered to the general public at no charge under subsection 6d. A separable portion of the object code, whose source code is excluded from the Corresponding Source as a System Library, need not be included in conveying the object code work. A "User Product" is either (1) a "consumer product", which means any tangible personal property which is normally used for personal, family, or household purposes, or (2) anything designed or sold for incorporation into a dwelling. In determining whether a product is a consumer product, doubtful cases shall be resolved in favor of coverage. For a particular product received by a particular user, "normally used" refers to a typical or common use of that class of product, regardless of the status of the particular user or of the way in which the particular user actually uses, or expects or is expected to use, the product. A product is a consumer product regardless of whether the product has substantial commercial, industrial or non-consumer uses, unless such uses represent the only significant mode of use of the product.

"Installation Information" for a User Product means any methods, procedures, authorization keys, or other information required to install and execute modified versions of a covered work in that User Product from a modified version of its Corresponding Source. The information must suffice to ensure that the continued functioning of the modified object code is in no case prevented or interfered with solely because modification has been made. If you convey an object code work under this section in, or with, or specifically for use in, a User Product, and the conveying occurs as part of a transaction in which the right of possession and use of the User Product is transferred to the recipient in perpetuity or for a fixed term (regardless of how the transaction is characterized), the Corresponding Source conveyed under this section must be accompanied by the Installation Information. But this requirement does not apply if neither you nor any third party retains the ability to install modified object code on the User Product (for example, the work has been installed in ROM).

The requirement to provide Installation Information does not include a requirement to continue to provide support service, warranty, or updates for a work that has been modified or installed by the recipient, or for the User Product in which it has been modified or installed. Access to a network may be denied when the modification itself materially and adversely affects the operation of the network or violates the rules and protocols for communication across the network. Corresponding Source conveyed, and Installation Information provided, in accord with this section must be in a format that is publicly documented (and with an implementation available to the public in source code form), and must require no special password or key for unpacking, reading or copying.

7. Additional Terms.

"Additional permissions" are terms that supplement the terms of this License by making exceptions from one or more of its conditions. Additional permissions that are applicable to the entire Program shall be treated as though they were included in this License, to the extent that they are valid under applicable law. If additional permissions apply only to part of the Program, that part may be used separately under those permissions, but the entire Program remains governed by this License without regard to the additional permissions. When you convey a copy of a covered work, you may at your option remove any additional permissions from that copy, or from any part of it. (Additional permissions may be written to require their own removal in certain cases when you modify the work.) You may place additional permissions on material, added by you to a covered work, for which you have or can give appropriate copyright permission. Notwithstanding any other provision of this License, for material you add to a covered work, you may (if authorized by the copyright holders of that material) supplement the terms of this License with terms:

a) Disclaiming warranty or limiting liability differently from the terms of sections 15 and 16 of this License; or

b) Requiring preservation of specified reasonable legal notices or author attributions in that material or in the Appropriate Legal Notices displayed by works containing it; or

c) Prohibiting misrepresentation of the origin of that material, or requiring that modified versions of such material be marked in reasonable ways as different from the original version; or

d) Limiting the use for publicity purposes of names of licensors or authors of the material; or

e) Declining to grant rights under trademark law for use of some trade names, trademarks, or service marks; or

f) Requiring indemnification of licensors and authors of that material by anyone who conveys the material (or modified versions of it) with contractual assumptions of liability to the recipient, for any liability that these contractual assumptions directly impose on those licensors and authors. All other non-permissive additional terms are considered "further restrictions" within the meaning of section 10. If the Program as you received it, or any part of it, contains a notice stating that it is governed by this License along with a term that is a further restriction, you may remove that term. If a license document contains a further restriction but permits relicensing or conveying under this License, you may add to a covered work material governed by the terms of that license document, provided that the further restriction does not survive such relicensing or conveying. If you add terms to a covered work in accord with this section, you must place, in the relevant source files, a statement of the additional terms that apply to those files, or a notice indicating where to find the applicable terms. Additional terms, permissive or non-permissive, may be stated in the form of a separately written license, or stated as exceptions; the above requirements apply either way.

8. Termination.

You may not propagate or modify a covered work except as expressly provided under this License. Any attempt otherwise to propagate or modify it is void, and will automatically terminate your rights under this License (including any patent licenses granted under the third paragraph of section 11).

However, if you cease all violation of this License, then your license from a particular copyright holder is reinstated (a) provisionally, unless and until the copyright holder explicitly and finally terminates your license, and (b) permanently, if the copyright holder fails to notify you of the violation by some reasonable means prior to 60 days after the cessation. Moreover, your license from a particular copyright holder is reinstated permanently if the copyright holder notifies you ofthe violation by some reasonable means, this is the first time you have received notice of violation of this License (for any work) from that copyright holder, and you cure the violation prior to 30 days after your receipt of the notice. Termination of your rights under this section does not terminate the licenses of parties who have received copies or rights from you under this License. If your rights have been terminated and not permanently reinstated, you do not qualify to receive new licenses for the same material under section 10.

9. Acceptance Not Required for Having Copies.

You are not required to accept this License in order to receive or run a copy of the Program. Ancillary propagation of a covered work occurring solely as a consequence of using peer-to-peer transmission to receive a copy likewise does not require acceptance. However, nothing other than this License grants you permission to propagate or modify any covered work. These actions infringe copyright if you do not accept this License. Therefore, by modifying or propagating a covered work, you indicate your acceptance of this License to do so.

10. Automatic Licensing of Downstream Recipients.

Each time you convey a covered work, the recipient automatically receives a license from the original licensors, to run, modify and propagate that work, subject to this License. You are not responsible for enforcing compliance by third parties with this License. An "entity transaction" is a transaction transferring control of an organization, or substantially all assets of one, or subdividing an organization, or merging organizations. If propagation of a covered work results from an entity transaction, each party to that transaction who receives a copy of the work also receives whatever licenses to the work the party's predecessor in interest had or could give under the previous paragraph, plus a right to possession of the Corresponding Source of the work from the predecessor in interest, if the predecessor has it or can get it with reasonable efforts. You may not impose any further restrictions on the exercise of the rights granted or affirmed under this License. For example, you may not impose a license fee, royalty, or other charge for exercise of rights granted under this License, and you may not initiate litigation (including a cross-claim or counterclaim in a lawsuit) alleging that any patent claim is infringed by making, using, selling, offering for sale, or importing the Program or any portion of it.

11. Patents.

A "contributor" is a copyright holder who authorizes use under this License of the Program or a work on which the Program is based. The work thus licensed is called the contributor's "contributor version". A contributor's "essential patent claims" are all patent claims owned or controlled by the contributor, whether already acquired or hereafter acquired, that would be infringed by some manner, permitted by this License, of making, using, or selling its contributor version, but do not include claims that would be infringed only as a consequence of further modification of the contributor version. For purposes of this definition, "control" includes the right to grant patent sublicenses in a manner consistent with the requirements of this License. Each contributor grants you a non-exclusive, worldwide, royaltyfree patent license under the contributor's essential patent claims, to make, use, sell, offer for sale, import and otherwise run, modify and propagate the contents of its contributor version.

In the following three paragraphs, a "patent license" is any express agreement or commitment, however denominated, not to enforce a patent (such as an express permission to practice a patent or covenant not to sue for patent infringement). To "grant" such a patent license to a party means to make such an agreement or commitment not to enforce a patent against the party. If you convey a covered work, knowingly relying on a patent license, and the Corresponding Source of the work is not available for anyone to copy, free of charge and under the terms of this License, through a publicly available network server or other readily accessible means, then you must either (1) cause the Corresponding Source to be so available, or (2) arrange to deprive yourself of the benefit of the patent license for this particular work, or (3) arrange, in a manner consistent with the requirements of this License, to extend the patent license to downstream recipients. "Knowingly relying" means you have actual knowledge that, but for the patent license, your conveying the covered work in a country, or your recipient's use of the covered work in a country, would infringe one or more identifiable patents in that country that you have reason to believe are valid. If, pursuant to or in connection with a single transaction or arrangement, you convey, or propagate by procuring conveyance of, a covered work, and grant a

patent license to some of the parties receiving the covered work authorizing them to use, propagate, modify or convey a specific copy of the covered work, then the patent license you grant is automatically extended to all recipients of the covered work and works based on it. A patent license is "discriminatory" if it does not include within the scope of its coverage, prohibits the exercise of, or is conditioned on the non-exercise of one or more of the rights that are specifically granted under this License. You may not convey a covered work if you are a party to an arrangement with a third party that is in the business of distributing software, under which you make payment to the third party based on the extent of your activity of conveying the work, and under which the third party grants, to any of the parties who would receive the covered work from you, a discriminatory patent license

(a) in connection with copies of the covered work conveyedby you (or copies made from those copies), or

(b) primarily for and in connection with specific products or compilations that contain the covered work, unless you entered into that arrangement, or that patent license was granted, prior to 28 March 2007. Nothing in this License shall be construed as excluding or limiting any implied license or other defenses to infringement that may otherwise be available to you under applicable patent law.

12. No Surrender of Others' Freedom.

If conditions are imposed on you (whether by court order, agreement or otherwise) that contradict the conditions of this License, they do not excuse you from the conditions of thisLicense. If you cannot convey a covered work so as to satisfy simultaneously your obligations under this License and any other pertinent obligations, then as a consequence you may not convey it at all. For example, if you agree to terms that obligate you to collect a royalty for further conveying from those to whom you convey the Program, the only way you could satisfy both those terms and this License would be to refrain entirely from conveying the Program.

13. Use with the GNU Affero General Public License.

Notwithstanding any other provision of this License, you have permission to link or combine any covered work with a work licensed under version 3 of the GNU Affero General Public License into a single combined work, and to convey the resulting work. The terms of this License will continue to apply to the part which is the covered work, but the special requirements of the GNU Affero General Public License, section 13, concerning interaction through a network will apply to the combination as such.

14. Revised Versions of this License.

The Free Software Foundation may publish revised and/ or new versions of the GNU General Public License from time to time. Such new versions will be similar in spirit to the present version, but may differ in detail to address new problems or concerns.

Each version is given a distinguishing version number. If the Program specifies that a certain numbered version of the GNU General Public License "or any later version" applies to it, you have the option of following the terms and conditions either of that numbered version or of any later version published by the Free Software Foundation. If the Program does not specify a version number of the GNU General Public License, you may choose any version ever published by the Free Software Foundation. If the Program specifies that a proxy can decide which future versions of the GNU General Public License can be used, that proxy's public statement of acceptance of a version permanently authorizes you to choose that version for the Program. Later license versions may give you additional or different permissions. However, no additional obligations are imposed on any author or copyright holder as a result of your choosing to follow a later version.

15. Disclaimer of Warranty.

THERE IS NO WARRANTY FOR THE PROGRAM, TO THE EXTENT PERMITTED BY APPLICABLE LAW. EXCEPT WHEN OTHERWISE STATED IN WRITING THE COPYRIGHT HOLDERS AND/OR OTHER PARTIES PROVIDE THE PROGRAM "AS IS" WITHOUT WARRANTY OF ANY KIND, EITHER EXPRESSED OR IMPLIED, INCLUDING, BUT NOT LIMITED TO, THE IMPLIED WARRANTIES OF MERCHANTABILITY AND FITNESS FOR A PARTICULAR PURPOSE. THE ENTIRE RISK AS TO THE QUALITY AND PERFORMANCE OF THE PROGRAM IS WITH YOU. SHOULD THE PROGRAM PROVE DEFECTIVE, YOU ASSUME THE COST OF ALL NECESSARY SERVICING, REPAIR OR CORRECTION.

16. Limitation of Liability.

IN NO EVENT UNLESS REQUIRED BY APPLICABLE LAW OR AGREED TO IN WRITING WILL ANY COPYRIGHT HOLDER, OR ANY OTHER PARTY WHO MODIFIES AND/OR CONVEYS THE PROGRAM AS PERMITTED ABOVE, BE LIABLE TO YOU FOR DAMAGES, INCLUDING ANY GENERAL, SPECIAL, INCIDENTAL OR CONSEQUENTIAL DAMAGES ARISING OUT OF THE USE OR INABILITY TO USE THE PROGRAM (INCLUDING BUT NOT LIMITED TO LOSS OF DATA OR DATA BEING RENDERED INACCURATE OR LOSSES SUSTAINED BY YOU OR THIRD PARTIES OR A FAILURE OF THE PROGRAM TO OPERATE WITH ANY OTHER PROGRAMS), EVEN IF SUCH HOLDER OR OTHER PARTY HAS BEEN ADVISED OF THE POSSIBILITY OF SUCH DAMAGES.

17. Interpretation of Sections 15 and 16.

If the disclaimer of warranty and limitation of liability provided above cannot be given local legal effect according to their terms, reviewing courts shall apply local law that most closely approximates an absolute waiver of all civil liability in connection with the Program, unless a warranty or assumption of liability accompanies a copy of the Program in return for a fee.

OpenSSL Combined License

The OpenSSL toolkit stays under a dual license, i.e. both the conditions of the OpenSSL License and the original SSLeay license apply to the toolkit.

See below for the actual license texts. Actually both licenses are BSD-style Open Source licenses. In case of any license issues related to OpenSSL please contact openssl-core@openssl.org.

Component Name	License	URL
openssl-1.0.2e	OpenSSL	Combined License http://www.openssl.org/source

Copyright (c) 1998-2011 The OpenSSL Project. All rights reserved.

Redistribution and use in source and binary forms, with or without modification, are permitted provided that the following conditions are met:

1. Redistributions of source code must retain the above copyright notice, this list of conditions and the following disclaimer.

2. Redistributions in binary form must reproduce the above copyright notice, this list of conditions and the following disclaimer in the documentation and/or other materials provided with the distribution.

3. All advertising materials mentioning features or use of this software must display the following acknowledgment: "This product includes software developed by the OpenSSL Projectfor use in the OpenSSL Toolkit. (http://www.openssl.org/)"

4. The names "OpenSSL Toolkit" and "OpenSSL Project" must not be used to endorse or promote products derived from this software without prior written permission. For written permission, please contact openssl-core@openssl.org.

5. Products derived from this software may not be called "OpenSSL" nor may "OpenSSL" appear in their names without prior written permission of the OpenSSL Project.

6. Redistributions of any form whatsoever must retain the following acknowledgment: "This product includes software developed by the OpenSSL Project for use in the OpenSSL Toolkit (http://www.openssl.org/)"

THIS SOFTWARE IS PROVIDED BY THE OpenSSL PROJECT ``AS IS'' AND ANY EXPRESSED OR IMPLIED WARRANTIES, INCLUDING, BUT NOT LIMITED TO, THE IMPLIED WARRANTIES OF MERCHANTABILITY AND FITNESS FOR A PARTICULAR PURPOSE ARE DISCLAIMED. IN NO EVENT SHALL THE OpenSSL PROJECT OR ITS CONTRIBUTORS BE LIABLE FOR ANY DIRECT, INDIRECT, INCIDENTAL, SPECIAL, EXEMPLARY, OR CONSEQUENTIAL DAMAGES (INCLUDING, BUT NOT LIMITED TO, PROCUREMENT OF SUBSTITUTE GOODS OR SERVICES; LOSS OF USE, DATA, OR PROFITS; OR BUSINESS INTERRUPTION) HOWEVER CAUSED AND ON ANY THEORY OF LIABILITY, WHETHER IN CONTRACT, STRICT LIABILITY, OR TORT (INCLUDING NEGLIGENCE OR OTHERWISE) ARISING IN ANY WAY OUT OF THE USE OF THIS SOFTWARE, EVEN IF ADVISED OF THE POSSIBILITY OF SUCH DAMAGE.

This product includes cryptographic software written by Eric Young(eay@cryptsoft.com). This product includes software written by Tim Hudson (tjh@cryptsoft.com).

Original SSLeay License

Copyright (C) 1995-1998 Eric Young (eay@cryptsoft.com) All rights reserved.

This package is an SSL implementation written by Eric Young (eay@cryptsoft.com).

The implementation was written so as to conform with Netscapes SSL.

This library is free for commercial and non-commercial use as long as the following conditions are aheared to. The following conditions apply to all code found in this distribution, be it the RC4, RSA, lhash, DES, etc., code; not just the SSL code. The SSL documentation included with this distribution is covered by the same copyright terms except that the holder is Tim Hudson (tjh@cryptsoft.com).

Copyright remains Eric Young's, and as such any Copyright notices in the code are not to be removed. If this package is used in a product, Eric Young should be given attribution as the author of the parts of the library used. This can be in the form of a textual message at program startup or in documentation (online or textual) provided with the package. Redistribution and use in source and binary forms, with or without modification, are permitted provided that the following conditions are met:

1. Redistributions of source code must retain the copyright notice, this list of conditions and the following disclaimer.

2. Redistributions in binary form must reproduce the above copyright notice, this list of conditions and the following disclaimer in the documentation and/or other materials provided with the distribution.

3. All advertising materials mentioning features or use of this software must display the following acknowledgement: "This product includes cryptographic software written by Eric Young (eay@cryptsoft.com)" The word 'cryptographic' can be left out if the rouines from the library being used are not cryptographic related :-).

4. If you include any Windows specific code (or a derivative thereof) from the apps directory (application code) you must include an acknowledgement: "This product includes software written by Tim Hudson (tjh@cryptsoft. com)"

THIS SOFTWARE IS PROVIDED BY ERIC YOUNG ``AS IS'' AND ANY EXPRESS OR IMPLIED WARRANTIES, INCLUDING, BUT NOT LIMITED TO, THE IMPLIED WARRANTIES OF MERCHANTABILITY AND FITNESS FOR A PARTICULAR PURPOSE ARE DISCLAIMED. IN NO EVENT SHALL THE AUTHOR OR CONTRIBUTORS BE LIABLE FOR ANY DIRECT, INDIRECT, INCIDENTAL, SPECIAL, EXEMPLARY, OR CONSEQUENTIAL DAMAGES (INCLUDING, BUT NOT LIMITED TO, PROCUREMENT OF SUBSTITUTE GOODS OR SERVICES; LOSS OF USE, DATA, OR PROFITS; OR BUSINESS INTERRUPTION) HOWEVER CAUSED AND ON ANY THEORY OF LIABILITY, WHETHER IN CONTRACT, STRICT LIABILITY, OR TORT (INCLUDING NEGLIGENCE OR OTHERWISE) ARISING IN ANY WAY OUT OF THE USE OF THIS SOFTWARE, EVEN IF ADVISED OF THE POSSIBILITY OF SUCH DAMAGE.

The licence and distribution terms for any publically available version or derivative of this code cannot be changed. i.e. this code cannot simply be copied and put under another distribution licence [including the GNU Public Licence.]

BSD License

Some software components of this product incorporate source code covered under the BSD license as follows.

Component Name	License	URL
net-snmp-5.7.3	BSD	http://www.net-snmp.org/about/license.html
pcre-8.38	BSD	
libcap-1.7.4	BSD 2.0	http://www.kernel.org/pub/linux/libs/security/linux-privs/libcap2
lighttpd-1.4.35	BSD 2.0	http://www.opensource.org/licenses/bsd-license.html
MiniUPnP Project Client	BSD 2.0	
pppd-2.4.7	BSD 2.0	http://opensource.org/licenses/BSD-3-Clause

lighttpd is a secure, fast, compliant, and very flexible webserver that has been optimized for high-performance environments. It has a very low memory footprint compared to other webservers and takes care of cpuload. Its advanced feature-set (FastCGI, CGI, Auth, Output-Compression, URL-Rewriting and many more) make lighttpd the perfect webserver-software for every server that suffers load problems. Simple Network Management Protocol (SNMP) is an Internetstandard protocol for managing devices on IP networks. It is used mostly in network management systems to monitor the devices attached to the network for conditions that need administrative attention. Net-SNMP is a suite of applications used to implement SNMP v1, SNMP v2c and SNMP v3 using both IPv4 and IPv6. For more additional information, send email to help.cctv@hanwha.com.

Copyright (C) 2004, Kneschke, incremental

All rights reserved.

Redistribution and use in source and binary forms, with or without modification, are permitted provided that the following conditions are met :

- Redistributions of source code must retain the above copyright notice, this list of conditions and the following disclaimer.
- Redistributions in binary form must reproduce the above copyright notice, this list of conditions and the following disclaimer in the documentation and/or other materials provided with the distribution.
- Neither the name of the 'incremental' nor the names of its contributors may be used to endorse or promote products derived from this software without specific prior written permission.

THIS SOFTWARE IS PROVIDED BY THE COPYRIGHT HOLDERS AND CONTRIBUTORS “AS IS” AND ANY EXPRESS OR IMPLIED WARRANTIES, INCLUDING, BUT NOT LIMITED TO, THE IMPLIED WARRANTIES OF MERCHANTABILITY AND FITNESS FOR A PARTICULAR PURPOSE ARE DISCLAIMED. IN NO EVENT SHALL THE COPYRIGHT OWNER OR CONTRIBUTORS BE LIABLE FOR ANY DIRECT, INDIRECT, INCIDENTAL, SPECIAL, EXEMPLARY, OR CONSEQUENTIAL DAMAGES (INCLUDING, BUT NOT LIMITED TO, PROCUREMENT OF SUBSTITUTE GOODS OR SERVICES; LOSS OF USE, DATA, OR PROFITS; OR BUSINESS INTERRUPTION) HOWEVER CAUSED AND ON ANY THEORY OF LIABILITY, WHETHER IN CONTRACT, STRICT LIABILITY, OR TORT (INCLUDING NEGLIGENCE OR OTHERWISE) ARISING IN ANY WAY OUT OF THE USE OF THIS SOFTWARE, EVEN IF ADVISED OF THE POSSIBILITY OF SUCH DAMAGE.

Copyright (c) 1998-2001 University College London

All rights reserved.

Redistribution and use in source and binary forms, with or without modification, is permitted provided that the following conditions are met :

1. Redistributions of source code must retain the above copyright notice, this list of conditions and the following disclaimer.

2. Redistributions in binary form must reproduce the above copyright notice, this list of conditions and the following disclaimer in the documentation and/or other materials provided with the distribution.

3. All advertising materials mentioning features or use of this software must display the following acknowledgement: This product includes software developed by the Computer Science Department at University College London.

4. Neither the name of the University nor of the Department may be used to endorse or promote products derived from this software without specific prior written permission.

THIS SOFTWARE IS PROVIDED BY THE AUTHORS AND CONTRIBUTORS ``AS IS'' AND ANY EXPRESSED OR IMPLIED WARRANTIES, INCLUDING, BUT NOT LIMITED TO, THE IMPLIED WARRANTIES OF MERCHANTABILITY AND FITNESS FOR A PARTICULAR PURPOSEARE DISCLAIMED. IN NO EVENT SHALL THE AUTHORS OR CONTRIBUTORS BE LIABLE FOR ANY DIRECT, INDIRECT, INCIDENTAL, SPECIAL, EXEMPLARY, OR CONSEQUENTIAL DAMAGES (INCLUDING, BUT NOT LIMITED TO, PROCUREMENT OF SUBSTITUTE GOODS OR SERVICES; LOSS OF USE, DATA, OR PROFITS; OR BUSINESS INTERRUPTION) HOWEVER CAUSED AND ON ANY THEORY OF LIABILITY, WHETHER IN CONTRACT, STRICT LIABILITY, OR TORT (INCLUDING NEGLIGENCE OR OTHERWISE) ARISING IN ANY WAY OUT OF THE USE OF THIS SOFTWARE, EVEN IF ADVISED OF THE POSSIBILITY OF SUCH DAMAGE.

Copyright (c) 1988, 1989, 1990, 1991, 1993, 1994, 1995, 1996 The Regents of the University of California.

All rights reserved.

Redistribution and use in source and binary forms, with or without modification, are permitted provided that the following conditions are met:

1. Redistributions of source code must retain the above copyright notice, this list of conditions and the following disclaimer.

2. Redistributions in binary form must reproduce the above copyright notice, this list of conditions and the following disclaimer in the documentation and/or other materials provided with the distribution.

3. Neither the name of the Regents of the University of California nor the names of its contributors may be used to endorse or promote products derived from this software without specific prior written permission.

THIS SOFTWARE IS PROVIDED BY THE COPYRIGHT HOLDERS AND CONTRIBUTORS "AS IS" AND ANY EXPRESS OR IMPLIED WARRANTIES, INCLUDING, BUT NOT LIMITED TO, THE IMPLIED WARRANTIES OF MERCHANTABILITY AND FITNESS FOR A PARTICULAR PURPOSE ARE DISCLAIMED. IN NO EVENT SHALL THE COPYRIGHT OWNER OR CONTRIBUTORS BE LIABLE FOR ANY DIRECT, INDIRECT, INCIDENTAL, SPECIAL, EXEMPLARY, OR CONSEQUENTIAL DAMAGES (INCLUDING, BUT NOT LIMITED TO, PROCUREMENT OF SUBSTITUTE GOODS OR SERVICES; LOSS OF USE, DATA, OR PROFITS; OR BUSINESS INTERRUPTION) HOWEVER CAUSED AND ON ANY THEORY OF LIABILITY, WHETHER IN CONTRACT, STRICT LIABILITY, OR TORT (INCLUDING NEGLIGENCE OR OTHERWISE) ARISING IN ANY WAY OUT OF THE USE OF THIS SOFTWARE, EVEN IF ADVISED OF THE POSSIBILITY OF SUCH DAMAGE.

Copyright (c) 2006, Creative Labs Inc

All rights reserved.

Redistribution and use in source and binary forms, with or without modification, are permitted provided that the following conditions are met:

1. Redistributions of source code must retain the above copyright notice, this list of conditions and the following disclaimer.

2. Redistributions in binary form must reproduce the above copyright notice, this list of conditions and the following disclaimer in the documentation and/or other materials provided with the distribution.

3. Neither the name of the Creative Labs nor the names of its contributors may be used to endorse or promote products derived from this software without specific prior written permission.

THIS SOFTWARE IS PROVIDED BY THE COPYRIGHT HOLDERS AND CONTRIBUTORS "AS IS" AND ANY EXPRESS OR IMPLIED WARRANTIES, INCLUDING, BUT NOT LIMITED TO, THE IMPLIED WARRANTIES OF MERCHANTABILITY AND FITNESS FOR A PARTICULAR PURPOSE ARE DISCLAIMED. IN NO EVENT SHALL THE COPYRIGHT OWNER OR CONTRIBUTORS BE LIABLE FOR ANY DIRECT, INDIRECT, INCIDENTAL, SPECIAL, EXEMPLARY, OR CONSEQUENTIAL DAMAGES (INCLUDING, BUT NOT LIMITED TO, PROCUREMENT OF SUBSTITUTE GOODS OR SERVICES; LOSS OF USE, DATA, OR PROFITS; OR BUSINESS INTERRUPTION) HOWEVER CAUSED AND ON ANY THEORY OF LIABILITY, WHETHER IN CONTRACT, STRICT LIABILITY, OR TORT (INCLUDING NEGLIGENCE OR OTHERWISE) ARISING IN ANY WAY OUT OF THE USE OF THIS SOFTWARE, EVEN IF ADVISED OF THE POSSIBILITY OF SUCH DAMAGE.

Copyright (c) 2005-2012, Thomas BERNARD

All rights reserved.

Redistribution and use in source and binary forms, with or without modification, are permitted provided that the following conditions are met:

1. Redistributions of source code must retain the above copyright notice, this list of conditions and the following disclaimer.

2. Redistributions in binary form must reproduce the above copyright notice, this list of conditions and the following disclaimer in the documentation and/or other materials provided with the distribution.

3. Neither the name of Thomas BERNARD nor the names of its contributors may be used to endorse or promote products derived from this software without specific prior written permission.

THIS SOFTWARE IS PROVIDED BY THE COPYRIGHT HOLDERS AND CONTRIBUTORS "AS IS" AND ANY EXPRESS OR IMPLIED WARRANTIES, INCLUDING, BUT NOT LIMITED TO, THE IMPLIED WARRANTIES OF MERCHANTABILITY AND FITNESS FOR A PARTICULAR PURPOSE ARE DISCLAIMED. IN NO EVENT SHALL THE COPYRIGHT OWNER OR CONTRIBUTORS BE LIABLE FOR ANY DIRECT, INDIRECT, INCIDENTAL, SPECIAL, EXEMPLARY, OR CONSEQUENTIAL DAMAGES (INCLUDING, BUT NOT LIMITED TO, PROCUREMENT OF SUBSTITUTE GOODS OR SERVICES; LOSS OF USE, DATA, OR PROFITS; OR BUSINESS INTERRUPTION) HOWEVER CAUSED AND ON ANY THEORY OF LIABILITY, WHETHER IN CONTRACT, STRICT LIABILITY, OR TORT (INCLUDING NEGLIGENCE OR OTHERWISE) ARISING IN ANY WAY OUT OF THE USE OF THIS SOFTWARE, EVEN IF ADVISED OF THE POSSIBILITY OF SUCH DAMAGE.

Various copyrights apply to this package, listed in various separate parts below. Please make sure that you read all the parts.

Part 1: CMU/UCD copyright notice: (BSD like)

Copyright 1989, 1991, 1992 by Carnegie Mellon University Derivative Work - 1996, 1998-2000

Copyright 1996, 1998-2000 The Regents of the University of California

All Rights Reserved

Permission to use, copy, modify and distribute this software and its documentation for any purpose and without fee is hereby granted, provided that the above copyright notice appears in all copies and that both that copyright notice and this permission notice appear in supporting documentation, and that the name of CMU and The Regents of the University of California not be used in advertising or publicity pertaining to distribution of the software without specific written permission.

CMU AND THE REGENTS OF THE UNIVERSITY OF CALIFORNIA DISCLAIM ALL WARRANTIES WITH REGARD TO THIS SOFTWARE, INCLUDING ALL IMPLIED WARRANTIES OF MERCHANTABILITY AND FITNESS. IN NO EVENT SHALL CMU OR THE REGENTS OF THE UNIVERSITY OF CALIFORNIA BE LIABLE FOR ANY SPECIAL, INDIRECT OR CONSEQUENTIAL DAMAGES OR ANY DAMAGES WHATSOEVER RESULTING FROM THE LOSS OF USE, DATA OR PROFITS, WHETHER IN AN ACTION OF CONTRACT, NEGLIGENCE OR OTHER TORTIOUS ACTION, ARISING OUT OF OR IN CONNECTION WITH THE USE OR PERFORMANCE OF THIS SOFTWARE.

Part 2 : Networks Associates Technology, Inc copyright notice (BSD)

Copyright (c) 2001-2003, Networks Associates Technology, Inc

All rights reserved.

Redistribution and use in source and binary forms, with or without modification, are permitted provided that the following conditions are met: yy Redistributions of source code must retain the above copyright notice, this list of conditions and the following disclaimer. yy Redistributions in binary form must reproduce the above copyright notice, this list of conditions and the following disclaimer in the documentation and/or other materials provided with the distribution. yy Neither the name of the Networks Associates Technology, Inc nor the names of its contributors may be used to endorse or promote products derived from this software without specific prior written permission.

THIS SOFTWARE IS PROVIDED BY THE COPYRIGHT HOLDERS AND CONTRIBUTORS “AS IS” AND ANY EXPRESS OR IMPLIED WARRANTIES, INCLUDING, BUT NOT LIMITED TO, THE IMPLIED WARRANTIES OF MERCHANTABILITY AND FITNESS FOR A PARTICULAR PURPOSE ARE DISCLAIMED. IN NO EVENT SHALL THE COPYRIGHT HOLDERS OR CONTRIBUTORS BE LIABLE FOR ANY DIRECT, INDIRECT, INCIDENTAL, SPECIAL, EXEMPLARY, OR CONSEQUENTIAL DAMAGES (INCLUDING, BUT NOT LIMITED TO, PROCUREMENT OF SUBSTITUTE GOODS OR SERVICES; LOSS OF USE, DATA, OR PROFITS; OR BUSINESS INTERRUPTION) HOWEVER CAUSED AND ON ANY THEORY OF LIABILITY, WHETHER IN CONTRACT, STRICT LIABILITY, OR TORT (INCLUDING NEGLIGENCE OR OTHERWISE) ARISING IN ANY WAY OUT OF THE USE OF THIS SOFTWARE, EVEN IF ADVISED OF THE POSSIBILITY OF SUCH DAMAGE.

Part 3: Cambridge Broadband Ltd. copyrightnotice (BSD)

Portions of this code are copyright (c) 2001-2003, Cambridge Broadband Ltd.

All rights reserved.

Redistribution and use in source and binary forms, with or without modification, are permitted provided that the following conditions are met: yy Redistributions of source code must retain the above copyright notice, this list of conditions and the following disclaimer. yy Redistributions in binary form must reproduce the above copyright notice, this list of conditions and the following disclaimer in the documentation and/or other materials provided with the distribution. yy The name of Cambridge Broadband Ltd. may not be used to endorse or promote products derived from this software without specific prior written permission.

THIS SOFTWARE IS PROVIDED BY THE COPYRIGHT HOLDER “AS IS" AND ANY EXPRESS OR IMPLIED WARRANTIES, INCLUDING, BUT NOT LIMITED TO, THE IMPLIED WARRANTIES OF MERCHANTABILITY AND FITNESS FOR A PARTICULAR PURPOSE ARE DISCLAIMED. IN NO EVENT SHALL THE COPYRIGHT HOLDER BE LIABLE FOR ANY DIRECT, INDIRECT, INCIDENTAL, SPECIAL, EXEMPLARY, OR CONSEQUENTIAL DAMAGES (INCLUDING, BUT NOT LIMITED TO, PROCUREMENT OF SUBSTITUTE GOODS OR SERVICES; LOSS OF USE, DATA, OR PROFITS; OR BUSINESS INTERRUPTION) HOWEVER CAUSED AND ON ANY THEORY OF LIABILITY, WHETHER IN CONTRACT, STRICT LIABILITY, OR TORT (INCLUDING NEGLIGENCE OR OTHERWISE) ARISING IN ANY WAY OUT OF THE USE OF THIS SOFTWARE, EVEN IF ADVISED OF THE POSSIBILITY OF SUCH DAMAGE.

Part 4: Sun Microsystems, Inc. copyright notice

(BSD)

Copyright (c) 2003 Sun Microsystems, Inc., 4150 Network

Circle, Santa Clara, California 95054, U.S.A.

All rights reserved.

Use is subject to license terms below. This distribution may include materials developed by third parties. Sun, Sun Microsystems, the Sun logo and Solaris are trademarks or registered trademarks of Sun Microsystems, Inc. in the U.S. and other countries. Redistribution and use in source and binary forms, with or without modification, are permitted provided that the following conditions are met: yy Redistributions of source code must retain the above copyright notice, this list of conditions and the following disclaimer. yy Redistributions in binary form must reproduce the above copyright notice, this list of conditions and the following disclaimer in the documentation and/or other materials provided with the distribution. yy Neither the name of the Sun Microsystems, Inc. nor the names of its contributors may be used to endorse or promote products derived from this software without specific prior written permission.

THIS SOFTWARE IS PROVIDED BY THE COPYRIGHT HOLDERS AND CONTRIBUTORS “AS IS” AND ANY EXPRESS OR IMPLIED WARRANTIES, INCLUDING, BUT NOT LIMITED TO, THE IMPLIED WARRANTIES OF MERCHANTABILITY AND FITNESS FOR A PARTICULAR PURPOSE ARE DISCLAIMED. IN NO EVENT SHALL THE COPYRIGHT HOLDERS OR CONTRIBUTORS BE LIABLE FOR ANY DIRECT, INDIRECT, INCIDENTAL, SPECIAL, EXEMPLARY, OR CONSEQUENTIAL DAMAGES (INCLUDING, BUT NOT LIMITED TO, PROCUREMENT OF SUBSTITUTE GOODS OR SERVICES; LOSS OF USE, DATA, OR PROFITS; OR BUSINESS INTERRUPTION) HOWEVER CAUSED AND ON ANY THEORY OF LIABILITY, WHETHER IN CONTRACT, STRICT LIABILITY, OR TORT (INCLUDING NEGLIGENCE OR OTHERWISE) ARISING IN ANY WAY OUT OF THE USE OF THIS SOFTWARE, EVEN IF ADVISED OF THE POSSIBILITY OF SUCH DAMAGE.

Part 5: Sparta, Inc copyright notice (BSD)

Copyright (c) 2003-2009, Sparta, Inc

All rights reserved.

Redistribution and use in source and binary forms, with or without modification, are permitted provided that the following conditions are met: yy Redistributions of source code must retain the above copyright notice, this list of conditions and the following disclaimer. yy Redistributions in binary form must reproduce the

above copyright notice, this list of conditions and the following disclaimer in the documentation and/or other materials provided with the distribution. yy Neither the name of Sparta, Inc nor the names of its contributors may be used to endorse or promote products derived from this software without specific prior written permission.

THIS SOFTWARE IS PROVIDED BY THE COPYRIGHT HOLDERS AND CONTRIBUTORS “AS IS” AND ANY EXPRESS OR IMPLIED WARRANTIES, INCLUDING, BUT NOT LIMITED TO, THE IMPLIED WARRANTIES OF MERCHANTABILITY AND FITNESS FOR A PARTICULAR PURPOSE ARE DISCLAIMED. IN NO EVENT SHALL THE COPYRIGHT HOLDERS OR CONTRIBUTORS BE LIABLE FOR ANY DIRECT, INDIRECT, INCIDENTAL, SPECIAL, EXEMPLARY, OR CONSEQUENTIAL DAMAGES (INCLUDING, BUT NOT LIMITED TO, PROCUREMENT OF SUBSTITUTE GOODS OR SERVICES; LOSS OF USE, DATA, OR PROFITS; OR BUSINESS INTERRUPTION) HOWEVER CAUSED AND ON ANY THEORY OF LIABILITY, WHETHER IN CONTRACT, STRICT LIABILITY, OR TORT (INCLUDING NEGLIGENCE OR OTHERWISE) ARISING IN ANY WAY OUT OF THE USE OF THIS SOFTWARE, EVEN IF ADVISED OF THE POSSIBILITY OF SUCH DAMAGE.

Part 6: Cisco/BUPTNIC copyright notice (BSD)

Copyright (c) 2004, Cisco, Inc and Information Network

Center of Beijing University of Posts and Telecommunications.

All rights reserved.

Redistribution and use in source and binary forms, with or without modification, are permitted provided that the following conditions are met: yy Redistributions of source code must retain the above copyright notice, this list of conditions and the following disclaimer. yy Redistributions in binary form must reproduce the above copyright notice, this list of conditions and the following disclaimer in the documentation and/or other materials provided with the distribution. yy Neither the name of Cisco, Inc, Beijing University of Posts and Telecommunications, nor the names of their contributors may be used to endorse or promote products derived from this software without specific prior written permission.

THIS SOFTWARE IS PROVIDED BY THE COPYRIGHT HOLDERS AND CONTRIBUTORS “AS IS” AND ANY EXPRESS OR IMPLIED WARRANTIES, INCLUDING, BUT NOT LIMITED TO, THE IMPLIED WARRANTIES OF MERCHANTABILITY AND FITNESS FOR A PARTICULAR PURPOSE ARE DISCLAIMED. IN NO EVENT SHALL THE COPYRIGHT HOLDERS OR CONTRIBUTORS BE LIABLE FOR ANY DIRECT, INDIRECT, INCIDENTAL, SPECIAL, EXEMPLARY, OR CONSEQUENTIAL DAMAGES (INCLUDING, BUT NOT LIMITED TO, PROCUREMENT OF SUBSTITUTE GOODS OR SERVICES; LOSS OF USE, DATA, OR PROFITS; OR BUSINESS INTERRUPTION) HOWEVER CAUSED AND ON ANY THEORY OF LIABILITY, WHETHER IN CONTRACT, STRICT LIABILITY, OR TORT (INCLUDING NEGLIGENCE OR OTHERWISE) ARISING IN ANY WAY OUT OF THE USE OF THIS SOFTWARE, EVEN IF ADVISED OF THE POSSIBILITY OF SUCH DAMAGE.

Part 7: Fabasoft R&D Software Software GmbH & Co KG copyright Notice (BSD)

Copyright (c) Fabasoft R&D Software GmbH & Co KG, 2003oss@fabasoft.com

Author: Bernhard Penz

Redistribution and use in source and binary forms, with or without modification, are permitted provided that the following conditions are met: yy Redistributions of source code must retain the above copyright notice, this list of conditions and the following disclaimer. yy Redistributions in binary form must reproduce the above copyright notice, this list of conditions and the following disclaimer in the documentation and/or other materials provided with the distribution. yy The name of Fabasoft R&D Software GmbH & Co KG or any of its subsidiaries, brand or product names may not be used to endorse or promote products derived from this software without specific prior written permission.

THIS SOFTWARE IS PROVIDED BY THE COPYRIGHT HOLDER “AS IS” AND ANY EXPRESS OR IMPLIED WARRANTIES, INCLUDING, BUT NOT LIMITED TO, THE IMPLIED WARRANTIES OF MERCHANTABILITY AND FITNESS FOR A PARTICULAR PURPOSE ARE DISCLAIMED. IN NO EVENT SHALL THE COPYRIGHT HOLDER BE LIABLE FOR ANY DIRECT, INDIRECT, INCIDENTAL, SPECIAL, EXEMPLARY, OR CONSEQUENTIAL DAMAGES (INCLUDING, BUT NOT LIMITED TO, PROCUREMENT OF SUBSTITUTE GOODS OR SERVICES; LOSS OF USE, DATA, OR PROFITS; OR BUSINESS INTERRUPTION) HOWEVER CAUSED AND ON ANY THEORY OF LIABILITY, WHETHER IN CONTRACT, STRICT LIABILITY, OR TORT (INCLUDING NEGLIGENCE OR OTHERWISE) ARISING IN ANY WAY OUT OF THE USE OF THIS SOFTWARE, EVEN IF ADVISED OF THE POSSIBILITY OF SUCH DAMAGE.

Part 8: Apple Inc. copyright notice (BSD)

Copyright (c) 2007 Apple Inc.

All rights reserved.

Redistribution and use in source and binary forms, with or without modification, are permitted provided that the following conditions are met:

1. Redistributions of source code must retain the above copyright notice, this list of conditions and the following disclaimer.

2. Redistributions in binary form must reproduce the above copyright notice, this list of conditions and the following disclaimer in the documentation and/or other materials provided with the distribution. 3. Neither the name of Apple Inc. (“Apple”) nor the names of its contributors may be used to endorse or promote products derived from this software without specific prior written permission.

THIS SOFTWARE IS PROVIDED BY APPLE AND ITS CONTRIBUTORS “AS IS” AND ANY EXPRESS OR IMPLIED WARRANTIES, INCLUDING, BUT NOT LIMITED TO, THE IMPLIED WARRANTIES OF MERCHANTABILITY AND FITNESS FOR A PARTICULAR PURPOSE ARE DISCLAIMED. IN NO EVENT SHALL APPLE OR ITSCONTRIBUTORS BE LIABLE FOR ANY DIRECT, INDIRECT, INCIDENTAL, SPECIAL, EXEMPLARY, OR CONSEQUENTIAL DAMAGES (INCLUDING, BUT NOT LIMITED TO, PROCUREMENT OF SUBSTITUTE GOODS OR SERVICES; LOSS OF USE, DATA, OR PROFITS; OR BUSINESS INTERRUPTION) HOWEVER CAUSED AND ON ANY THEORY OF LIABILITY, WHETHER IN CONTRACT, STRICT LIABILITY, OR TORT (INCLUDING NEGLIGENCE OR OTHERWISE) ARISING IN ANY WAY OUT OF THE USE OF THIS SOFTWARE, EVEN IF ADVISED OF THE POSSIBILITY OF SUCH DAMAGE.

Part 9: ScienceLogic, LLC copyright notice(BSD)

Copyright (c) 2009, ScienceLogic, LLC

All rights reserved.

Redistribution and use in source and binary forms, with or without modification, are permitted provided that the following conditions aremet: yy Redistributions of source code must retain the above copyright notice, this list of conditions and the following disclaimer. yy Redistributions in binary form must reproduce the above copyright notice, this list of conditions and the following disclaimer in the documentation and/or other materials provided with the distribution. yy Neither the name of ScienceLogic, LLC nor the names of its contributors may be used to endorse or promote products derived from this software without specific prior written permission.

THIS SOFTWARE IS PROVIDED BY THE COPYRIGHT HOLDERS AND CONTRIBUTORS “AS IS” AND ANY EXPRESS OR IMPLIED WARRANTIES, INCLUDING, BUT NOT LIMITED TO, THE IMPLIED WARRANTIES OF MERCHANTABILITY AND FITNESS FOR A PARTICULAR PURPOSE ARE DISCLAIMED. IN NO EVENT SHALL THE COPYRIGHT HOLDERS OR CONTRIBUTORS BE LIABLE FOR ANY DIRECT, INDIRECT, INCIDENTAL, SPECIAL, EXEMPLARY, OR CONSEQUENTIAL DAMAGES (INCLUDING, BUT NOT LIMITED TO, PROCUREMENT OF SUBSTITUTE GOODS OR SERVICES; LOSS OF USE, DATA, OR PROFITS; OR BUSINESS INTERRUPTION) HOWEVER CAUSED AND ON ANY THEORY OF LIABILITY, WHETHER IN CONTRACT, STRICT LIABILITY, OR TORT (INCLUDING NEGLIGENCE OR OTHERWISE) ARISING IN ANY WAY OUT OF THE USE OF THIS SOFTWARE, EVEN IF ADVISED OF THE POSSIBILITY OF SUCH DAMAGE

The MIT License

Some software components of this product incorporate source code covered under the MIT license as follows

MIT License 2.0

- Acewidget, bettermeans, jquery-ui, libxml, libxml2, Mesa3D-MesaLib,mwEmbed,OpenGL Samples Pack, Wide Studio, xorg-server, dropbear-2012.55, ncurses-5.7

Copyright (c) 2011, The Dojo Foundation

Copyright 2010, AUTHORS.txt (http://jqueryui.com/about)

Dual licensed under the MIT or GPL Version 2 licenses.

- http://jquery.org/license

- http://docs.jquery.com/UI/Widget

Copyright Daniel Veillard

Copyright Igor Zlatovic <igor@zlatkovic.com>

Copyright Aleksey Sanin

Copyright Gary Pennington <Gary.Pennington@uk.sun.com>

Copyright Alfred Mickautsch <alfred@mickautsch.de>

Copyright Bjorn Reese <bjorn.reese@systematic.dk>

Copyright Joel W. Reed

Copyright William Brack <wbrack@mmm.com.hk>

Copyright (c) 2007-2010 The Khronos Group Inc.

Copyright Atish Kumar Patra

Copyright (c) 2006 Free Software Foundation, Inc.

Permission is hereby granted, free of charge, to any person obtaining a copy of this software and associated documentation files (the "Software"), to deal in the Software without restriction, including without limitation the rights to use, copy, modify, merge, publish, distribute, sublicense, and/or sell copies of the Software, and to permit persons to whom the Software is furnished to do so, subject to the following conditions:

The above copyright notice and this permission notice shall be included in all copies or substantial portions of the Software.

THE SOFTWARE IS PROVIDED "AS IS", WITHOUT WARRANTY OF ANY KIND, EXPRESS OR IMPLIED, INCLUDING BUT NOT LIMITED TO THE WARRANTIES OF MERCHANTABILITY, FITNESS FOR A PARTICULAR PURPOSE AND NONINFRINGEMENT. IN NO EVENT SHALL THE AUTHORS OR COPYRIGHT HOLDERS BE LIABLE FOR ANY CLAIM, DAMAGES OR OTHER LIABILITY, WHETHER IN AN ACTION OF CONTRACT, TORT OR OTHERWISE, ARISING FROM, OUT OF OR IN CONNECTION WITH THE SOFTWARE OR THE USE OR OTHER DEALINGS IN THE SOFTWARE.

Mozilla Public License

Since we, at Hanwha Vision, used the Mozilla Firefox component without modifying the source code according to the MOZILLA Public license 1.1, we are not obliged to provide the source code of the corresponding component.

- Version 1.1

1. Definitions.

1.0.1. "Commercial Use" means distribution or otherwise making the Covered Code available to a third party.

1.1. "Contributor" means each entity that creates or contributes to the creation of Modifications.

1.2. "Contributor Version" means the combination of the Original Code, prior Modifications used by a Contributor, and the Modifications made by that particular Contributor.

1.3. "Covered Code" means the Original Code or Modifications or the combination of the Original Code and Modifications, in each case including portions thereof.

1.4. "Electronic Distribution Mechanism" means a mechanism generally accepted in the software development community for the electronic transfer of data.

1.5. "Executable" means Covered Code in any form other than Source Code.

1.6. "Initial Developer" means the individual or entity identified as the Initial Developer in the Source Code notice required by Exhibit A.

1.7. "Larger Work" means a work which combines Covered Code or portions thereof with code not governed by the terms of this License.

1.8. "License" means this document.

1.8.1. "Licensable" means having the right to grant, to the maximum extent possible, whether at the time of the initial grant or subsequently acquired, any and all of the rights conveyed herein.

1.9. "Modifications" means any addition to or deletion from the substance or structure of either the Original Code or any previous Modifications. When Covered Code is released as a series of files, a Modification is:

A. Any addition to or deletion from the contents of a file containing Original Code or previous Modifications.

B. Any new file that contains any part of the Original Code or previous Modifications.

1.10. "Original Code" means Source Code of computer software code which is described in the Source Code notice required by Exhibit A as Original Code, and which, at the time of its release under this License is not already Covered Code governed by this License.

1.10.1. "Patent Claims" means any patent claim(s), now owned or hereafter acquired, including without limitation, method, process, and apparatus claims, in any patent Licensable by grantor.

1.11. "Source Code" means the preferred form of the Covered Code for making modifications to it, including all modules it contains, plus any associated interface definition files, scripts used to control compilation and installation of an Executable, or source code differential comparisons against either the Original Code or another well known, available Covered Code of the Contributor's choice. The Source Code can be in a compressed or archival form, provided the appropriate decompression or de-archiving software is widely available for no charge.

1.12. "You" (or "Your") means an individual or a legal entity exercising rights under, and complying with all of the terms of, this License or a future version of this License issued under Section 6.1. For legal entities, "You" includes any entity which controls, is controlled by, or is under common control with You. For purposes of this definition, "control" means (a) the power, direct or indirect, to cause the direction or management of such entity, whether by contract or otherwise, or (b) ownership of more than fifty percent (50%) of the outstanding shares or beneficial ownership of such entity.

2. Source Code License.

2.1. The Initial Developer Grant. The Initial Developer hereby grants You a world-wide, royalty-free, non-exclusive license, subject to third party intellectual property claims:

(a) under intellectual property rights (other than patent or trademark) Licensable by Initial Developer to use, reproduce, modify, display, perform, sublicense and distribute the Original Code (or portions thereof) with or without Modifications, and/or as part of a Larger Work; and

(b) under Patents Claims infringed by the making, using or selling of Original Code, to make, have made, use, practice, sell, and offer for sale, and/or otherwise dispose of the Original Code (or portions thereof).

(c) the licenses granted in this Section 2.1(a) and (b) are effective on the date Initial Developer first distributes Original Code under the terms of this License.

(d) Notwithstanding Section 2.1(b) above, no patent license is granted: 1) for code that You delete from the Original Code; 2) separate from the Original Code; or 3) for infringements caused by: i) the modification of the Original Code or ii) the combination of the Original Code with other software or devices.

2.2. Contributor Grant. Subject to third party intellectual property claims, each Contributor hereby grants You a world-wide, royalty-free, non-exclusive license

(a) under intellectual property rights (other than patent or trademark) Licensable by Contributor, to use, reproduce, modify, display, perform, sublicense and distribute the Modifications created by such Contributor (or portions thereof) either on an unmodified basis, with other Modifications, as Covered Code and/or as part of a Larger Work; and

(b) under Patent Claims infringed by the making, using, or selling of Modifications made by that Contributor either alone and/or in combination with its Contributor Version (or portions of such combination), to make, use, sell, offer for sale, have made, and/or otherwise dispose of: 1) Modifications made by that Contributor (or portions thereof); and 2) the combination of Modifications made by that Contributor with its Contributor Version (or portions of such combination).

(c) the licenses granted in Sections 2.2(a) and 2.2(b) are effective on the date Contributor first makes Commercial Use of the Covered Code.

(d) Notwithstanding Section 2.2(b) above, no patent license is granted: 1) for any code that Contributor has deleted from the Contributor Version; 2) separate from the Contributor Version; 3) for infringements caused by: i) third party modifications of Contributor Version or ii) the combination of Modifications made by that Contributor with other software (except as part of the Contributor Version) or other devices; or 4) under Patent Claims infringed by Covered Code in the absence of Modifications made by that Contributor.

3. Distribution Obligations.

3.1. Application of License. The Modifications which You create or to which You contribute are governed by the terms of this License, including without limitation Section 2.2. The Source Code version of Covered Code may be distributed only under the terms of this License or a future version of this License released under Section 6.1, and You must include a copy of this License with every copy of the Source Code You distribute. You may not offer or impose any terms on any Source Code version that alters or restricts the applicable version of this License or the recipients' rights hereunder. However, You may include an additional document offering the additional rights described in Section 3.5.

3.2. Availability of Source Code. Any Modification which You create or to which You contribute must be made available in Source Code form under the terms of this License either on the same media as an Executable version or via an accepted Electronic Distribution Mechanism to anyone to whom you made an Executable version available; and if made available via Electronic Distribution Mechanism, must remain available for at least twelve (12) months after the date it initially became available, or at least six (6) months after a subsequent version of that particular Modification has been made available to such recipients. You are responsible for ensuring that the Source Code version remains available even if the Electronic Distribution Mechanism is maintained by a third party.

3.3. Description of Modifications. You must cause all Covered Code to which You contribute to contain a file documenting the changes You made to create that Covered Code and the date of any change. You must include a prominent statement that the Modification is derived, directly or indirectly, from Original Code provided by the Initial Developer and including the name of the Initial Developer in (a) the Source Code, and (b) in any notice in an Executable version or related documentation in which You describe the origin or ownership of the Covered Code.

3.4. Intellectual Property Matters

(a) Third Party Claims. If Contributor has knowledge that a license under a third party's intellectual property rights is required to exercise the rights granted by such Contributor under Sections 2.1 or 2.2, Contributor must include a text file with the Source Code distribution titled "LEGAL" which describes the claim and the party making the claim in sufficient detail that a recipient will know whom to contact. If Contributor obtains such knowledge after the Modification is made available as described in Section 3.2, Contributor shall promptly modify the LEGAL file in all copies Contributor makes available thereafter and shall take other steps (such as notifying appropriate mailing lists or newsgroups) reasonably calculated to inform those who received the Covered Code that new knowledge has been obtained.

(b) Contributor APIs. If Contributor's Modifications include an application programming interface and Contributor has knowledge of patent licenses which are reasonably necessary to implement that API, Contributor must also include this information in the LEGAL file.

(c) Representations.

Contributor represents that, except as disclosed pursuant to Section 3.4(a) above, Contributor believes that Contributor's Modifications are Contributor's original creation(s) and/or Contributor has sufficient rights to grant the rights conveyed by this License.

3.5. Required Notices. You must duplicate the notice in Exhibit A in each file of the Source Code. If it is not possible to put such notice in a particular Source Code file due to its structure, then You must include such notice in a location (such as a relevant directory) where a user would be likely to look for such a notice. If You created one or more Modification(s) You may add your name as a Contributor to the notice described in Exhibit A. You must also duplicate this License in any documentation for the Source Code where You describe recipients' rights or ownership rights relating to Covered Code. You may choose to offer, and to charge a fee for, warranty, support, indemnity or liability obligations to one or more recipients of Covered Code. However, You may do so only on Your own behalf, and not on behalf of the Initial Developer or any Contributor. You must make it absolutely clear than any such warranty, support, indemnity or liability obligation is offered by You alone, and You hereby agree to indemnify the Initial Developer and every Contributor for any liability incurred by the Initial Developer or such Contributor as a result of warranty, support, indemnity or liability terms You offer.

3.6. Distribution of Executable Versions. You may distribute Covered Code in Executable form only if the requirements of Section 3.1-3.5 have been met for that Covered Code, and if You include a notice stating that the Source Code version of the Covered Code is available under the terms of this License, including a description of how and where You have fulfilled the obligations of Section 3.2. The notice must be conspicuously included in any notice in an Executable version, related documentation or collateral in which You describe recipients' rights relating to the Covered Code. You may distribute the Executable version of Covered Code or ownership rights under a license of Your choice, which may contain terms different from this License, provided that You are in compliance with the terms of this License and that the license for the Executable version does not attempt to limit or alter the recipient's rights in the Source Code version from the rights set forth in this License. If You distribute the Executable version under a different license You must make it absolutely clear that any terms which differ from this License are offered by You alone, not by the Initial Developer or any Contributor. You hereby agree to indemnify the Initial Developer and every Contributor for any liability incurred by the Initial Developer or such Contributor as a result of any such terms You offer.

3.7. Larger Works. You may create a Larger Work by combining Covered Code with other code not governed by the terms of this License and distribute the Larger Work as a single product. In such a case, You must make sure the requirements of this License are fulfilled for the Covered Code.

4. Inability to Comply Due to Statute or Regulation.

If it is impossible for You to comply with any of the terms of this License with respect to some or all of the Covered Code due to statute, judicial order, or regulation then You must: (a) comply with the terms of this License to the maximum extent possible; and (b) describe the limitations and the code they affect. Such description must be included in the LEGAL file described in Section 3.4 and must be included with all distributions of the Source Code. Except to the extent prohibited by statute or regulation, such description must be sufficiently detailed for a recipient of ordinary skill to be able to understand it.

5. Application of this License.

This License applies to code to which the Initial Developer has attached the notice in Exhibit A and to related Covered Code.

6. Versions of the License.

6.1. New Versions. Netscape Communications Corporation (''Netscape") may publish revised and/or new versions of the License from time to time. Each version will be given a distinguishing version number.

6.2. Effect of New Versions. Once Covered Code has been published under a particular version of the License, You may always continue to use it under the terms of that version. You may also choose to use such Covered Code under the terms of any subsequent version of the License published by Netscape. No one other than Netscape has the right to modify the terms applicable to Covered Code created under this License.

6.3. Derivative Works. If You create or use a modified version of this License (which you may only do in order to apply it to code which is not already Covered Code governed by this License), You must (a) rename Your license so that the phrases "Mozilla", "MOZILLAPL", "MOZPL", "Netscape", "MPL", "NPL" or any confusingly similar phrase do not appear in your license (except to note that your license differs from this License) and (b) otherwise make it clear that Your version of the license contains terms which differ from the Mozilla Public License and Netscape Public License. (Filling in the name of the Initial Developer, Original Code or Contributor in the notice described in Exhibit A shall not of themselves be deemed to be modifications of this License.)

7. DISCLAIMER OF WARRANTY.

COVERED CODE IS PROVIDED UNDER THIS LICENSE ON AN "AS IS" BASIS, WITHOUT WARRANTY OF ANY KIND, EITHER EXPRESSED OR IMPLIED, INCLUDING, WITHOUT LIMITATION, WARRANTIES THAT THE COVERED CODE IS FREE OF DEFECTS, MERCHANTABLE, FIT FOR A PARTICULAR PURPOSE OR NON-INFRINGING. THE ENTIRE RISK AS TO THE QUALITY AND PERFORMANCE OF THE COVERED CODE IS WITH YOU. SHOULD ANY COVERED CODE PROVE DEFECTIVE IN ANY RESPECT, YOU (NOT THE INITIAL DEVELOPER OR ANY OTHER CONTRIBUTOR) ASSUME THE COST OF ANY NECESSARY SERVICING, REPAIR OR CORRECTION. THIS DISCLAIMER OF WARRANTY CONSTITUTES AN ESSENTIAL PART OF THIS LICENSE. NO USE OF ANY COVERED CODE IS AUTHORIZED HEREUNDER EXCEPT UNDER THIS DISCLAIMER.

8. TERMINATION.

8.1. This License and the rights granted hereunder will terminate automatically if You fail to comply with terms herein and fail to cure such breach within 30 days of becoming aware of the breach. All sublicenses to the Covered Code which are properly granted shall survive any termination of this License. Provisions which, by their nature, must remain in effect beyond the termination of this License shall survive.

8.2. If You initiate litigation by asserting a patent infringement claim (excluding declatory judgment actions) against Initial Developer or a Contributor (the Initial Developer or Contributor against whom You file such action is referred to as "Participant") alleging that:

(a) such Participant's Contributor Version directly or indirectly infringes any patent, then any and all rights granted by such Participant to You under Sections 2.1 and/or 2.2 of this License shall, upon 60 days notice from Participant terminate prospectively, unless if within 60 days after receipt of notice You either: (i) agree in writing to pay Participant a mutually agreeable reasonable royalty for Your past and future use of Modifications made by such Participant, or (ii) withdraw Your litigation claim with respect to the Contributor Version against such Participant. If within 60 days of notice, a reasonable royalty and payment arrangement are not mutually agreed upon in writing by the parties or the litigation claim is not withdrawn, the rights granted by Participant to You under Sections 2.1 and/or 2.2 automatically terminate at the expiration of the 60 day notice period specified above.

(b) any software, hardware, or device, other than such Participant's Contributor Version, directly or indirectly infringes any patent, then any rights granted to You by such Participant under Sections 2.1(b) and 2.2(b) are revoked effective as of the date You first made, used, sold, distributed, or had made, Modifications made by that Participant.

8.3. If You assert a patent infringement claim against Participant alleging that such Participant's Contributor Version directly or indirectly infringes any patent where such claim is resolved (such as by license or settlement) prior to the initiation of patent infringement litigation, then the reasonable value of the licenses granted by such Participant under Sections 2.1 or 2.2 shall be taken into account in determining the amount or value of any payment or license.

8.4. In the event of termination under Sections 8.1 or 8.2 above, all end user license agreements (excluding distributors and resellers) which have been validly granted by You or any distributor hereunder prior to termination shall survive termination.

9. LIMITATION OF LIABILITY.

UNDER NO CIRCUMSTANCES AND UNDER NO LEGAL THEORY, WHETHER TORT (INCLUDING NEGLIGENCE), CONTRACT, OR OTHERWISE, SHALL YOU, THE INITIAL DEVELOPER, ANY OTHER CONTRIBUTOR, OR ANY DISTRIBUTOR OF COVERED CODE, OR ANY SUPPLIER OF ANY OF SUCH PARTIES, BE LIABLE TO ANY PERSON FOR ANY INDIRECT, SPECIAL, INCIDENTAL, OR CONSEQUENTIAL DAMAGES OF ANY CHARACTER INCLUDING, WITHOUT LIMITATION, DAMAGES FOR LOSS OF GOODWILL, WORK STOPPAGE, COMPUTER FAILURE OR MALFUNCTION, OR ANY AND ALL OTHER COMMERCIAL DAMAGES OR LOSSES, EVEN IF SUCH PARTY SHALL HAVE BEEN INFORMED OF THE POSSIBILITY OF SUCH DAMAGES. THIS LIMITATION OF LIABILITY SHALL NOT APPLY TO LIABILITY FOR DEATH OR PERSONAL INJURY RESULTING FROM SUCH PARTY'S NEGLIGENCE TO THE EXTENT APPLICABLE LAW PROHIBITS SUCH LIMITATION. SOME JURISDICTIONS DO NOT ALLOW THE EXCLUSION OR LIMITATION OF INCIDENTAL OR CONSEQUENTIAL DAMAGES, SO THIS EXCLUSION AND LIMITATION MAY NOT APPLY TO YOU. 10. U.S. GOVERNMENT END USERS.

The Covered Code is a "commercial item," as that term is defined in 48 C.F.R. 2.101 (Oct. 1995), consisting of "commercial computer software" and "commercial computer software documentation," as such terms are used in 48 C.F.R. 12.212 (Sept. 1995). Consistent with 48 C.F.R. 12.212 and 48 C.F.R. 227.7202-1 through 227.7202-4 (June 1995), all U.S. Government End Users acquire Covered Code with only those rights set forth herein.

11. MISCELLANEOUS.

This License represents the complete agreement concerning subject matter hereof. If any provision of this License is held to be unenforceable, such provision shall be reformed only to the extent necessary to make it enforceable. This License shall be governed by California law provisions (except to the extent applicable law, if any, provides otherwise), excluding its conflictof-law provisions. With respect to disputes in which at least one party is a citizen of, or an entity chartered or registered to do business in the United States of America, any litigation relating to this License shall be subject to the jurisdiction of the Federal Courts of the Northern District of California, with venue lying in Santa Clara County, California, with the losing party responsible for costs, including without limitation, court costs and reasonable attorneys' fees and expenses. The application of the United Nations Convention on Contracts for the International Sale of Goods is expressly excluded. Any law or regulation which

provides that the language of a contract shall be construed against the drafter shall not apply to this License.

12. RESPONSIBILITY FOR CLAIMS.

As between Initial Developer and the Contributors, each party is responsible for claims and damages arising, directly or indirectly, out of its utilization of rights under this License and You agree to work with Initial Developer and Contributors to distribute such responsibility on an equitable basis. Nothing herein is intended or shall be deemed to constitute any admission of liability.

13. MULTIPLE-LICENSED CODE.

Initial Developer may designate portions of the Covered Code as Multiple-Licensed. Multiple-Licensedmeans that the Initial Developer permits you to utilize portions of the Covered Code under Your choice of the MPL or the alternative licenses, if any, specified by the Initial Developer in the file described in Exhibit A.

EXHIBIT A -Mozilla Public License.

The contents of this file are subject to the Mozilla Public License Version 1.1 (the "License"); you may not use this file except in compliance with the License. You may obtain a copy of the License at http://www.mozilla.org/MPL/Software distributed under the License is distributed on an "AS IS" basis, WITHOUT WARRANTY OF ANY KIND, either express or implied. See the License for the specific language governing rights and limitations under the License.

The Original Code is _____.

The Initial Developer of the Original Code is _____. Portions created by _____ are Copyright (C) _____ _____. All Rights Reserved.

Contributor(s): _____.

Alternatively, the contents of this file may be used under the terms of the _____ license (the [___] License), in which case the provisions of [_____] License are applicable instead of those above. If you wish to allow use of your version of this file only under the terms of the [____] License and not to allow others to use your version of this file under the MPL, indicate your decision by deleting the provisions above and replace them with the notice and other provisions required by the [___] License. If you do not delete the provisions above, a recipient may use your version of this file under either the MPL or the [___] License."

[NOTE: The text of this Exhibit A may differ slightly from the text of the notices in the Source Code files of the Original Code. You should use the text of this Exhibit A rather than the text found in the Original Code Source Code for Your Modifications

The Independent JPEG Group's JPEG Software

The software included in this product contains copyrighted software that is licensed under the JPEG license.

- JPEG license
  - Code project . Generating Outline OpenGL, Libjpeg

This distribution contains the sixth public release of the Independent JPEG Group's free JPEG software. You are welcome to redistribute this software and to use it for any purpose, subject to the conditions under LEGAL ISSUES, below.

Serious users of this software (particularly those incorporating it into larger programs) should contact IJG at jpeg-info@uunet.uu.net to be added to our electronic mailing list. Mailing list members are notified of updates and have a chance to participate in technical discussions, etc.

This software is the work of Tom Lane, Philip Gladstone, Jim Boucher, Lee Crocker, Julian Minguillon, Luis Ortiz, George Phillips, Davide Rossi, Guido Vollbeding, Ge' Weijers, and other members of the Independent JPEG Group.

IJG is not affiliated with the official ISO JPEG standards committee.

LEGAL ISSUES

==========

In plain English:

1. We don't promise that this software works. (But if you find any bugs, please let us know!)

2. You can use this software for whatever you want. You don't have to pay us.

3. You may not pretend that you wrote this software. If you use it in a program, you must acknowledge somewhere in your documentation that you've used the IJG code.

In legalese:

The authors make NO WARRANTY or representation, either express or implied, with respect to this software, its quality, accuracy, merchantability, or fitness for a particular purpose. This software is provided "AS IS", and you, its user, assume the entire risk as to its quality and accuracy.

This software is copyright (C) 1991-1998, Thomas G. Lane. All Rights Reserved except as specified below.

Permission is hereby granted to use, copy, modify, and distribute this software (or portions thereof) for any purpose, without fee, subject to these conditions:

(1) If any part of the source code for this software is distributed, then this README file must be included, with this copyright and no-warranty notice unaltered; and any additions, deletions, or changes to the original files must be clearly indicated in accompanying documentation.

(2) If only executable code is distributed, then the accompanying documentation must state that "this software is based in part on the work of the Independent JPEG Group".

(3) Permission for use of this software is granted only if the user accepts full responsibility for any undesirable consequences; the authors accept NO LIABILITY for damages of any kind.

These conditions apply to any software derived from or based on the IJG code, not just to the unmodified library. If you use our work, you ought to acknowledge us.

Permission is NOT granted for the use of any IJG author's name or company name in advertising or publicity relating to this software or products derived from it. This software may be referred to only as "the Independent JPEG Group's software".

We specifically permit and encourage the use of this software as the basis of commercial products, provided that all warranty or liability claims are assumed by the product vendor.

ansi2knr.c is included in this distribution by permission of L. Peter Deutsch, sole proprietor of its copyright holder, Aladdin Enterprises of Menlo Park, CA.

ansi2knr.c is NOT covered by the above copyright and conditions, but instead by the usual distribution terms of the Free Software Foundation; principally, that you must include source code if you redistribute it. (See the file ansi2knr.c for full details.) However, since ansi2knr. c is not needed as part of any program generated from the IJG code, this does not limit you more than the foregoing paragraphs do.

The Unix configuration script "configure" was produced with GNU Autoconf. It is copyright by the Free Software Foundation but is freely distributable. The same holds for its supporting scripts (config.guess, config.sub, ltconfig, ltmain. sh). Another support script, install-sh, is copyright by M.I.T. but is also freely distributable.

It appears that the arithmetic coding option of the JPEG spec is covered by patents owned by IBM, AT&T, and Mitsubishi. Hence arithmetic coding cannot legally be used without obtaining one or more licenses. For this reason, support for arithmetic coding has been removed from the free JPEG software. (Since arithmetic coding provides only a marginal gain over the unpatented Huffman mode, it is unlikely that very many implementations will support it.) So far as we are aware, there are no patent restrictions on the remaining code.

The IJG distribution formerly included code to read and write GIF files. To avoid entanglement with the Unisys LZW patent, GIF reading support has been removed altogether, and the GIF writer has been simplified to produce "uncompressed GIFs". This technique does not use the LZW algorithm; the resulting GIF files are larger than usual, but are readable by all standard GIF decoders.

We are required to state that

"The Graphics Interchange Format(c) is the Copyright property of CompuServe Incorporated. GIF(sm) is a Service Mark property of CompuServe Incorporated."

T-Kernel License

- This Product uses the Source Code of T-Kernel under T-License granted by the T-Engine Forum(www.t-engine.org)

T-License [License Agreement for Source Code of T-Kernel]

established by T-Engine Forum
on January 23, 2004
revised on June 17, 2004
revised on December 21, 2006
revised on March 24, 2009

Article 1. Scope of License Agreement

1. This License Agreement sets forth copyrights and the terms and conditions of use applicable to the source code of T-Kernel distributed by T-Engine Forum and any derivative work created therefrom.

Article 2. Definition

1. "T-Kernel" means a real-time operating system controlled and distributed by T-Engine Forum on behalf of the copyright holder thereof.

2. "Source Code" means a source program, including related comments and documentations, for the T-Kernel and the Ported Source Code defined in Article 2.8 which is registered with T-Engine Forum.

3. "Hardware-dependent Part" means the part of the Source Code which depends on hardware and needs to be changed when the Source Code is ported and operated on the target hardware, and is designated and separated as such part.

4. "Compiler-dependent Part" means the part of the Source Code which depends on compiler and needs to be changed when the Source Code is ported and operated on the target hardware, and is designated and separated as such part.

5. "Header File" means the part of the Source Code which contains definitions necessary to develop application programs.

6. "T-Engine Hardware" means the hardware which is manufactured in accordance with the T-Engine Hardware specifications or the μT-Engine Hardware specifications issued by T-Engine Forum, and registered with T-Engine Forum.

7. "Similar Hardware to T-Engine Hardware" means any hardware (including software which emulates hardware) other than that defined in Article 2.6 above, on which the T-Kernel can be operated.

8. "Ported Source Code" means a source program produced from the Source Code by modifying only its Hardwaredependent Part and/or Compiler-dependent Part to enable it to be operated on the T-Engine Hardware or the Similar Hardware to T-Engine Hardware. The Ported Source Code which is registered with T-Engine Forum shall be included in the Source Code.

9. "Modified Source Code" means a source program modified from the Source Code for the purpose of improving its performance, increasing or decreasing its function, and the like. The Ported Source Code shall not be included in the Modified Source Code.

10. "Binary Code" means an executable code form which is created by compiling programs, which include all or part of the Source Code or the Modified Source Code.

11. "Derivative Work" means the Modified Source Code or the Binary Code.

12. "Embedded Product" means any product which operates with executable code form of the Source Code, the Modified Source Code or the Binary Code loaded on its hardware.

13. "End User" means a consumer who uses the Embedded Product.

14. "System Developer" means any person who develops the Embedded Product by itself or has a third party develop the same, and provides, whether with or without payment, the End User with the Embedded Product.

15. "Distributor of Modification" means any person who produces the Modified Source Code and, whether with or without payment, distributes the same to any third party.

16. "Patch for Modification" means a difference, program, system, or the like in order to create the Modified Source Code from the Source Code or the Binary Code thereof.

17. "Vicarious Execution of Patch Processing" means vicarious execution service to create the Modified Source Code applying the Patch for Modification to the Source Code or the Binary Code thereof.

18. "Source Code User" means a person who uses the Source Code.

19. "Distribution" means any of the following acts:

1. to transmit a work to a large number of specific persons through the Internet communication, broadcasting, and the like;

2. to transmit a work to the general public through the Internet communication, broadcasting, and the like automatically in response to a request from the public; and

3. to distribute a copy of a work to the general public or a large number of specific persons.

Article 3. Copyright

1. The copyrights of the Source Code shall be owned by Ken Sakamura.

Article 4. License of Source Code

1. As provided for in this Article, T-Engine Forum shall provide, and grant a license to use, the Source Code free of charge to any person who has taken the necessary procedure for registration as prescribed by T-Engine Forum and agreed to the T-License.

2. The Source Code shall be distributed exclusively by T-Engine Forum. Any person who obtains the Source Code under Article 4.1 above shall not make any re-Distribution of the Source Code.

3. In accordance with the license granted under Article 4.1 above, the Source Code User may perform the following acts:

1. to copy and/or modify the Source Code provided by T-Engine Forum hereunder for its own research, development and the like.

2. to run the Source Code provided by T-Engine Forum hereunder for its own research, development and the like.

3. to run the Source Code modified in accordance with the provision of Article 4.3 (1) above for its own research, development and the like.

4. to distribute the Binary Code created from the Source Code provided by T-Engine Forum hereunder or from the Source Code modified in accordance with the provision of Article 4.3 (1) above.

4. In accordance with the license granted under Article 4.1 above, the System Developer may perform the following acts:

1. to perform any and all acts set forth in the Article 4.3 above.

2. to develop and manufacture the Embedded Product containing the Binary Code, and, whether with or without payment, provide the End User with the same and make the Binary Code available to the End User on the Embedded Product.

5. The Source Code User and the System Developer shall be obligated to give a notice that the Source Code is used, in such a way as separately specified by T-Engine Forum, when they use the Source Code or the Binary Code, or make the Binary Code available for the End User on the Embedded Product.

Article 5. Distribution of Modified Source Code

1. Any of A- members of T-Engine Forum may become the Distributor of Modification by obtaining the approval of T-Engine Forum through the registration procedure as prescribed by the Forum provided that only the department of the A- member which has taken the registration procedure may distribute the Modified Source Code in such a way as provided for in this Article as long as it holds the Amembership.

2. The Distributor of Modification may create the Modified Source Code based on the Source Code provided by T-Engine Forum and the Patch for Modification to be applied to create such Modified Source Code from the Source Code.

3. The Distributor of Modification shall, prior to the distribution, inform T-Engine Forum of and register a name and description of the Modified Source Code in such a way as specified by T-Engine Forum.

4. The Distributor of Modification shall determine the name of the Modified Source Code subject to the rules separately established by T-Engine Forum and publish an appropriate notice as required by the rules on the Patch for Modification and the Modified Source Code.

5. The Distributor of Modification may distribute the Modified Source Code to a third party, whether with or without payment, provided that the Distributor of Modification shall take the necessary measures to prohibit the third party from making the re-Distribution of the Modified Source Code.

6. Developer with the Patch for Modification. Provided, however, that the Distributor of Modification shall be obligated to confirm that the System Developer is the Source Code User duly licensed under Article 4.1.

7. The Distributor of Modification may perform the Vicarious Execution of Patch Processing for the System Developer.

8. The System Developer shall not distribute the Modified Source Code in further modified form to any third party as a stand-alone software product.

9. The System Developer may, under the same obligation as imposed in Article 4.5, make the Embedded Product available for the End User through use of the Patch for Modification distributed by the Distributor of Modification or the Derivative Works obtained through the Vicarious Execution of Patch Processing.

Article 6. Distribution and Registration of the Ported Source Code

1. The Source Code User and the System Developer may, whether with or without charge, distribute to any third party only the following parts of the Ported Source Code on the T-Engine Hardware or the Similar Hardware to T-Engine Hardware:

1. The Hardware-dependent Part and/or Compiler-dependent Part; provided that the Source Code User and the System Developer shall inform T-Engine Forum of, and T-Engine Forum may publish, a method for distributing said Part(s) to third parties.

2. The Header File; provided that the Header File shall be distributed together with the Binary Code of the Ported Source Code.

2. Any member of T-Engine Forum may request T-Engine Forum to register and distribute, as an original source code for T-Kernel, the Ported Source Code on the T-Engine Hardware or the Similar Hardware to T-Engine Hardware.

3. Any member of T-Engine Forum who requests the distribution mentioned in the preceding paragraph shall accede to the following conditions:

1. The member shall confirm that the object hardware is the T-Engine Hardware or the Similar Hardware to T-Engine Hardware.

2. The member shall provide T-Engine Forum with a complete set of operational environment for the object hardware and T-Kernel free of charge when requesting the distribution.

3. The member shall submit test results of the Ported Source Code to T-Engine Forum when requesting the distribution.

4. In the event that T-Engine Forum accepts the request mentioned in Article 6.2, T-Engine Forum shall register and distribute the Ported Source Code as the Source Code for T-Kernel. Provided, however, that the Ported Source Code may be treated in the same way as the Modified Source Code until the time of registration hereunder.

5. The provision set forth in Article 3 shall apply to the Ported Source Code registered in accordance with this Article.

Article 7. Use for Other Purpose

1. Any use of the Source Code, the Modified Source Code or the Ported Source Code other than those stipulated in Articles 4, 5 and 6 shall be subject to the prior approval of T-Engine Forum.

Article 8. Limited Warranty

1. T-Engine Forum and the copyright holder of the Source Code warrant that the Source Code does not infringe third party's copyrights. Provided, however, that T-Engine Forum and the copyright holder of the Source Code make no warranty as to the Hardware-dependent Part and/or Compiler- dependent Part set forth in Article 6.2 in the Ported Source Code by any third party.

2. Neither T-Engine Forum nor the copyright holder of the Source Code warrants that the Source Code will fit for any particular purpose of the Source Code User.

3. Neither T-Engine Forum nor the copyright holder of the Source Code warrants that the Source Code does not infringe any third party's industrial property rights. In no event shall T-Engine Forum and the copyright holder of the Source Code be liable for any dispute which may arise between the Source Code User and a third party in connection with the third party's industrial property rights.

Article 9. Indemnity

1. Neither T-Engine Forum nor the copyright holder of the Source Code shall be liable for any damages (including, but not limited to, damages resulting from loss of profit, business interruption, loss of business information or any other pecuniary damage) arising out of use or impossibility of use of the Source Code, even if T-Engine Forum and the copyright holder have been informed of the possibility of such damages.

Article 10. Breach of Agreement

1. In case that T-Engine Forum considers that this License Agreement is breached or that the popularization of T-Kernel is obstructed, T-Engine Forum shall take measures to correct such breach or such obstruction, take measures on the ground of copyright infringement, or take any other necessary measures against the breaching person or the obstructing person, regardless of whether or not the said person is a member of T-Engine Forum.

2. In case of breach of this License Agreement by a member of T-Engine Forum, T-Engine Forum may take appropriate measures against the member; for example, the member is disqualified from membership, depending on what kind of breach has been committed by it.

3. Any legal dispute which may arise in relation to any breach of this License Agreement shall be subject to the exclusive jurisdiction of the Tokyo District Court.

Article 11. Governing Law and Language

1. This License Agreement shall be governed by and interpreted under the laws of Japan.

2. This License Agreement is executed in both Japanese text and English text provided that the Japanese text shall govern the interpretation and performance of this License Agreement.

Apache License 2.0

Component	Name License	URL
mDNSResponder_bonjour	Apache License 2.0	http://www.apache.org/licenses/LICENSE-2.0

TERMS AND CONDITIONS FOR USE, REPRODUCTION, AND DISTRIBUTION

1. Definitions.

"License" shall mean the terms and conditions for use, reproduction, and distribution as defined by Sections 1 through 9 of this document.

"Licensor" shall mean the copyright owner or entity authorized by the copyright owner that is granting the License.

"Legal Entity" shall mean the union of the acting entity and all other entities that control, are controlled by, or are under common control with that entity. For the purposes of this definition, "control" means (i) the power, direct or indirect, to cause the direction or management of such entity, whether by contract or otherwise, or (ii) ownership of fifty percent (50%) or more of the outstanding shares, or (iii) beneficial ownership of such entity.

"You" (or "Your") shall mean an individual or Legal Entity exercising permissions granted by this License. "Source" form shall mean the preferred form for making modifications, including but not limited to software source code, documentation source, and configuration files.

"Object" form shall mean any form resulting from mechanical transformation or translation of a Source form, including but not limited to compiled object code, generated documentation, and conversions to other media types.

"Work" shall mean the work of authorship, whether in Source or Object form, made available under the License, as indicated by a copyright notice that is included in or attached to the work (an example is provided in the Appendix below).

"Derivative Works" shall mean any work, whether in Source or Object form, that is based on (or derived from) the Work and for which the editorial revisions, annotations, elaborations, or other modifications represent, as a whole, an original work of authorship. For the purposes of this License, Derivative Works shall not include works that remain separable from, or merely link (or bind by name) to the interfaces of, the Work and Derivative Works thereof.

"Contribution" shall mean any work of authorship, including the original version of the Work and any modifications or additions to that Work or Derivative Works thereof, that is intentionally submitted to Licensor for inclusion in the Work by the copyright owner or by an individual or Legal Entity authorized to submit on behalf of the copyright owner. For the purposes of this definition, "submitted" means any form of electronic, verbal, or written communication sent to the Licensor or its representatives, including but not limited to communication on electronic mailing lists, source code control systems, and issue tracking systems that are managed by, or on behalf of, the Licensor for the purpose of discussing and improving the Work, but excluding communication that is conspicuously marked or otherwise designated in writing by the copyright owner as "Not a Contribution." "Contributor" shall mean Licensor and any individual or Legal Entity on behalf of whom a Contribution has been received by Licensor and subsequently incorporated within the Work.

2. Grant of Copyright License. Subject to the terms and conditions of this License, each Contributor hereby grants to You a perpetual, worldwide, non-exclusive, no-charge, royalty-free, irrevocable copyright license to reproduce, prepare Derivative Works of, publicly display, publicly perform, sublicense, and distribute the Work and such Derivative Works in Source or Object form.

3. Grant of Patent License. Subject to the terms and conditions of this License, each Contributor hereby grants to You a perpetual, worldwide, non-exclusive, no-charge, royaltyfree, irrevocable (except as stated in this section) patent license to make, have made, use, offer to sell, sell, import, and otherwise transfer the Work, where such license applies only to those patent claims licensable by such Contributor that are necessarily infringed by their Contribution(s) alone or by combination of their Contribution(s) with the Work to which such Contribution(s) was submitted. If You institute patent litigation against any entity (including a crossclaim or counterclaim in a lawsuit) alleging that the Work or a Contribution incorporated within the Work constitutes direct or contributory patent infringement, then any patent licenses granted to You under this License for that Work shall terminate as of the date such litigation is filed.

4. Redistribution. You may reproduce and distribute copies of the Work or Derivative Works thereof in any medium, with or without modifications, and in Source or Object form, provided that You meet the following conditions:

(a) You must give any other recipients of the Work or Derivative Works a copy of this License; and

(b) You must cause any modified files to carry prominent notices stating that You changed the files; and

(c) You must retain, in the Source form of any Derivative Works that You distribute, all copyright, patent, trademark, and attribution notices from the Source form of the Work, excluding those notices that do not pertain to any part of the Derivative Works; and

(d) If the Work includes a "NOTICE" text file as part of its distribution, then any Derivative Works that You distribute must include a readable copy of the attribution notices contained within such NOTICE file, excluding those notices that do not pertain to any part of the Derivative Works, in at least one of the following places: within a NOTICE text file distributed as part of the Derivative Works; within the Source form or documentation, if provided along with the Derivative Works; or, within a display generated by the Derivative Works, if and wherever such third-party notices normally appear. The contents of the NOTICE file are for informational purposes only and do not modify the License. You may add Your own attribution notices within Derivative Works that You distribute, alongside or as an addendum to the NOTICE text from the Work, provided that such additional attribution notices cannot be construed as modifying the License.

You may add Your own copyright statement to Your modifications and may provide additional or different license terms and conditions for use, reproduction, or distribution of Your modifications, or for any such Derivative Works as a whole, provided Your use, reproduction, and distribution of the Work otherwise complies with the conditions stated in this License.

5. Submission of Contributions. Unless You explicitly state otherwise, any Contribution intentionally submitted for inclusion in the Work by You to the Licensor shall be under the terms and conditions of this License, without any additional terms or conditions. Notwithstanding the above, nothing herein shall supersede or modify the terms of any separate license agreement you may have executed with Licensor regarding such Contributions.

6. Trademarks. This License does not grant permission to use the trade names, trademarks, service marks, or product names of the Licensor, except as required for reasonable and customary use in describing the origin of the Work and reproducing the content of the NOTICE file.

7. Disclaimer of Warranty. Unless required by applicable law or agreed to in writing, Licensor provides the Work (and eachContributor provides its Contributions) on an "AS IS" BASIS, WITHOUT WARRANTIES OR CONDITIONS OF ANY KIND, either express or implied, including, without limitation, any warranties or conditions of TITLE, NONINFRINGEMENT, MERCHANTABILITY, or FITNESS FOR A PARTICULAR PURPOSE. You are solely responsible for determining the appropriateness of using or redistributing the Work and assume any risks associated with Your exercise of permissions under this License.

8. Limitation of Liability. In no event and under no legal theory, whether in tort (including negligence), contract, or otherwise, unless required by applicable law (such as deliberate and grossly negligent acts) or agreed to in writing, shall any Contributor be liable to You for damages, including any direct, indirect, special, incidental, or consequential damages of any character arising as a result of this License or out of the use or inability to use the Work (including but not limited to damages for loss of goodwill, work stoppage, computer failure or malfunction, or any and all other commercial damages or losses), even if such Contributor has been advised of the possibility of such damages.

9. Accepting Warranty or Additional Liability. While redistributing the Work or Derivative Works thereof, You may choose to offer, and charge a fee for, acceptance of support, warranty, indemnity, or other liability obligations and/or rights consistent with this License. However, in accepting such obligations, You may act only on Your own behalf and on Your sole responsibility, not on behalf of any other Contributor, and only if You agree to indemnify, defend, and hold each Contributor harmless for any liability incurred by, or claims asserted against, such Contributor by reason of your accepting any such warranty or additional liability.

END OF TERMS AND CONDITIONS

APPENDIX: How to apply the Apache License to your work.

To apply the Apache License to your work, attach the following boilerplate notice, with the fields enclosed by brackets "[]" replaced with your own identifying information. (Don't include the brackets!) The text should be enclosed in the appropriate comment syntax for the file format. We also recommend that a file or class name and description of purpose be included on the same "printed page" as the copyright notice for easier identification within third-party archives.

Copyright [yyyy] [name of copyright owner]

Licensed under the Apache License, Version 2.0 (the "License"); you may not use this file except in compliance with the License. You may obtain a copy of the License at http://www.apache.org/licenses/LICENSE-2.0

Unless required by applicable law or agreed to in writing, software distributed under the License is distributed on an "AS IS" BASIS, WITHOUT WARRANTIES OR CONDITIONS OF ANY KIND, either express or implied. See the License for the specific language governing permissions and limitations under the License.

BZip2 License

This program, "bzip2", the associated library "libbzip2", and all documentation, are copyright (C) 1996-2007 Julian R Seward. All rights reserved.

Component Name	License	URL
bzip2-1.0.6	Bzip2	http://www.bzip.org/

Redistribution and use in source and binary forms, with or without modification, are permitted provided that the following conditions are met:

1. Redistributions of source code must retain the above copyright notice, this list of conditions and the following disclaimer.

2. The origin of this software must not be misrepresented; you must not claim that you wrote the original software. If you use this software in a product, an acknowledgment in the product documentation would be appreciated but is not required.

3. Altered source versions must be plainly marked as such, and must not be misrepresented as being the original software.

4. The name of the author may not be used to endorse or promote products derived from this software without specific prior written permission.

THIS SOFTWARE IS PROVIDED BY THE AUTHOR ``AS IS'' AND ANY EXPRESS OR IMPLIED WARRANTIES, INCLUDING, BUT NOT LIMITED TO, THE IMPLIED WARRANTIES OF MERCHANTABILITY AND FITNESS FOR A PARTICULAR PURPOSE ARE DISCLAIMED. IN NO EVENT SHALL THE AUTHOR BE LIABLE FOR ANY DIRECT, INDIRECT, INCIDENTAL, SPECIAL, EXEMPLARY, OR CONSEQUENTIAL DAMAGES (INCLUDING, BUT NOT LIMITED TO, PROCUREMENT OF SUBSTITUTE GOODS OR SERVICES; LOSS OF USE, DATA, OR PROFITS; OR BUSINESS INTERRUPTION) HOWEVER CAUSED AND ON ANY THEORY OF LIABILITY, WHETHER IN CONTRACT, STRICT LIABILITY, OR TORT (INCLUDING NEGLIGENCE OR OTHERWISE) ARISING IN ANY WAY OUT OF THE USE OF THIS SOFTWARE, EVEN IF ADVISED OF THE POSSIBILITY OF SUCH DAMAGE.

Julian Seward, jseward@bzip.org

bzip2/libbzip2 version 1.0.5 of 10 December 2007

University of Illinois / NCSA Open Source License

Copyright (c) 1999-2007, The Board of Trustees of the University of Illinois All Rights Reserved.

Component Name	License
iperf-2.0.5	University of Illinois / NCSA Open Source

Iperf performance test

Mark Gates

Ajay Tirumala

Jim Ferguson

Jon Dugan

Feng Qin

Kevin Gibbs

John Estabrook

National Laboratory for Applied Network Research

National Center for Supercomputing Applications

University of Illinois at Urbana-Champaign

http://www.ncsa.uiuc.edu

Permission is hereby granted, free of charge, to any person obtaining a copy of this software (Iperf) and associated documentation files (the "Software"), to deal in the Software without restriction, including without limitation the rights to use, copy, modify, merge, publish, distribute, sublicense, and/or sell copies of the Software, and to permit persons to whom the Software is furnished to do so, subject to the following conditions:

Redistributions of source code must retain the above copyright notice, this list of conditions and the following disclaimers.

Redistributions in binary form must reproduce the above copyright notice, this list of conditions and the following disclaimers in the documentation and/or other materials provided with the distribution.

Neither the names of the University of Illinois, NCSA, nor the names of its contributors may be used to endorse or promote products derived from this Software without specific prior written permission. THE SOFTWARE IS PROVIDED "AS IS", WITHOUT WARRANTY OF ANY KIND, EXPRESS OR IMPLIED, INCLUDING BUT NOT LIMITED TO THE WARRANTIES OF MERCHANTABILITY, FITNESS FOR A PARTICULAR PURPOSE AND NONINFRINGEMENT. IN NO EVENT SHALL THE CONTIBUTORS OR COPYRIGHT HOLDERS BE LIABLE FOR ANY CLAIM, DAMAGES OR OTHER LIABILITY, WHETHER IN AN ACTION OF CONTRACT, TORT OR OTHERWISE, ARISING FROM, OUT OF OR IN CONNECTION WITH THE SOFTWARE OR THE USE OR OTHER DEALINGS IN THE SOFTWARE.

PHP 3.01 License

The PHP License, version 3.01 Copyright (c) 1999 - 2010 The PHP Group. All rights reserved.

Component Name	License	URL
php-5.2.17	PHP 3.01	http://www.php.net/distributions

Redistribution and use in source and binary forms, with or without modification, is permitted provided that the following conditions are met:

1. Redistributions of source code must retain the above copyright notice, this list of conditions and the following disclaimer.

2. Redistributions in binary form must reproduce the above copyright notice, this list of conditions and the following disclaimer in the documentation and/or other materials provided with the distribution.

3. The name "PHP" must not be used to endorse or promote products derived from this software without prior written permission. For written permission, please contact group@php.net.

4. Products derived from this software may not be called "PHP", nor may "PHP" appear in their name, without prior written permission from group@php.net. You may indicate that your software works in conjunction with PHP by saying "Foo for PHP" instead of calling it "PHP Foo" or "phpfoo"

5. The PHP Group may publish revised and/or new versions of the license from time to time. Each version will be given a distinguishing version number. Once covered code has been published under a particular version of the license, you may always continue to use it under the terms of that version. You may also choose to use such covered code under the terms of any subsequent version of the license published by the PHP Group. No one other than the PHP Group has the right to modify the terms applicable to covered code created under this License.

6. Redistributions of any form whatsoever must retain the following acknowledgment: "This product includes PHP software, freely available from <http://www.php.net/software/>".

THIS SOFTWARE IS PROVIDED BY THE PHP DEVELOPMENT TEAM ``AS IS'' AND ANY EXPRESSED OR IMPLIED WARRANTIES, INCLUDING, BUT NOT LIMITED TO, THE IMPLIED WARRANTIES OF MERCHANTABILITY AND FITNESS FOR A PARTICULAR PURPOSE ARE DISCLAIMED. IN NO EVENT SHALL THE PHP DEVELOPMENT TEAM OR ITS CONTRIBUTORS BE LIABLE FOR ANY DIRECT, INDIRECT, INCIDENTAL, SPECIAL, EXEMPLARY, OR CONSEQUENTIAL DAMAGES (INCLUDING, BUT NOT LIMITED TO, PROCUREMENT OF SUBSTITUTE GOODS OR SERVICES; LOSS OF USE, DATA, OR PROFITS; OR BUSINESS INTERRUPTION) HOWEVER CAUSED AND ON ANY THEORY OF LIABILITY, WHETHER IN CONTRACT, STRICT LIABILITY, OR TORT (INCLUDING NEGLIGENCE OR OTHERWISE) ARISING IN ANY WAY OUT OF THE USE OF THIS SOFTWARE, EVEN IF ADVISED OF THE POSSIBILITY OF SUCH DAMAGE.

This software consists of voluntary contributions made by many individuals on behalf of the PHP Group. The PHP Group can be contacted via Email at group@php.net.

For more information on the PHP Group and the PHP project, please see <http://www.php.net>. PHP includes the Zend Engine, freely available at <http://www.zend.com>.

zlib / libpng License

This software is provided 'as-is', without any express or implied warranty. In no event will the authors be held liable for any damages arising from the use of this software.

Component Name	License	URL
zlib-1.2.8	zlib / libpng	http://zlib.net/

Copyright (C) 1995-2010 Jean-loup Gailly and Mark Adler

Permission is granted to anyone to use this software for any purpose, including commercial applications, and to alter it and redistribute it freely, subject to the following restrictions:

1. The origin of this software must not be misrepresented; you must not claim that you wrote the original software. If you use this software in a product, an acknowledgment in the product documentation would be appreciated but is not required.

2. Altered source versions must be plainly marked as such, and must not be misrepresented as being the original software.

3. This notice may not be removed or altered from any source distribution.

Jean-loup Gailly Mark Adler

jloup@gzip.org madler@alumni.caltech.edu

The data format used by the zlib library is described by RFCs (Request for Comments) 1950 to 1952 in the files http://www.ietf.org/rfc/rfc1950.txt (zlib format), rfc1951.txt (deflate format) and rfc1952.txt (gzip format).

Portions of this software are copyright 1996-2002 The FreeType Project (www.freetype.org). All rights reserved.

eco
RoHS compliant

Компания Hanwha Vision заботится об окружающей среде и прилагает усилия для ее сохранения на всех этапах производства и предоставляет потребителям экологически безопасную продукцию.
Знак Eco демонстрирует цель компании Hanwha Vision по созданию экологически безопасной продукции и указывает на соответствие изделия директиве ЕС RoHS.

Правильная утилизация данного устройства (Утилизация электрического и электронного оборудования)

(Действует во всех странах Европейского Союза и других странах Европы, принявших систему разделения отходов)

Подобная маркировка на изделии, принадлежностях или в руководстве к нему предупреждает, что по истечении срока службы изделие или электронные принадлежности для него (например, зарядное устройство, наушники, кабель USB) не следует выбрасывать вместе с другим бытовым мусором. Чтобы избежать вредного воздействия на окружающую среду или на здоровье человека от неконтролируемой утилизации отходов, следует отделять маркированные подобным образом изделия от другого мусора для соответствующей переработки и повторного использования в качестве сырья.
За подробной информацией о месте и способе экологически безопасной утилизации бытовым потребителям следует обращаться к продавцу данного изделия или в органы местного самоуправления.
Промышленным потребителям необходимо обратиться к поставщику, чтобы уточнить сроки и условия договора купли-продажи. Подобные изделия и электронные принадлежности не следует утилизировать вместе с другими производственными отходами.

Правила утилизации батарей данного изделия

(Действительны в Европейском Союзе и иных европейских странах с системами раздельной утилизации.)

Данная маркировка на батарее или упаковке указывает на запрет утилизации изделия с иными бытовыми отходами по окончании срока службы. При наличии маркировки, химические символы Hg, Cd или Pb указывают на содержание в батарее ртути, кадмия или свинца выше контрольных уровней, Указанных в директиве ЕС 2006/66. При неправильной утилизации батарей, данные вещества могут нанести вред здоровью человека или окружающей среде. Для защиты природных ресурсов и поддержки повторного использования материалов рекомендуется хранить батареи отдельно от других типов отходов и утилизировать их через местную систему бесплатного возврата батарей.
Замена аккумуляторов, встроенных в данное изделие, пользователем не предусмотрена. Информация по замене аккумуляторов может быть получена у обслуживающей компании.

Подлежит использованию по назначению
в нормальных условиях
Срок службы : 7 лет.