TEST REPORT

CTK Co., Ltd.
(Ho-dong) 113, Yejik-ro, Cheoin-gu, Yongin-shi
Gyeonggi-do KOREA, REPUBLIC OF
Tel: +82-31-339-9970
Fax: +82-31-624-9501

REPORT No.:
CTK-2019-05140

1. Applicant

- Name ..... : Hanwha Techwin Co., Ltd.
- Address ..... : Hanwha Techwin R&D center, 6 Pangyo-ro 319Beon-gil, Bundang-gu, Seongnam-si, Gyeonggi-do, 13488 KOREA
- Date of Receipt ..... : 2018-02-02

2. Manufacturer

- Name ..... : HANWHA TECHWIN (TIANJIN) CO.,LTD.
- Address ..... : No.11 Weiliu Rd,Micro-Electronic Industrial Park,TEDA,Tianjin,300385,People's Republic of China

3. Use of Report ..... : Quality control

4. Test sample / Model ..... : Network Camera / XNO-L6080R

5. Date(s) of test ..... : 2018-02-26

6. Test Standard (Method) used .. : Requested Test Specification of Applicant

7. Testing Environment ..... : Temperature : (25.0 ± 10.0) °C, Humidity : (50 ± 25) %R.H.
Air Pressure: (99.0 ± 2) kPa

8. Results ..... : Reference test results

The results shown in this test report refer only to the sample(s) tested unless otherwise stated.
This report shall not be reproduced except in full without the written approval of CTK

Approval	Tested by: WonHyeon Choi (Signature)	Technical Manager: YenHwang Jung (Signature)

2019-12-24

CTK Co., Ltd.

1. Degrees of protection provided by enclosures for electrical equipment against external mechanical impacts (IK code)

1.1 Test standard: KS C IEC 62262: 2005

1.2 Arrangement of the IK code

IK 10

Code letters (International mechanical protection)

Characteristic numeral (numerals 00 to 10)

1.3 Vertical Hammer

1.3.1 Test equipment

Equipment	Model	Manufacturer	Serial
Vertical Hammer	20J	Kingpo	TX028-1

1.3.2 Test condition

IK code	Impact Energy (J)	Equivalent mass (kg)	Drop height (mm ± 1%)	Application
00	Non-protected	-	-	☐
01	0.14	0.25	56	☐
02	0.20	0.25	80	☐
03	0.35	0.25	140	☐
04	0.50	0.25	200	☐
05	0.70	0.25	280	☐
06	1.00	0.25	400	☐
07	2.00	0.50	400	☐
08	5.00	1.70	300	☐
09	10.00	5.00	200	☐
10	20.00	5.00	400	☒

- Impact times: five times for each of the exposed surface. (Do not impact more than 3 times in the same spot)

1.3.3 Check Item

- Check the operation of the product before / after the test
- External protection Enclosure damage check (except accessories not related to outer protection function)

1.3.5 Test Result

Item	Contents	Result
Operation after the test	Only the enclosure was obtained.	-
External protection Enclosure	No damage	Pass
Comment Related Product certification: IEC 60950-1 Only the enclosure was obtained and the electrical performance could not be verified. Some scratches were generated on the outside of the product.		

Manufacturer's name

Name and address of factory (ies)	1) HANWHA TECHWIN (TIANJIN) CO.,LTD. No.11 Weiliu Rd,Micro-Electronic Industrial Park,TEDA,Tianjin,300385,People's Republic of China 2) D-TECH CO.,LTD. 173-25, Saneop-ro, Gwonseon-gu, Suwon-si, Gyeonggi-do, Korea (Suwon Industrial Complex) 3) HANWHA TECHWIN SECURITY VIETNAM CO.,LTD Lot O-2, Que Vo Industrial Zone extended area, Nam Son commune, Bac Ninh city, Bac Ninh province, Vietnam

Model description

Basic Model ..... :	XNO-L6080R
Series model ..... :	QNO-8080R, XNO-L6085R
Model differences ..... :	Use of the same external shape and materials (case, finishing material, PCB, cable, etc.), differences in electronic parts inside the product.

2. Attachment

2.1 Products

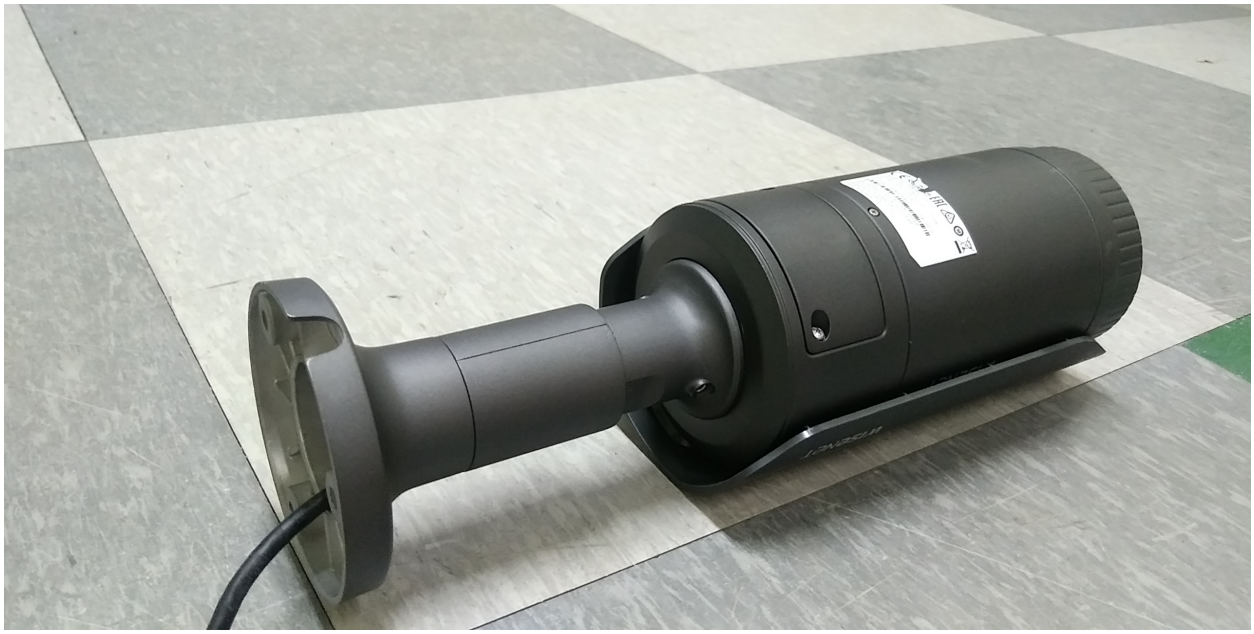

2.2 Test photos

2.3 Photos after test

[P1]

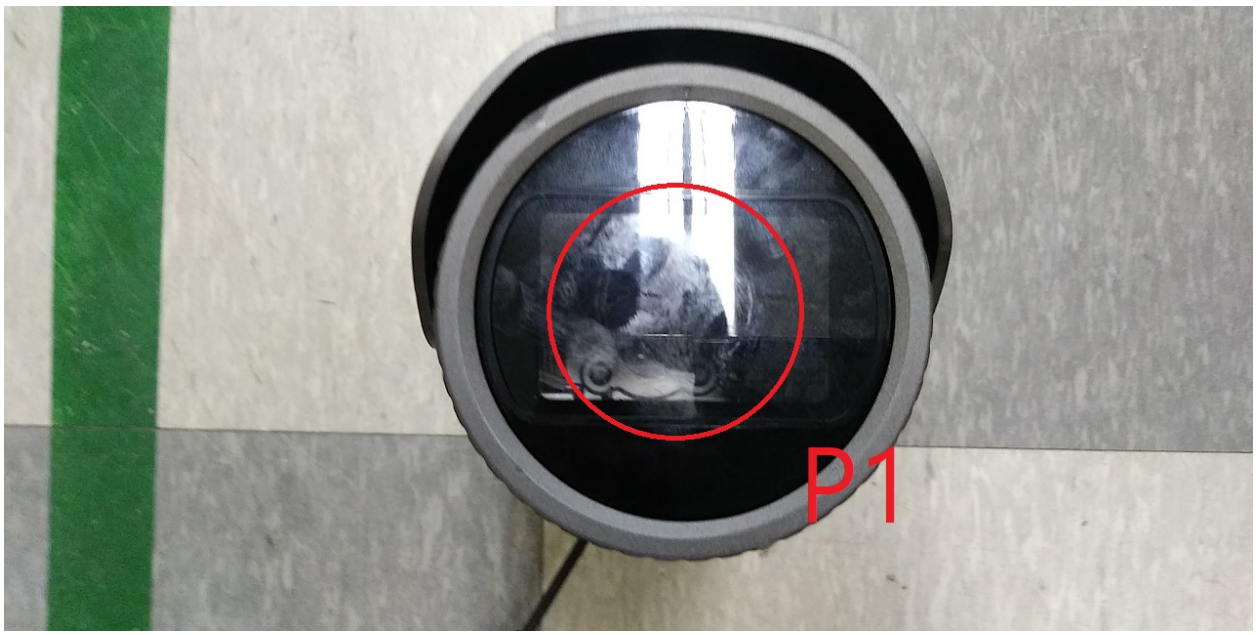

[P2]

[P3] [P4] [P5]

2.4 Enclosure Dimensions or Impact point (Unit: mm)

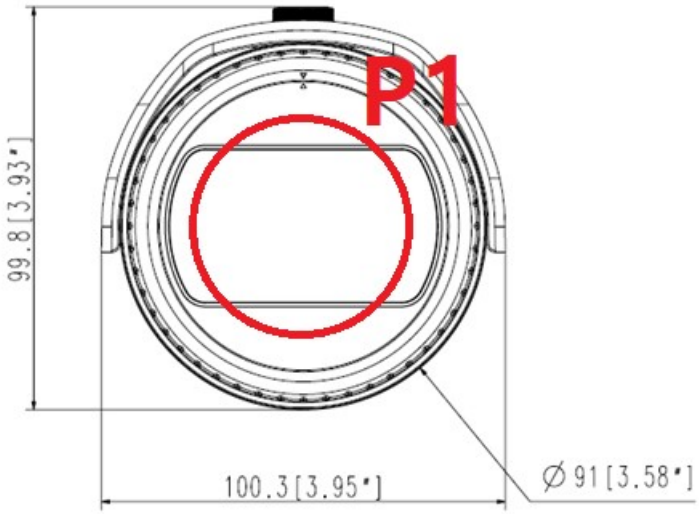

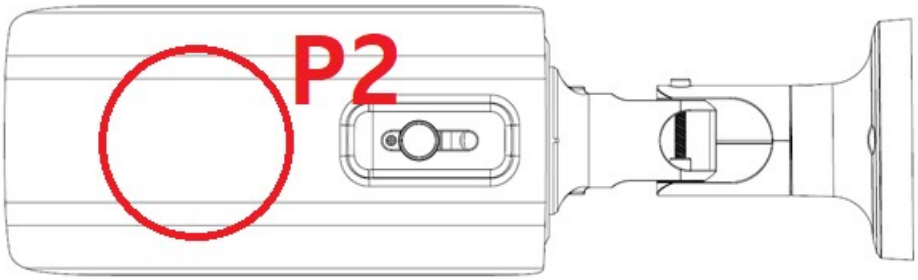

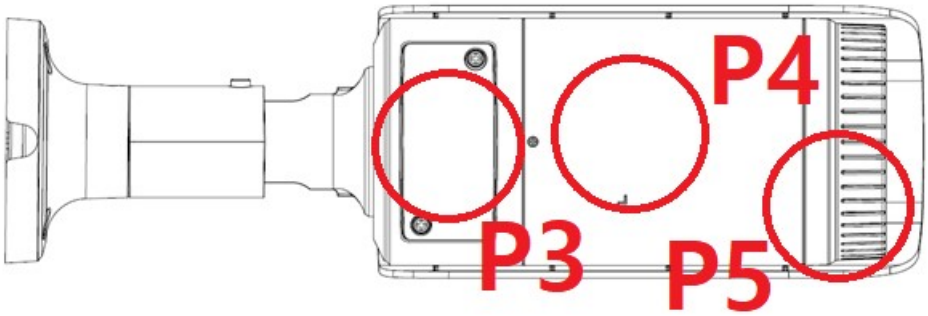
P4
P3
P5

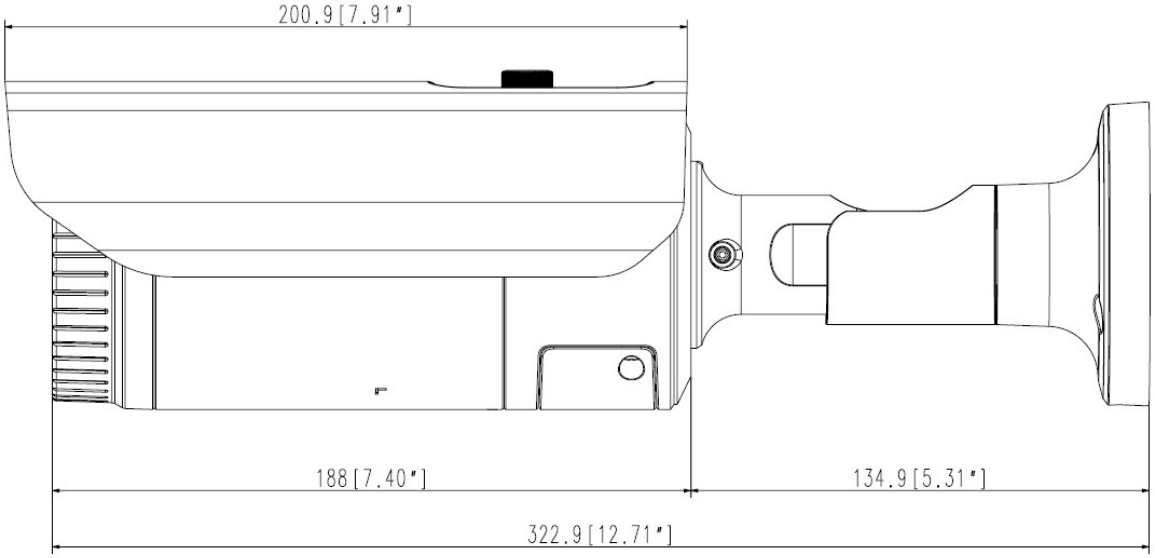
200.9 [7.91"]
188 [7.40"]
134.9 [5.31"]
322.9 [12.71"]

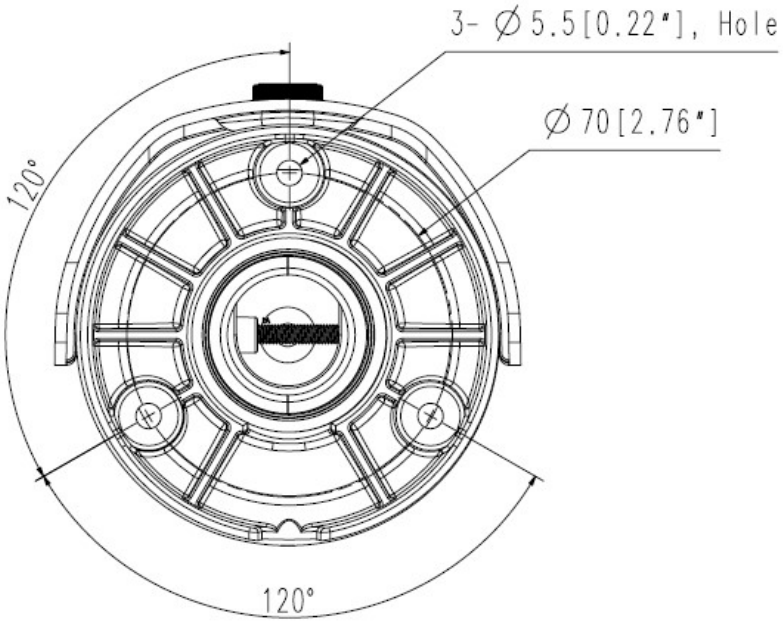
3- ∅5.5[0.22"], Hole
∅70[2.76"]
120°
120°