JEISOON KANG
HANWHA TECHWIN CO LTD
1204 CHANGWON-DAERO SEONGSAN-GU
CHANGWON-SI GYEONGSANGNAM-DO 51542
KOREA

Date:	2018/01/26
Subscriber:	813307003
PartySite:	105140
File No:	E158873
Project No:	4788251011
PD No:	18M03342
Type:	R
PO Number:	KANG, JEISOON

Subject: **Procedure And/Or Report Material**

The following material resulting from the investigation under the above numbers is enclosed.

Issue Date	Vol	Sec	Pages	Revised Date
	X1		Index Page(s)	
2018/01/26	X1	A200	Cert of Compliance	
2018/01/26	X1	A200	Add New Proc/Report Sect	

Ultralink Revision report for E105106-A414 has not been published to DMS. Please confirm that this in generated to DMS before resubmitting to RTC.

Please file revised pages and illustrations in place of material of like identity. New material should be filed in its proper numerical order.

NOTE: Follow-Up Service Procedure revisions DO NOT include Cover Pages, Test Records and Conclusion Pages. Report revisions DO NOT include Authorization Pages, Indices, Section General Pages and Appendixes.

Please review this material and report any inaccuracies to UL's Customer Service Professionals. Contact information for all of UL's global offices can be found at http://ul.com/aboutul/locations.

If you'd like to receive updated materials FASTER, UL offers electronic access and/or delivery of this material. For more details, contact UL's Customer Service Professionals as shown above.

This material is provided on behalf of UL LLC(UL) or any authorized licensee of UL.

SEO File

Index

Product Type	Model/Type Reference	Report Reference #	Status
Digital Video Recorder	SVR-430	E158873-A2-UL	
Video Presenter	UF-80, UF-80DX, UF-80ST	E158873-A4-UL	
Video Presenter	SDP-900DXAN, SDP-950DXAN, SDP-950STAN	E158873-A6-UL	
Video Presenter	SDP-850, SDP-850DX	E158873-A9-UL	
Video Presenter	SDP-6500DXA	E158873-A12-UL	
Video Presenter	UF-130DX	E158873-A14-UL	
Video Presenter	UF-130ST	E158873-A15-UL	
Network Video Recorder	SNR-6400, SNR-3200, SRN-3250, SRN-6450	E158873-A16-UL	
Video Presenter	SDP-860	E158873-A18-UL	
Digital Video Recorder.	SVR-1670	E158873-A19-UL	
UTP Power Supply Unit	SPU-400	E158873-A20-UL	Withdrawn
Digital Video Recorder.	SRD-1630D, SRD-1630, SRD-1610D, SRD-1610, SRD-830D, SRD-830, SRD-1670D, SRD-1670DC, SRD-1670, SRD-1671, SRD-870D, SRD-870DC, SRD-870, SRD-871, SRD-1650D, SRD-1650DC, SRD-1650, SRD-1651, SRD-850D, SRD-850DC, SRD-850, SRD-851, SRD-1630DCP, SRD-1630DCN, SRD-1610DCP, SRD-1610DCN, SRD-830DCP, SRD-830DCN, SRD-####$&@	E158873-A24-UL	
Digital Presenter	SDP-760	E158873-A44-UL	
Network Camera	SNP-5300H*, SNP-6201H* (* is N or P: N = NTSC, P=PAL)	E158873-A45-UL	
Network Camera	SND-7011*, SND-5011*, SND-5061*, SND-7061*, SNV-5010*, SNZ-5200* (* is N or P: N = NTSC, P=PAL)	E158873-A46-UL	
Network Camera	SNP-5300*, SNP-6201* (* is N or P: N = NTSC, P=PAL)	E158873-A47-UL	
Digital Color Camera	SCP-3371H*, SCP-2371H*, SCP-2271H*, SCP-2373H*, SCP-2273H* (* is N or P: N = NTSC, P=PAL)	E158873-A48-UL	
Digital Color Camera	SCP-3371*, SCP-2371*, SCP-2271*, SCP-2373*, SCP-2273* (* is N or P: N = NTSC, P=PAL)	E158873-A49-UL	
Network Camera	SND-7082*, SND-7082F*, SNV-7082* (* is N or P: N = NTSC, P=PAL)	E158873-A50-UL	
Network Camera	SNB-7001*, SNB-5001*, SNB-3002* (* is N or P: N = NTSC, P=PAL)	E158873-A51-UL	
Network Camera	SNO-7082R* (* is N or P: N = NTSC, P=PAL)	E158873-A52-UL	
Network Camera	SNB-7002* (* is N or P: N = NTSC, P=PAL)	E158873-A53-UL	
DIGITAL COLOR CAMERA	SCV-2010F*, SCD-1020R*, SCD-2080R*, SCD-2020R*, SCD-2010*, SCD-2010B*, SCD-2010F*, SCB-3020*, SCB-3021*, SCB-2010*, SCO-1020R* (* is N or P: N=NTSC, P=PAL)	E158873-A54-UL	
Network Camera	SNB-6004*, SNB-6003*, SNB-5004*, SNB-5003*, SNB-7004*, SNB-6005* (* is N or P: N = NTSC, P=PAL)	E158873-A55-UL	

Network Camera	SND-6084*, SND-6083*, SND-5084*, SND-5083*, SND-7084* (* is N or P: N = NTSC, P=PAL)	E158873-A56-UL	
DIGITAL COLOR CAMERA	SCD-2022*, SCD-2022R*, SCD-2042R* (* is N or P: N = NTSC, P=PAL)	E158873-A58-UL	
Digital Color Camera	SCB-2004*, SCB-2005* (* is N or P: N = NTSC, P=PAL);	E158873-A59-UL	
Digital Color Camera	SCD-2082*, SCV-2082R*, SCV-3083*, SCD-3083* (* is N or P: N = NTSC, P=PAL)	E158873-A60-UL	
Network Camera	SND-6084R*, SND-7084R*, SND-5084R* (* is N or P: N = NTSC, P=PAL)	E158873-A61-UL	
NETWORK CAMERA	SNO-6084R*. SNO-7084R* (* is N or P: N = NTSC, P=PAL)	E158873-A62-UL	
Network Camera	SNV-6084R*, SNV-6084*, SNV-5084*, SNV-7084*, SNV-7084R*, SNV-5084R*, SNV-6084T* (* is N or P: N = NTSC, P=PAL)	E158873-A63-UL	
Digital Color Camera	SCO-2081R* (* is N or P: N = NTSC, P=PAL)	E158873-A64-UL	
DIGITAL COLOR CAMERA	SCB-2004*D, SCB-2005*D (* is N or P: N = NTSC, P=PAL)	E158873-A65-UL	
DIGITAL VIDEO RECORDER	SRD-1673D*, SRD-1654D*, SRD-854D*, SRD-852D*, SRD-1673*, SRD-1653*, SRD-873*, SRD-1640*, SRD-840*(* is N or P, N=NTSC / P=PAL)	E158873-A66-UL	
Network Camera	SNP-6200RH*, SCP-2370RH* (* is N or P: N=NTSC,P=PAL)	E158873-A67-UL	
Network Camera	SNV-6012M* (* is N or P: N = NTSC, P=PAL)	E158873-A68-UL	
Network Camera	SNF-7010*, SNF-7010V*, SNF-7010VM* (* is N or P: N = NTSC, P=PAL)	E158873-A69-UL	
Network Camera	SNO-6011R* (* is N or P: N = NTSC, P=PAL)	E158873-A72-UL	
Network Camera	SND-6011R* (* is N or P: N = NTSC, P=PAL)	E158873-A73-UL	
Digital Video Recorder	SRD-1680D*, SRD-880D* (*is N:NTSC / P:PAL)	E158873-A74-UL	
DIGITAL COLOR CAMERA	SCZ-2373*, SCZ-2273* (* is N or P: N = NTSC, P=PAL)	E158873-A75-UL	
NETWORK CAMERA	SCO-6081R* (* is N or P: N = NTSC, P=PAL)	E158873-A76-UL	
DIGITAL COLOR CAMERA	SCV-6081R* and SCD-6081R* (* is N or P: N = NTSC, P=PAL)	E158873-A77-UL	
NETWORK VIDEO RECORDER	SRN-4000	E158873-A78-UL	
DIGITAL COLOR CAMERA	SCD-6021* (* is N or P: N = NTSC, P=PAL)	E158873-A81-UL	
NETWORK CAMERA	SNV-6013* (* is N or P: N = NTSC, P=PAL)	E158873-A83-UL	
NETWORK CAMERA	SNB-6010*, SNB-6010A*, SNB-6011*, SNB-6010B*, SNB-6011B* (* is N or P: N = NTSC, P=PAL)	E158873-A85-UL	
NETWORK CAMERA	SNP-6320H*, SNP-5430H* (* is N or P: N = NTSC, P=PAL)	E158873-A86-UL	
NETWORK CAMERA	SNP-6320*, SNP-5430* (* is N or P: N = NTSC, P=PAL)	E158873-A87-UL	
Network Video Recorder	SRN-472S, XRN-810S* (* is N or P: N = NTSC, P=PAL)	E158873-A88-UL	
Digital Video Recorder	SRD-1676D*, SRD-1656D*, SRD-876D* (* is N or P, N=NTSC/ P=PAL)	E158873-A89-UL	
DIGITAL COLOR	SCB-5000* (* is N or P: N = NTSC, P=PAL)	E158873-A90-UL	

CAMERA			
DIGITAL COLOR CAMERA	SCB-5000*D (* is N or P: N = NTSC, P=PAL)	E158873-A91-UL	
DIGITAL COLOR CAMERA	SCD-5080* (* is N or P: N = NTSC, P=PAL)	E158873-A92-UL	
DIGITAL COLOR CAMERA	SCB-5003*, SCB-5005*, HCB-6001* (* is N or P: N = NTSC, P=PAL)	E158873-A94-UL	
DIGITAL COLOR CAMERA	SCV-5082* (* is N or P: N = NTSC, P=PAL)	E158873-A95-UL	
DIGITAL COLOR CAMERA	SCD-5083*, SCD-5083R*, SCD-5082*, SCD-5083B*, SCD-5081R* (* is N or P: N = NTSC, P=PAL)	E158873-A96-UL	
DIGITAL COLOR CAMERA	SCV-5083* (* is N or P: N = NTSC, P=PAL) SCV-5083R* (* is N or P: N = NTSC, P=PAL) SCV-5081R* (* is N or P: N = NTSC, P=PAL)	E158873-A97-UL	
NETWORK CAMERA	SNF-8010VM*, SNF-8010* (* is N or P: N = NTSC, P=PAL)	E158873-A98-UL	
DIGITAL COLOR CAMERA	SCD-5030*, SCD-5020* (* is N or P: N = NTSC, P=PAL)	E158873-A99-UL	
NETWORK CAMERA	SNO-5084R* (* is N or P: N = NTSC, P=PAL)	E158873-A100-UL	
DIGITAL COLOR CAMERA	SCO-5083R*, SCO-5081R* (* is N or P: N = NTSC, P=PAL)	E158873-A101-UL	
NETWORK CAMERA	SNP-6321*, SNP-L6233* (* is N or P: N = NTSC, P=PAL)	E158873-A102-UL	
NETWORK CAMERA	SNP-6321H*, SNP-L6233H* (* is N or P: N = NTSC, P=PAL)	E158873-A103-UL	
DIGITAL COLOR CAMERA	SCV-5085* (* is N or P: N = NTSC, P=PAL)	E158873-A104-UL	
NETWORK CAMERA	SNB-8000* (* is N or P: N = NTSC, P=PAL)	E158873-A105-UL	
NETWORK CAMERA	SNV-8080* (* is N or P: N = NTSC, P=PAL)	E158873-A106-UL	
NETWORK CAMERA	SNZ-6320	E158873-A107-UL	
NETWORK CAMERA	SNP-6320RH*, SNP-L6233RH* (* is N or P: N=NTSC,P=PAL)	E158873-A108-UL	
NETWORK CAMERA	SNP-5321H*, SNP-L5233H* (* is N or P: N = NTSC, P=PAL)	E158873-A109-UL	
NETWORK CAMERA	SNP-5321*, SNP-L5233* (* N: NTSC / P:PAL)	E158873-A110-UL	
NETWORK CAMERA	SND-L6013R*, SND-L6013*, SND-L6012*, SND-L5013* (* is N or P: N:NTSC/ P:PAL)	E158873-A111-UL	
NETWORK CAMERA	SNO-L6083R*, SNO-L5083R* (* is N or P: N = NTSC, P=PAL)	E158873-A113-UL	
Network Video Recorder	SRN-1673S*(* is N or P)	E158873-A115-UL	
NETWORK CAMERA	SNO-L6013R* (* is N or P: N = NTSC, P=PAL)	E158873-A118-UL	
NETWORK CAMERA	SND-L6083R*, SND-L5083R* (* is N or P: N = NTSC, P=PAL)	E158873-A119-UL	
Network Video Recorder	SRN-873S* (* is N or P: N = NTSC, P=PAL)	E158873-A120-UL	
NETWORK CAMERA	SNV-L6083R*, SNV-L5083R* (* is N or P: N = NTSC, P=PAL)	E158873-A121-UL	

NETWORK CAMERA	SNB-9000* (* is N or P: N = NTSC, P=PAL)	E158873-A122-UL	
Optical PTZ Accessary	SBP-301HF, SBP-302HF	E158873-A125-UL	
Optical PTZ Accessary	SBP-300HF	E158873-A126-UL	
NETWORK CAMERA	SNV-8081R* (* is N or P: N = NTSC, P=PAL)	E158873-A127-UL	
NETWORK CAMERA	SNO-8081R* (* is N or P: N = NTSC, P=PAL)	E158873-A128-UL	
NETWORK CAMERA	SNV-6085R* (* is N or P: N = NTSC, P=PAL) SNV-6085* (* is N or P: N = NTSC, P=PAL)	E158873-A129-UL	
DIGITAL COLOR CAMERA	SCB-6003* (* is N or P: N = NTSC, P=PAL)	E158873-A130-UL	
DIGITAL COLOR CAMERA	SCO-6023R* (* is N or P: N = NTSC, P=PAL)	E158873-A132-UL	
DIGITAL COLOR CAMERA	SCV-6083R* (* is N or P: N = NTSC, P=PAL)	E158873-A133-UL	
DIGITAL COLOR CAMERA	SCV-6023R* (* is N or P: N = NTSC, P=PAL)	E158873-A135-UL	
DIGITAL COLOR CAMERA	SCD-6023R*, SCD-6013* (* is N or P: N = NTSC, P=PAL)	E158873-A136-UL	
DIGITAL COLOR CAMERA	SCD-6083R* (* is N or P: N = NTSC, P=PAL)	E158873-A137-UL	
DIGITAL COLOR CAMERA	SCO-6083R*(* is N or P: N = NTSC, P=PAL)	E158873-A138-UL	
NETWORK CAMERA	SNV-L6014RM*, SNV-L6013R* (* is N or P: N = NTSC, P=PAL)	E158873-A139-UL	
DIGITAL COLOR CAMERA	PNO-9080R* (* is N or P: N = NTSC, P=PAL)	E158873-A140-UL	
NETWORK CAMERA	PNV-9080R* (* is N or P: N = NTSC, P=PAL)	E158873-A141-UL	
NETWORK CAMERA	PND-9080R* (* is N or P: N = NTSC, P=PAL)	E158873-A142-UL	
Digital Video Recorder	SRD-1685*, SRD-894*, HRD-842* (* is N or P, N=NTSC/ P=PAL)	E158873-A143-UL	
Digital Video Recorder	SRD-1694*, HRD-1642* (* is N or P, N=NTSC/ P=PAL)	E158873-A144-UL	
Network Video Recorder (NVR)	XRN-2011*, XRN-2010*, XRN-3010*, XRN-1610* (* is N or P: N=NTSC, P=PAL)	E158873-A146-UL	
NETWORK CAMERA	QNO-7030R*, QNO-7020R*, QNO-7010R*, QNO-6030R*, QNO-6020R*, QNO-6010R*, QNO-6070R*, QNO-7080R*, QNO-6071R* (* is N or P: N = NTSC, P=PAL)	E158873-A147-UL	
NETWORK CAMERA	QND-7030R*, QND-7020R*, QND-7010R*, QND-6030R*, QND-6020R*, QND-6010R*, QND-6070R*, QND-7080R* (* is N or P: N = NTSC, P=PAL)	E158873-A148-UL	
NETWORK CAMERA	QNV-7030R*, QNV-7020R*, QNV-7010R*, QNV-6030R*, QNV-6020R*, QNV-6010R*, QNV-6070R*, QNV-7080R* (* is N or P: N = NTSC, P=PAL)	E158873-A149-UL	
Network Video Recorder	XRN-1610S* (* is N or P: N=NTSC, P=PAL)	E158873-A150-UL	
NETWORK	PNF-9010RV*, PNF-9010R*, PNF-9010RVM* (* is	E158873-A151-UL	

CAMERA	N or P: N = NTSC, P=PAL)		
NETWORK CAMERA	PNM-9020V* (* is N or P: N = NTSC, P=PAL)	E158873-A152-UL	
Network Video Recorder	PRN-4011* (* is N or P: N=NTSC, P=PAL)	E158873-A153-UL	
DIGITAL COLOR CAMERA	HCP-6320*, HCP-6320A*, HCP-6230* (* is N or P: N = NTSC, P=PAL)	E158873-A154-UL	
DIGITAL COLOR CAMERA	HCP-6320H*, HCP-6320HA*, HCP-6230H* (* is N or P: N = NTSC, P=PAL)	E158873-A155-UL	
NETWORK CAMERA	PNP-9200RH*, XNP-6370RH*, XNP-6330RH* (* is N or P: N=NT, P=PAL)	E158873-A156-UL	
NETWORK CAMERA	XNB-8000*, XNB-6000* (* is N or P: N = NTSC, P=PAL)	E158873-A157-UL	
NETWORK CAMERA	XNO-8080R*, XNO-6080R*, XNO-6120R* (* is N or P: N = NTSC, P=PAL)	E158873-A158-UL	
NETWORK CAMERA	XNV-8040R*, XNV-8030R*, XNV-8020R*, XNV-6020*, XNV-6010*, XNV-6020R* (* is N or P: N = NTSC, P=PAL)	E158873-A159-UL	
NETWORK CAMERA	XND-8040R*, XND-8030R*, XND-8020R*, XND-6020*, XND-6010*, XND-6020R* (* is N or P: N = NTSC, P=PAL)	E158873-A160-UL	
NETWORK CAMERA	XNV-8080R* (* is N or P: N = NTSC, P=PAL) XNV-6080R* (* is N or P: N = NTSC, P=PAL) XNV-6080* (* is N or P: N = NTSC, P=PAL) XNV-6120R* (* is N or P: N = NTSC, P=PAL) XNV-6120* (* is N or P: N = NTSC, P=PAL)	E158873-A161-UL	
NETWORK CAMERA	XND-8080RV*, XND-8080R*, XND-6080RV*, XND-6080R*, XND-6080V*, XND-6080* (* is N or P: N = NTSC, P=PAL)	E158873-A162-UL	
AHD Multi Directional Camera	HCM-9020VQ* (is N or P: N = NTSC, P=PAL)	E158873-A163-UL	
NETWORK CAMERA	XNO-8020R*, XNO-8030R*, XNO-8040R*, XNO-6010R*, XNO-6020R* (* is N or P: N = NTSC, P=PAL)	E158873-A164-UL	
NETWORK CAMERA	XNV-6011* (* is N or P: N = NTSC, P=PAL)	E158873-A165-UL	
DIGITAL COLOR CAMERA	HCD-6080R*, HCD-6070R* (* is N or P: N = NTSC, P=PAL)	E158873-A167-UL	
DIGITAL COLOR CAMERA	HCV-6080R*, HCV-6070R* (* is N or P: N = NTSC, P=PAL)	E158873-A168-UL	
NETWORK CAMERA	XNP-6120H* (* is N or P: N = NTSC, P=PAL)	E158873-A169-UL	
NETWORK CAMERA	XND-8020F*, XND-6011F* (* is N or P: N = NTSC, P=PAL)	E158873-A170-UL	
NETWORK CAMERA	PNM-9080VQ* (* is N or P: N = NTSC, P = PAL)	E158873-A172-UL	
Network Storage	SRB-160S	E158873-A173-UL	
NETWORK CAMERA	TNB-6030* (* is N or P: N = NTSC, P = PAL)	E158873-A174-UL	
NETWORK CAMERA	PNM-9081VQ* (* is N or P: N = NTSC, P = PAL)	E158873-A176-UL	
NETWORK CAMERA	XNO-6085R* (* is N or P: N = NTSC, P=PAL)	E158873-A177-UL	
NETWORK CAMERA	XNB-6005* (* is N or P: N = NTSC, P=PAL)	E158873-A178-UL	

NETWORK VIDEO RECORDER	SNR-D5401N	E158873-A179-UL	
NETWORK CAMERA	XND-6085*, XND-6085V* (* is N or P: N = NTSC, P=PAL)	E158873-A180-UL	
NETWORK CAMERA	XNV-6085* (* is N or P: N = NTSC, P=PAL)	E158873-A181-UL	
NETWORK CAMERA	XNP-6040H* (* is N or P: N = NTSC, P=PAL)	E158873-A182-UL	
NETWORK VIDEO DECODER	SPD-150* (* is N or P: N = NTSC, P=PAL)	E158873-A184-UL	
DIGITAL COLOR CAMERA	HCB-6000*, HCB-7000* (* is N or P: N = NTSC, P=PAL)	E158873-A185-UL	
DIGITAL COLOR CAMERA	HCZ-6320* (* is N or P: N = NTSC, P=PAL)	E158873-A186-UL	
NETWORK CAMERA	XNF-8010RVM*, XNF-8010RV*, XNF-8010R* (* is N or P: N = NTSC, P=PAL)	E158873-A187-UL	
DIGITAL COLOR CAMERA	HCO-6070R*, HCO-6080R* (* is N or P: N = NTSC, P=PAL)	E158873-A188-UL	
NETWORK CAMERA	XNB-6001* (* is N or P: N = NTSC, P=PAL)	E158873-A189-UL	
DIGITAL COLOR CAMERA	HCO-7070R* (* is N or P: N = NTSC, P=PAL)	E158873-A190-UL	
LENS MODULE	SLA-T2480*, SLA-T2480V*, SLA-T4680*, SLA-T4680V* (* is N or P: N = NTSC, P=PAL)	E158873-A191-UL	
DIGITAL COLOR CAMERA	HCD-7070R* (* is N or P: N = NTSC, P=PAL)	E158873-A192-UL	
DIGITAL COLOR CAMERA	HCV-7070R* (* is N or P: N = NTSC, P=PAL)	E158873-A193-UL	
NETWORK VIDEO RECORDER	TRM-1610S	E158873-A194-UL	
LENS MODULE	SLA-T1080F* (* is N or P: N = NTSC, P=PAL)	E158873-A195-UL	
ANALOG CAMERA	HCV-7010R*, HCV-7020R*, HCV-7030R* (* is N or P: N = NTSC, P=PAL)	E158873-A197-UL	
DIGITAL COLOR CAMERA	HCD-7010R*, HCD-7020R*, HCD-7030R* (* is N or P: N = NTSC, P=PAL)	E158873-A198-UL	
DIGITAL COLOR CAMERA	HCO-7010R*, HCO-7020R* , HCO-7030R* (* is N or P: N = NTSC, P=PAL)	E158873-A199-UL	
NETWORK CAMERA	XNP-6320, QNP-6230	E158873-A200-UL	

CERTIFICATE OF COMPLIANCE

Certificate Number	20180126-E158873
Report Reference	E155873-A200-UL
Issue Date	2018-JANUARY-26
Issued to:	HANWHA TECHWIN CO LTD 1204 Changwon-daero Seongsan-gu Changwon-si Gyeongsangnam-do 51542 KOREA
This is to certify that representative samples of	INFORMATION TECHNOLOGY EQUIPMENT INCLUDING ELECTRICAL BUSINESS EQUIPMENT NETWORK CAMERA, Models XNP-6320, QNP-6230
	Have been investigated by UL in accordance with the Standard(s) indicated on this Certificate.
Standard(s) for Safety:	UL 60950-1 & CAN/CSA C22.2 No. 60950-1-07, Information Technology Equipment - Safety - Part 1: General Requirements
Additional Information:	See the UL Online Certifications Directory at www.ul.com/database for additional information

Only those products bearing the UL Certification Mark should be considered as being covered by UL's Certification and Follow-Up Service.

Look for the UL Certification Mark on the product.

Bruce Mahrenholz, Director North American Certification Program

UL LLC

Any information and documentation involving UL Mark services are provided on behalf of UL LLC (UL) or any authorized licensee of UL. For questions, please contact a local UL Customer Service Representative at http://ul.com/aboutul/locations/

UL TEST REPORT AND PROCEDURE

Standard:	UL 60950-1, 2nd Edition, 2014-10-14 (Information Technology Equipment - Safety - Part 1: General Requirements) CAN/CSA C22.2 No. 60950-1-07, 2nd Edition, 2014-10 (Information Technology Equipment - Safety - Part 1: General Requirements)
Certification Type:	Listing
CCN:	NWGQ, NWGQ7 (Information Technology Equipment Including Electrical Business Equipment)
Product:	NETWORK CAMERA
Model:	XNP-6320, QNP-6230
Rating:	Rated Input: 24 Vac 50/60 Hz 1.6 A or PoE (42.5 Vdc - 57 Vdc) 0.7 A
Applicant Name and Address:	HANWHA TECHWIN CO LTD 1204 CHANGWON-DAERO SEONGSAN-GU CHANGWON-SI GYEONGSANGNAM-DO 51542 KOREA

This is to certify that representative samples of the products covered by this Test Report have been investigated in accordance with the above referenced Standards. The products have been found to comply with the requirements covering the category and the products are judged to be eligible for Follow-Up Service under the indicated Test Procedure. The manufacturer is authorized to use the UL Mark on such products which comply with this Test Report and any other applicable requirements of UL LLC ('UL') in accordance with the Follow-Up Service Agreement. Only those products which properly bear the UL Mark are considered as being covered by UL's Follow-Up Service under the indicated Test Procedure.

The applicant is authorized to reproduce the referenced Test Report provided it is reproduced in its entirety.

Any information and documentation involving UL Mark services are provided on behalf of UL LLC (UL) or any authorized licensee of UL.

Prepared by: Sungil Kim Reviewed by: Seungtae Kim

Copyright © 2018

Supporting Documentation

The following documents located at the beginning of this Procedure supplement the requirements of this Test Report:

A. Authorization - The Authorization page may include additional Factory Identification Code markings.

B. Generic Inspection Instructions -

i. Part AC details important information which may be applicable to products covered by this Procedure. Products described in this Test Report must comply with any applicable items listed unless otherwise stated in the body of this Test Report.

ii. Part AE details any requirements which may be applicable to all products covered by this Procedure. Products described in this Test Report must comply with any applicable items listed unless otherwise stated in the body of each Test Report.

iii. Part AF details the requirements for the UL Certification Mark which is not controlled by the technical standard used to investigate these products. Products are permitted to bear only the Certification Mark(s) corresponding to the countries for which it is certified, as indicated in each Test Report.

Product Description

NETWORK CAMERA intended for indoor use.

Model Differences

Basic model is XNP-6320.

Model QNP-6230 is identical to basic model XNP-6320 except for software and model designation. (XNP-6320: Zoom ratio:32, QNP-6230: Zoom ratio: 23)

Technical Considerations

- Equipment mobility : stationary
- Connection to the mains : No direct connection
- Operating condition : continuous
- Access location : operator accessible
- Over voltage category (OVC) : OVC I
- Mains supply tolerance (%) or absolute mains supply values : No direct connection
- Tested for IT power systems : No
- IT testing, phase-phase voltage (V) : N/A
- Class of equipment : Class III (supplied by SELV)
- Considered current rating of protective device as part of the building installation (A) : N/A
- Pollution degree (PD) : PD 2
- IP protection class : IP X0
- Altitude of operation (m) : Up to 2 000
- Altitude of test laboratory (m) : Less than 2 000
- Mass of equipment (kg) : 1.69
- The product was submitted and evaluated for use at the maximum ambient temperature (Tma) permitted by the manufacturer’s specification of: 55 °C,
- The following are available from the Applicant upon request: Installation (Safety) Instructions / Manual

Additional Information

Original (4788251011)
- Maximum normal load: Continuous operation.

Additional Standards

The product fulfills the requirements of: N/A

Markings and instructions

Clause Title	Marking or Instruction Details
Power rating - Ratings	Ratings (voltage, frequency/dc, current)
Power rating - Company identification	Listee's or Recognized company's name, Trade Name, Trademark or File Number
Power rating - Model	Model Number
Replaceable batteries	"CAUTION: Risk of Explosion if Battery is replaced by an Incorrect Type. Dispose of Used Batteries According to the Instructions."
Installation Manual - Network Environment	The following statement or similar shall be included in the User Manual: "Unit is intended for installation in a Network Environment 0 as defined in IEC TR 62102. As such, associated Ethernet wiring shall be limited to inside the building."
Installation Manual - UL Listed PoE Source	The following statement or similar shall be included in the User Manual: "The wired LAN hub providing power over the Ethernet (PoE) in accordance with IEEE 802-3af shall be a UL Listed device with the output evaluated as a Limited Power Source as defined in UL60950-1.
Installation Manual - Selection of Power Supply	The Users Manual should provide simple instructions for the correct selection of a suitable Listed Class 2 Power Units, including a statement such as "This product is intended to be supplied by Power Unit marked "Class 2" or "LPS" and rated 24 Vac(50 or 60 Hz), min. 1.6 A or PoE(42.5V - 57 V), min 0.7 A.

Special Instructions to UL Representative

N/A

Production-Line Testing Requirements

Electric Strength Test Special Constructions - Refer to Generic Inspection Instructions, Part AC for further information.

Model	Component	Removable Parts	Test probe location	V rms	V dc	Test Time, s
N/A						

Earthing Continuity Test Exemptions - This test is not required for the following models:

All models

Electric Strength Test Exemptions - This test is not required for the following models:

All models

Electric Strength Test Component Exemptions - The following solid-state components may be disconnected from the remainder of the circuitry during the performance of this test:

Sample and Test Specifics for Follow-Up Tests at UL

Model	Component	Material	Test	Sample(s)	Test Specifics
N/A					

1.5.1	**TABLE: list of critical components**					Pass
Object/part or Description	Manufacturer/ trademark	type/model	technical data	Product Category CCN(s)	Required Marks of Conformity	Supplement ID
Power Supply (Optional)	Interchangeable	Interchangeable	Rated output: 24Vac, 50/60 Hz, min. 1.6A, marked "LPS" or "Class 2".	QQGQ or EPBU	UL	7-09
Enclosure (Plastic Cover - Bottom Ivory)	SAMYANG CORPORATION	3500G-30	Min. 1.5 mm thickness, V-0, 125 deg.C, See enclosure for dimension.	QMFZ2/8	UL (E121254)	7-09
Enclosure (Plastic Cover - Middle Ivory)	LOTTE ADVANCED MATERIALS CO LTD	HN-1064(+)	Min. 1.2 mm thickness, V-1, 80 deg.C, See enclosure for dimension.	QMFZ2/8	UL (E115797)	7-09
Enclosure (Plastic Dome cover)	SABIC INNOVATIVE PLASTICS B V	ML7687	Min. 1.5 mm thickness, V-2, 80 deg.C, See enclosure for dimension.	QMFZ2	UL (E45329)	7-09
Internal plastic material (Cover - Black)	LOTTE ADVANCED MATERIALS CO LTD	NH-1023(+)	Min. 1.5 mm thickness, V-0, 80 deg.C	QMFZ2/8	UL (E115797)	
Fuse (F1)	SMART ELECTRONICS INC	SPT250TE	250 V, 3.15 A	JDYX2/8	UL (E238986)	
(Alternate)	COOPER BUSSMANN LLC	SS-5	250 V, 3.15 A	JDYX2/8	UL (E19180)	
(Alternate)	LITTELFUSE WICKMANN WERKE	392 +, &	250 V, 3.15 A	JDYX2/8	UL (E67006)	
Coin battery (BAT1)	FDK CORPORATION	ML614R	Lithium (Coin), Rechargeable, 3 Vdc, Maximum charging Current 300 mA	BBCV2	UL (MH13421)	
Transformer (T1)	YAO SHENG ELECTRONIC CO LTD	1400423	130 deg.C, See enclosure for more detail.	-	-	7-01
(Alternate)	CLOVER HI-TECH CO LTD	1400423	130 deg.C, See enclosure for more detail.	-	-	7-02
Line Filter (LF1, LF2)	TNC CO LTD	CV430060SHA	6.0 mH, 130 deg.C, See enclosure for more detail.	-	-	7-03
Line Filter (LF3)	DONG GUAN TOP NATION ELECTRONIC	1420603	14.0 mH, 130 deg.C, See enclosure for more detail.	-	-	7-04

	LIMITED					
(Alternate)	CLOVER HI-TECH CO LTD	1420603	14.0 mH, 130 deg.C, See enclosure for more detail.	-	-	7-05
Stepping Motor	DONGGUAN SHINANO MOTOR CO LTD	STH-36C1056	For Tilt, Rated 4.6 Vdc, 0.4 A	-	-	7-06
Stepping Motor	DONGGUAN SHINANO MOTOR CO LTD	STH-36C1078	For pan. Rated 12.0 Vdc, 0.6 A	-	-	7-07
Connectors and Receptacles (Secondary circuits)	Interchangeable	Interchangeable	-	ECBT2 or RTRT2	UL	
Connectors and Receptacles (Secondary circuits) (alternate)	Interchangeable	Interchangeable	Copper alloy pins housed in bodies of plastic rated Min. V-2	QMFZ2	UL	
Internal Wiring (Secondary)	Interchangeable	Interchangeable	FEP, PTFE, PVC, TFE, neoprene, polyimide or marked VW-1; Min. 30 V, 80 deg.C	AVLV2	UL	
Cable	Interchangeable	Interchangeable	FEP, PTFE, PVC, TFE, neoprene, polyimide or marked VW-1; Min. 30 V, 80 deg. C	AVLV2	UL	
FPWB	ACCU TECH	20861	Min. VW-1, 60 V, 105 deg.C.	AVLV2	UL (E479379)	
PWB	Interchangeable	Interchangeable	Min. V-1, 105 deg.C.	ZPMV2	UL	
Label	Interchangeable	Interchangeable	Min.70 deg. C if max. surface temperature not specified.	PGDQ2 or PGJI2	UL	

Enclosures

Type	Supplement Id	Description
Photographs	3-01	Overall View -1
Photographs	3-02	Overall View -2
Photographs	3-03	Overall View -3
Photographs	3-04	Internal View -1
Photographs	3-05	Internal View -2
Photographs	3-06	Internal View -3
Photographs	3-07	Internal View -4
Photographs	3-08	Power board Top
Photographs	3-09	Power board Bottom
Photographs	3-10	Interface board Top
Photographs	3-11	Interface board Bottom
Photographs	3-12	Main board Top
Photographs	3-13	Main board Bottom
Manuals	6-01	Manual
Miscellaneous	7-01	Transformer (T1) Spec by YAO SHENG ELECTRONIC CO LTD
Miscellaneous	7-02	Transformer (T1) spec by CLOVER HI-TECH CO LTD
Miscellaneous	7-03	Line Filter (LF1, LF2) spec by TNC CO LTD
Miscellaneous	7-04	Line Filter (LF3) spec by DONG GUAN TOP NATION ELECTRONIC LIMITED
Miscellaneous	7-05	Line Filter (LF3) spec by CLOVER HI-TECH CO LTD
Miscellaneous	7-06	Stepping motor spec (model STH-36C1056)
Miscellaneous	7-07	Stepping motor spec (model STH-36C1078)
Miscellaneous	7-08	Battery circuit diagram
Miscellaneous	7-09	Enclosure dimension
Miscellaneous	7-10	Label

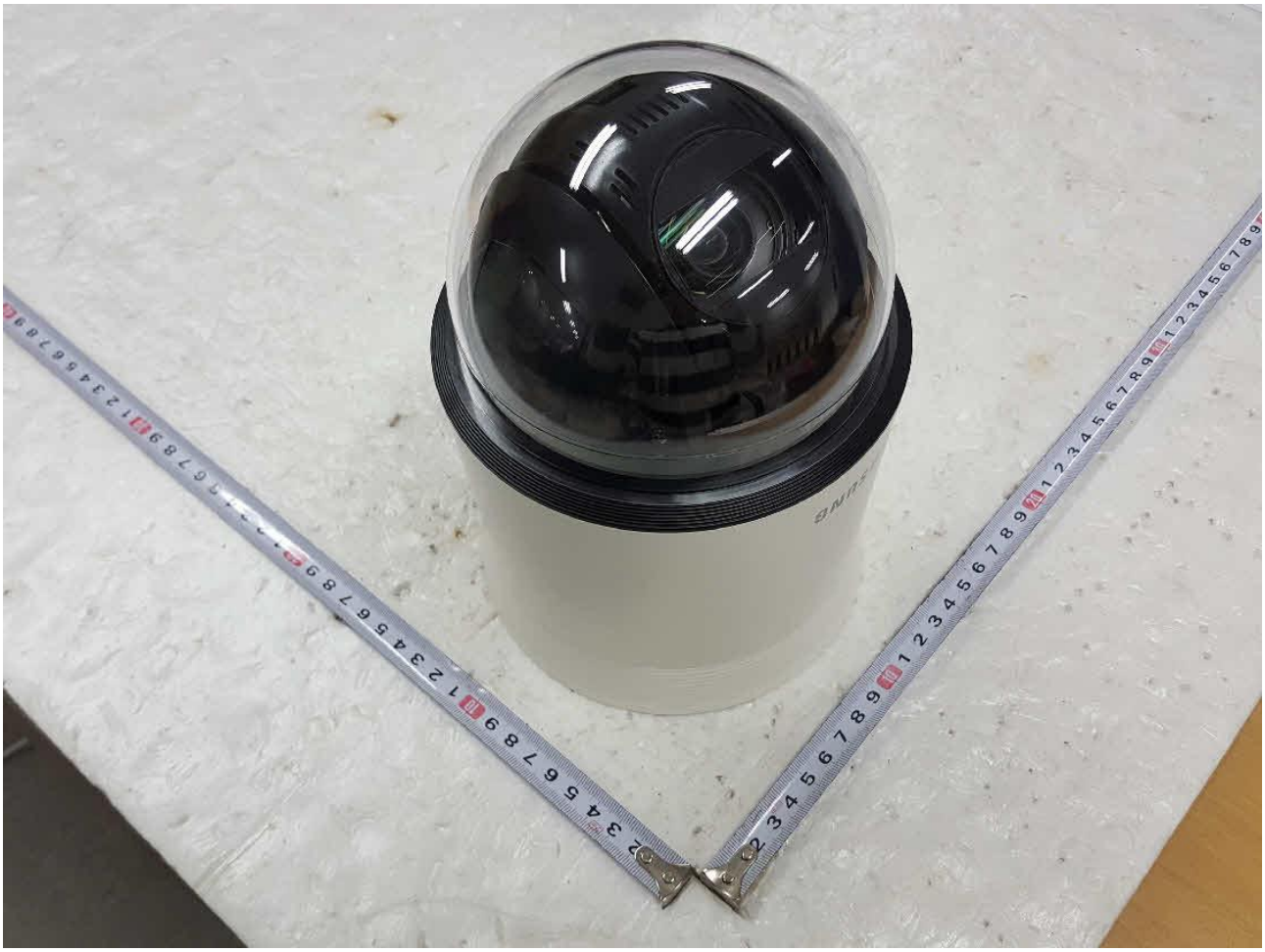

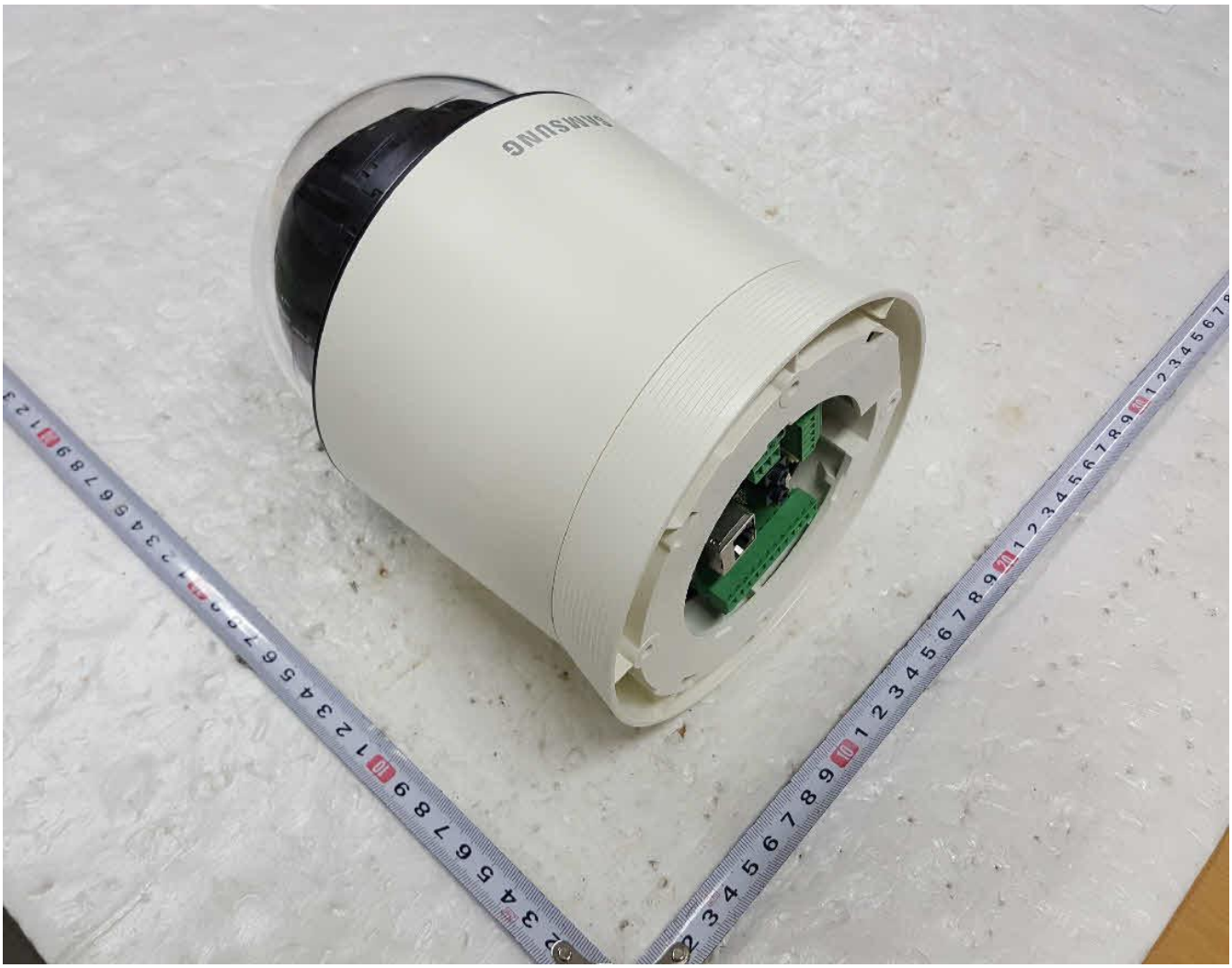
SAMSUNG

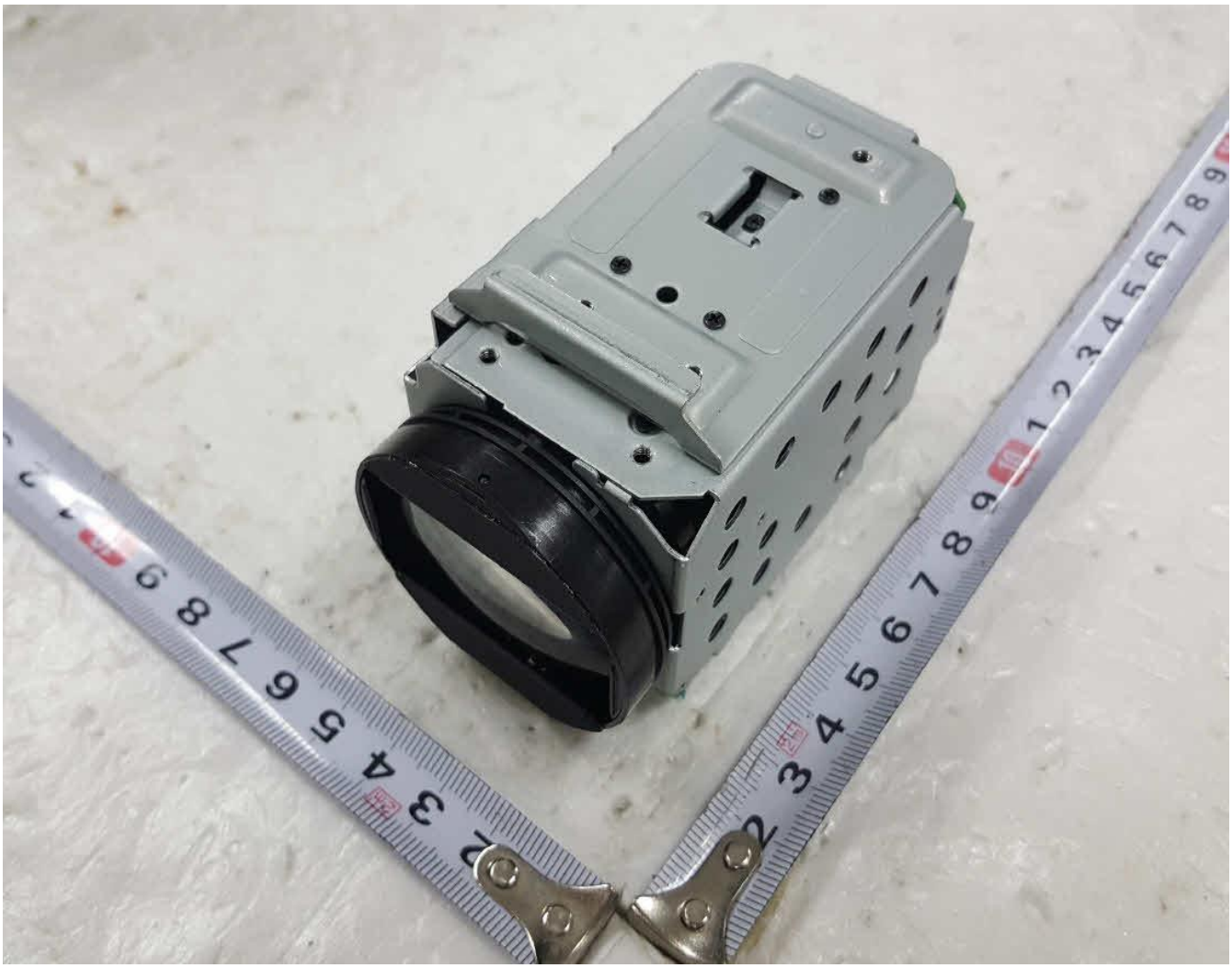

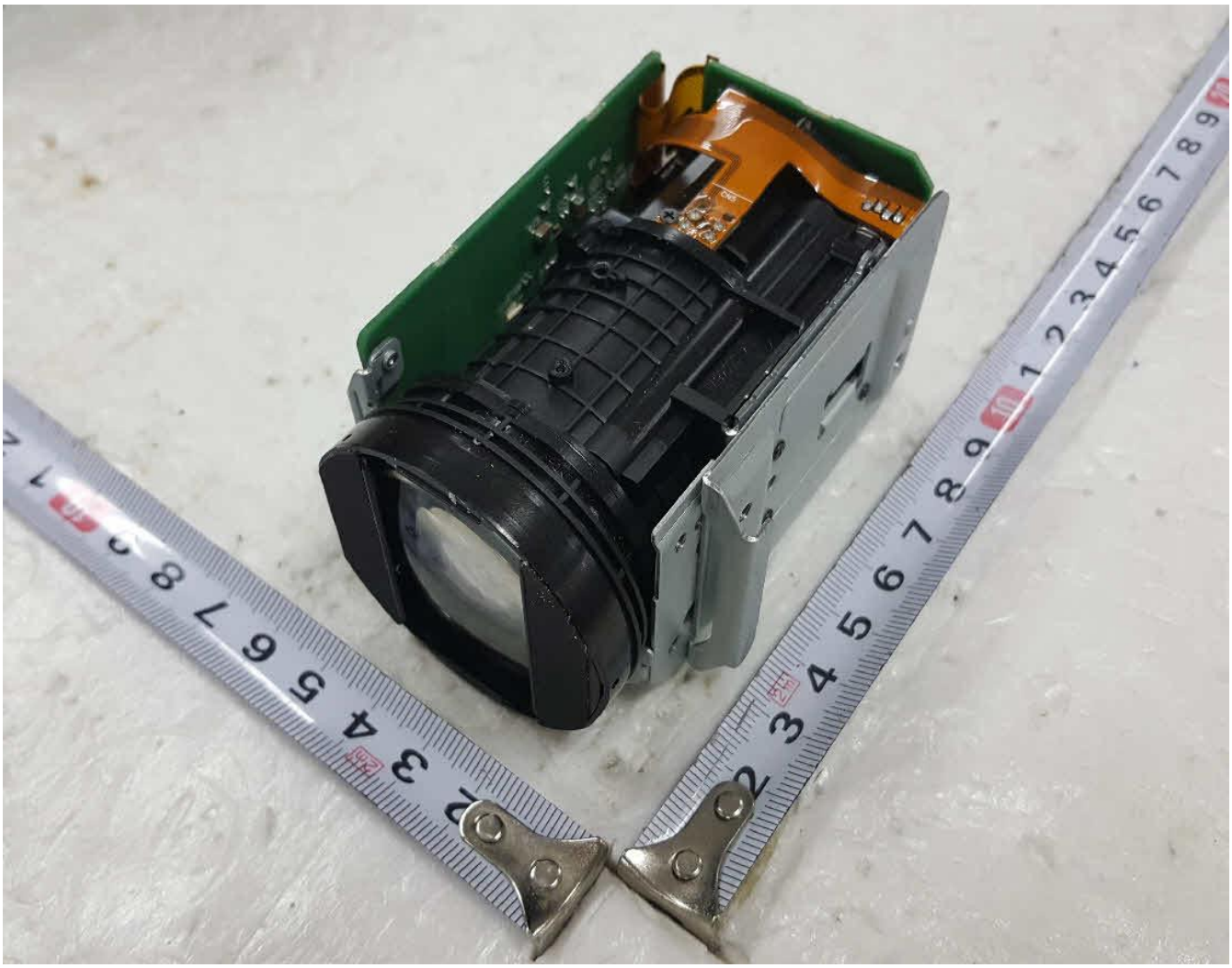

NETWORK CAMERA XNP-6320
MAC ADDRESS 00-16-6D-FE-49-E2
HANWHA TECHWIN CO.,LTD MADE IN CHINA
CAUTION

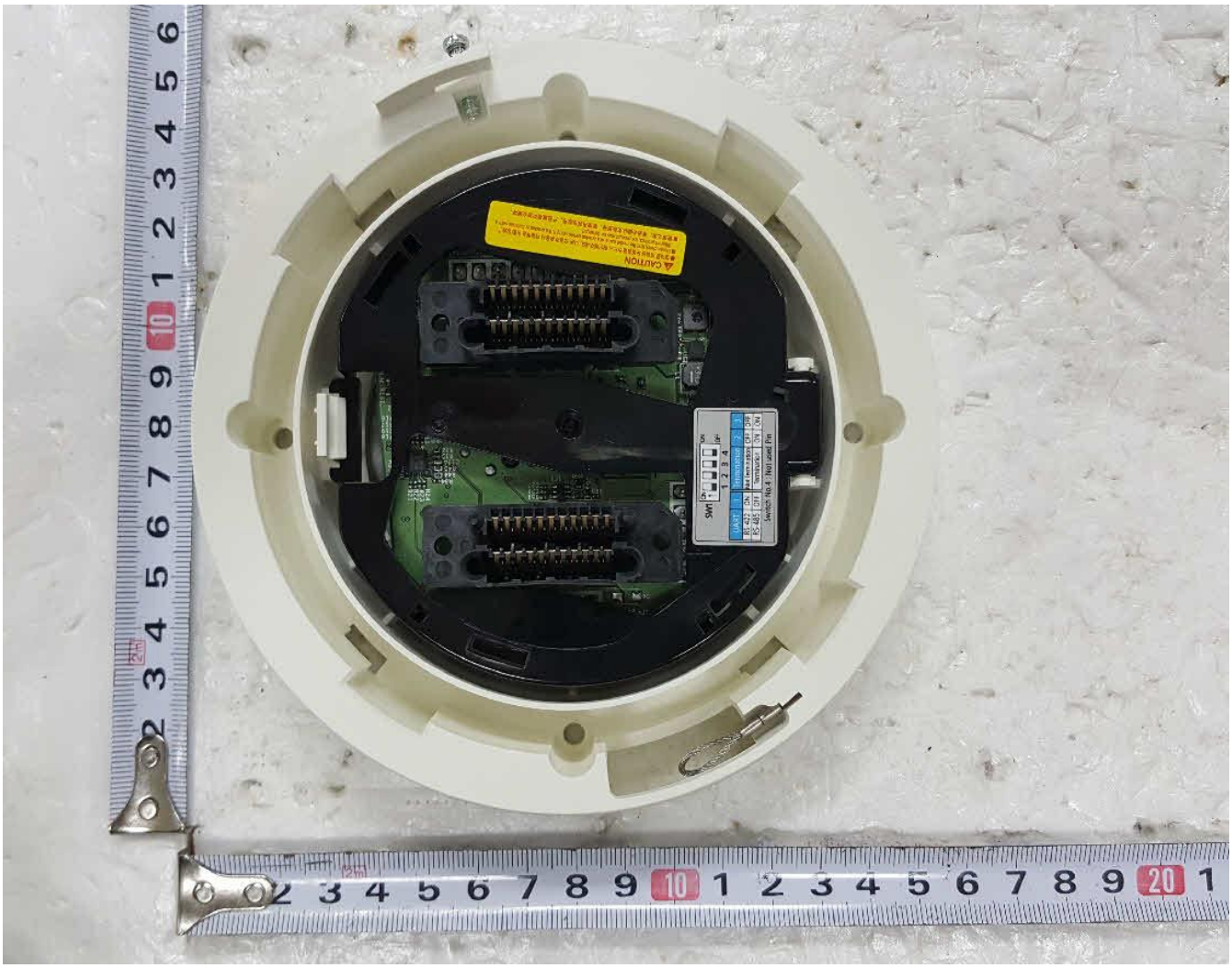
CAUTION
SW1
ON
1 2 3 4
UART
Termination
OFF
OFF
RS-422
ON
Not necessary
OFF
OFF
RS-485
OFF
Necessary
ON
ON
Switch No.4 : Not used Pin

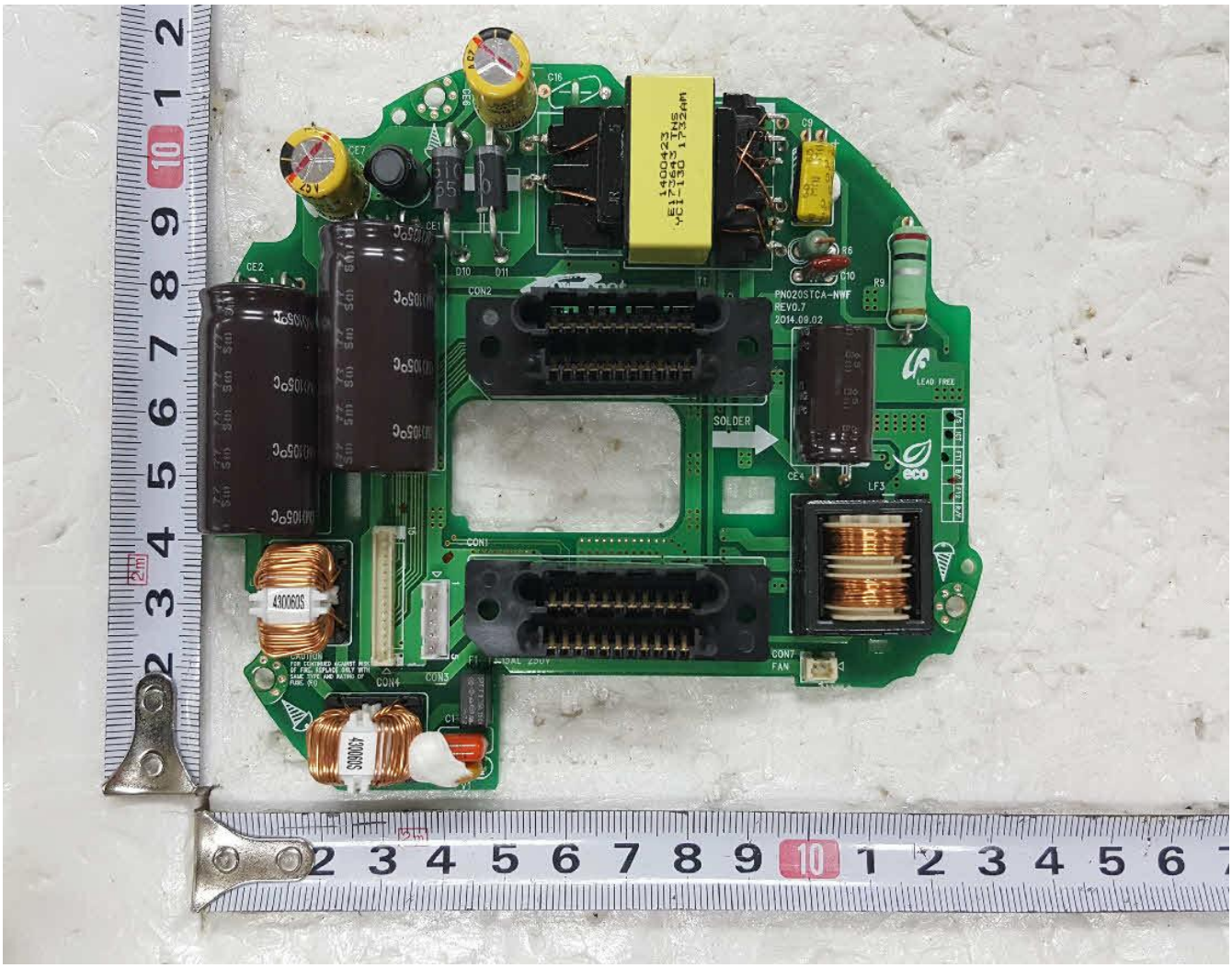
CE7
CE1
CE2
C16
C9
R6
R9
D10
D11
CON2
CON1
CON4
CON3
CON7
FAN
SOLDER
CE4
LF3
LEAD FREE
eco
PN020STCA-NWF
REV0.7
2014.09.02
E175437
YC1-130
1732AM
1400423
430060S
430060S

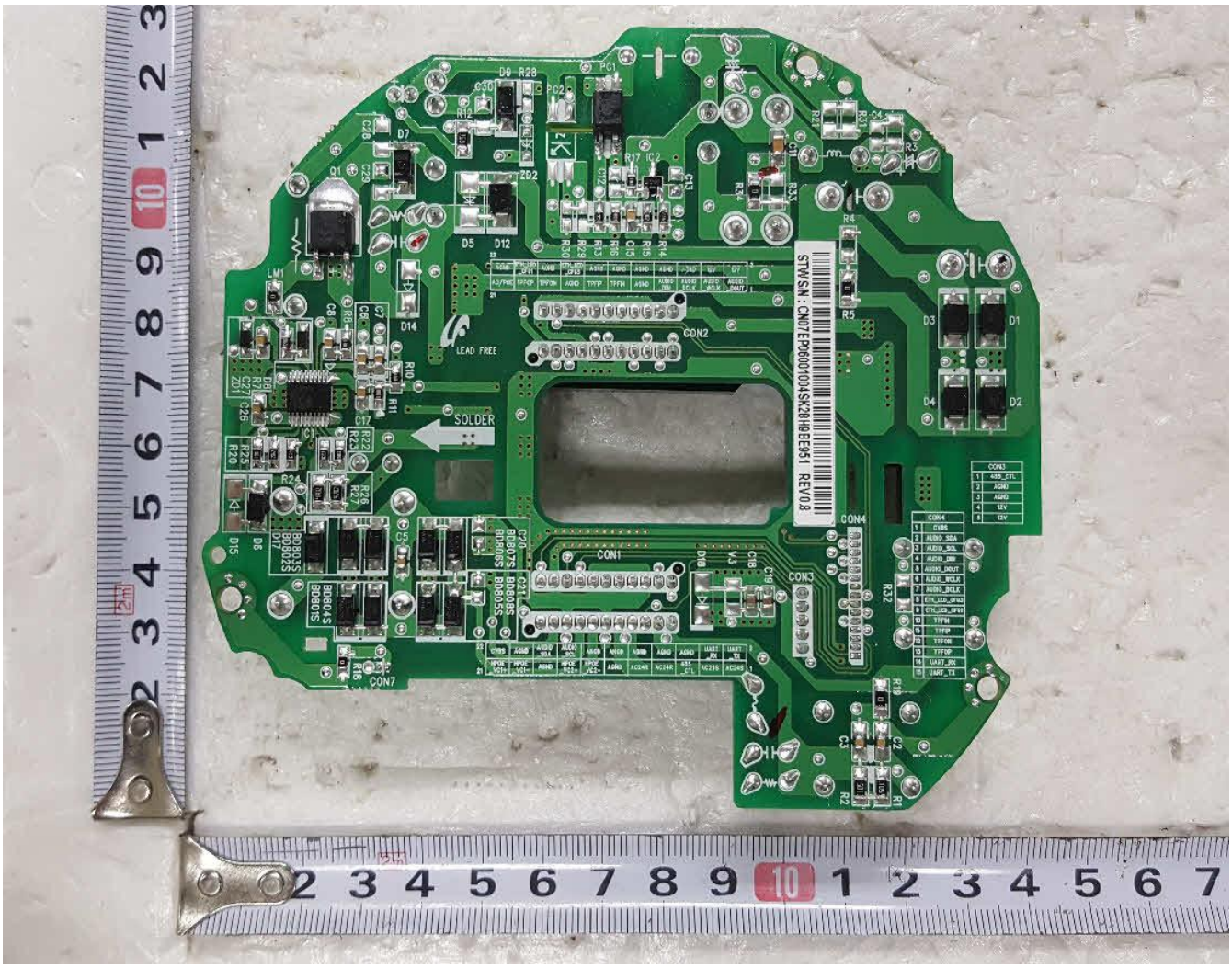
LEAD FREE
SOLDER
CON1
CON2
CON3
CON4
CON7
STM SN:CN0TEP0001004SK2BH0BE451 REV0.8

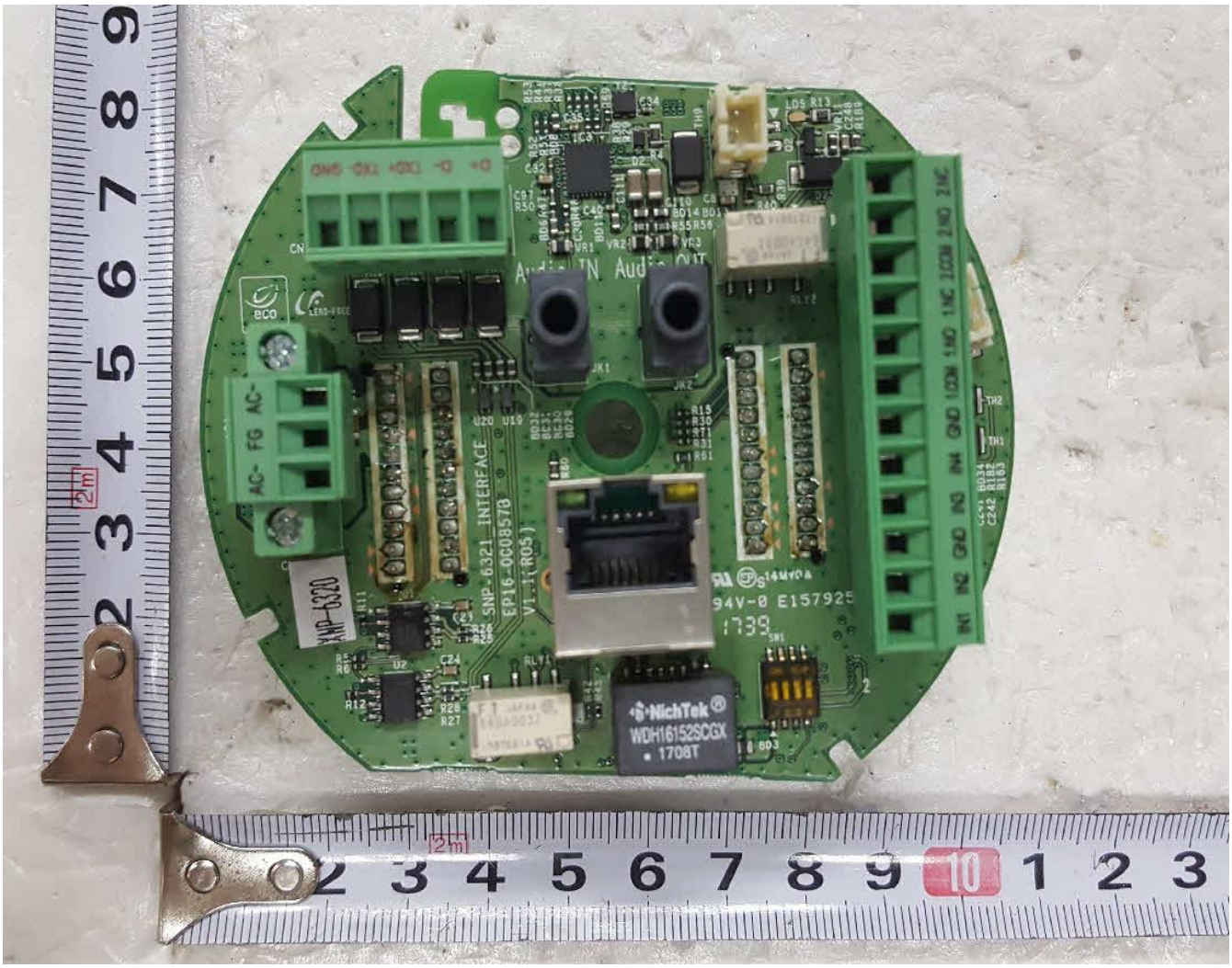
SNP-6321_INTERFACE
EP16-0C08578
V1.1(R05)
94V-0 E157925
NichTek
WDH16152SCGX
1708T

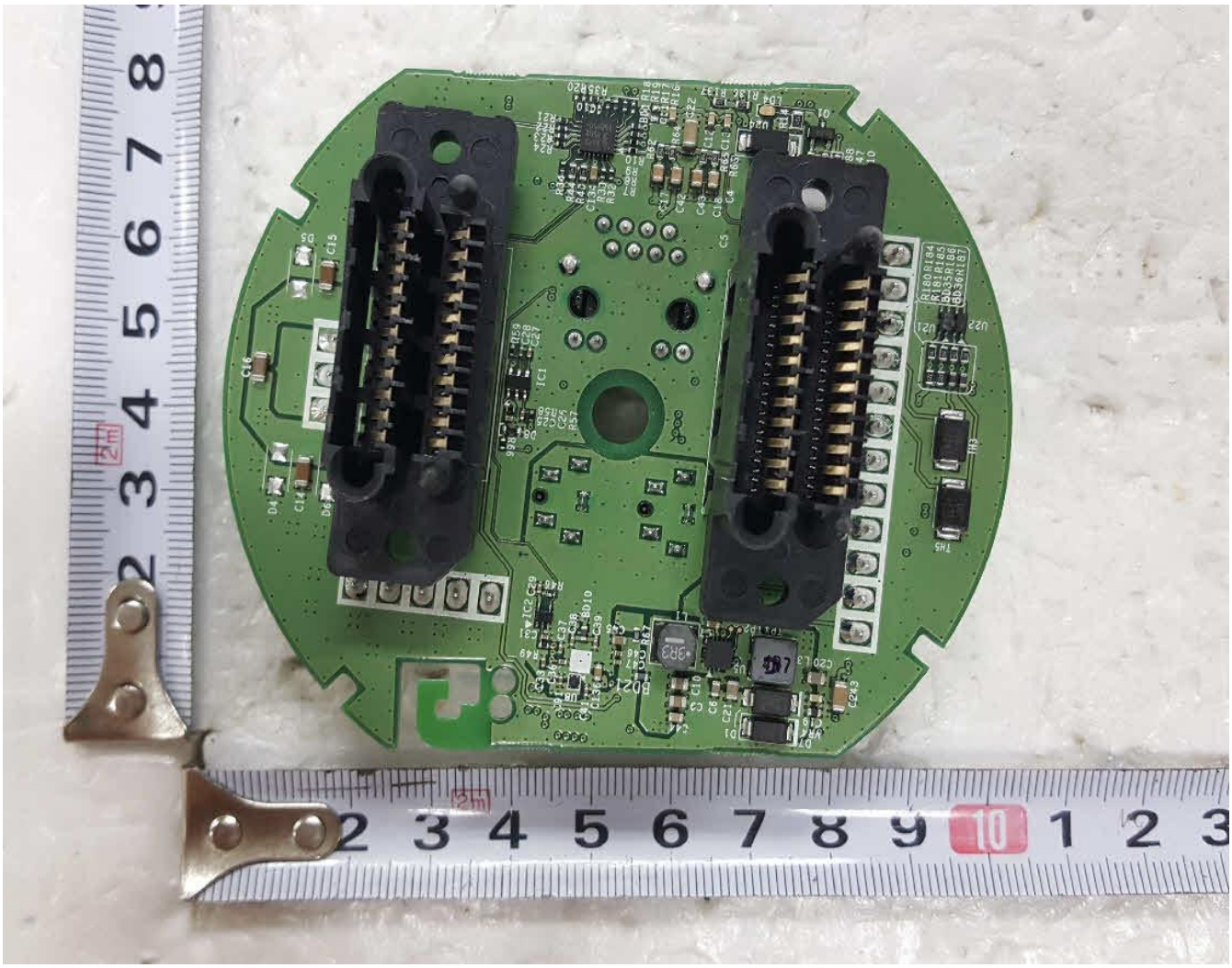

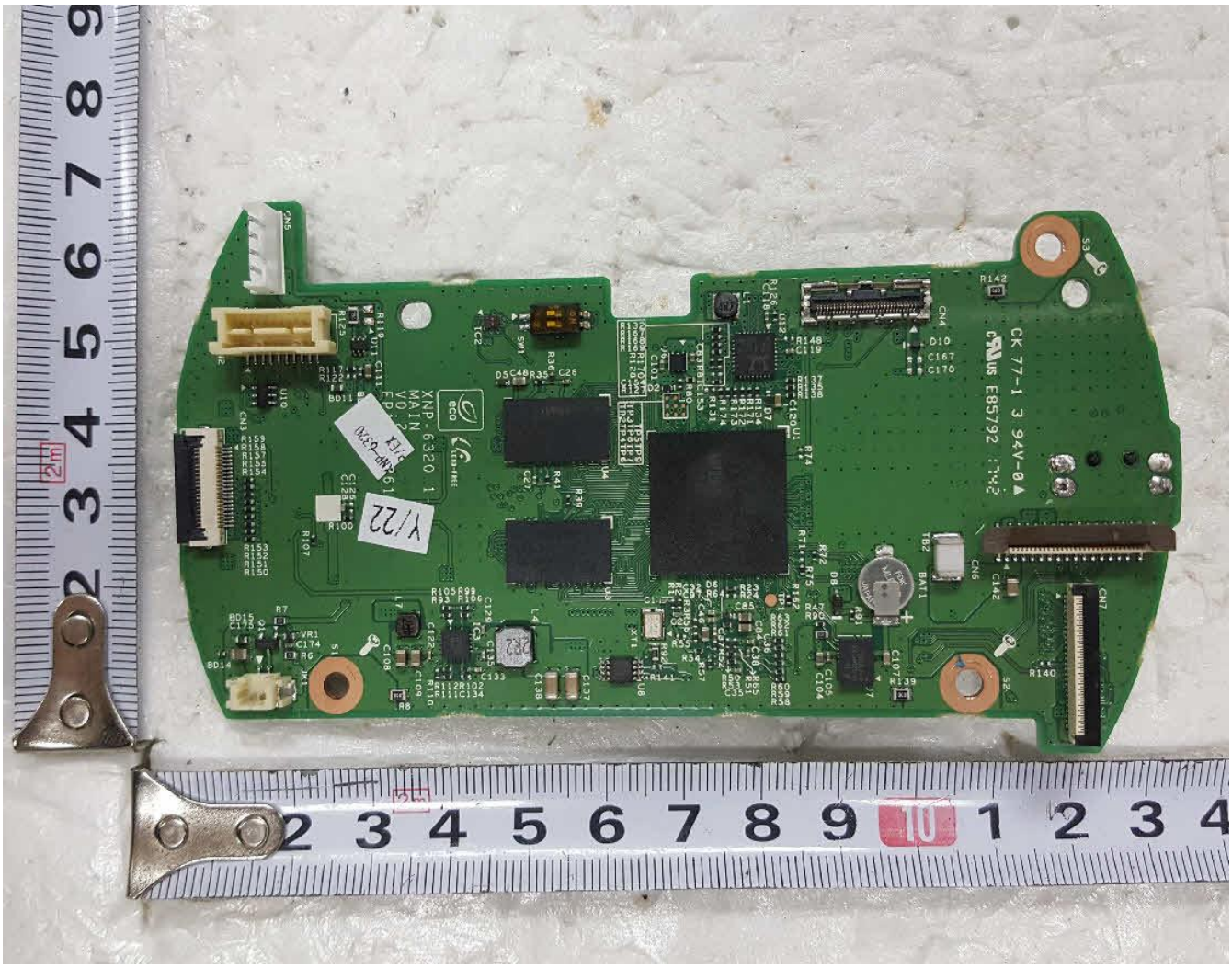
XNP-6320 1-
MAIN
V0.2
Y122
CK 77-1 3 94V-0
E85792

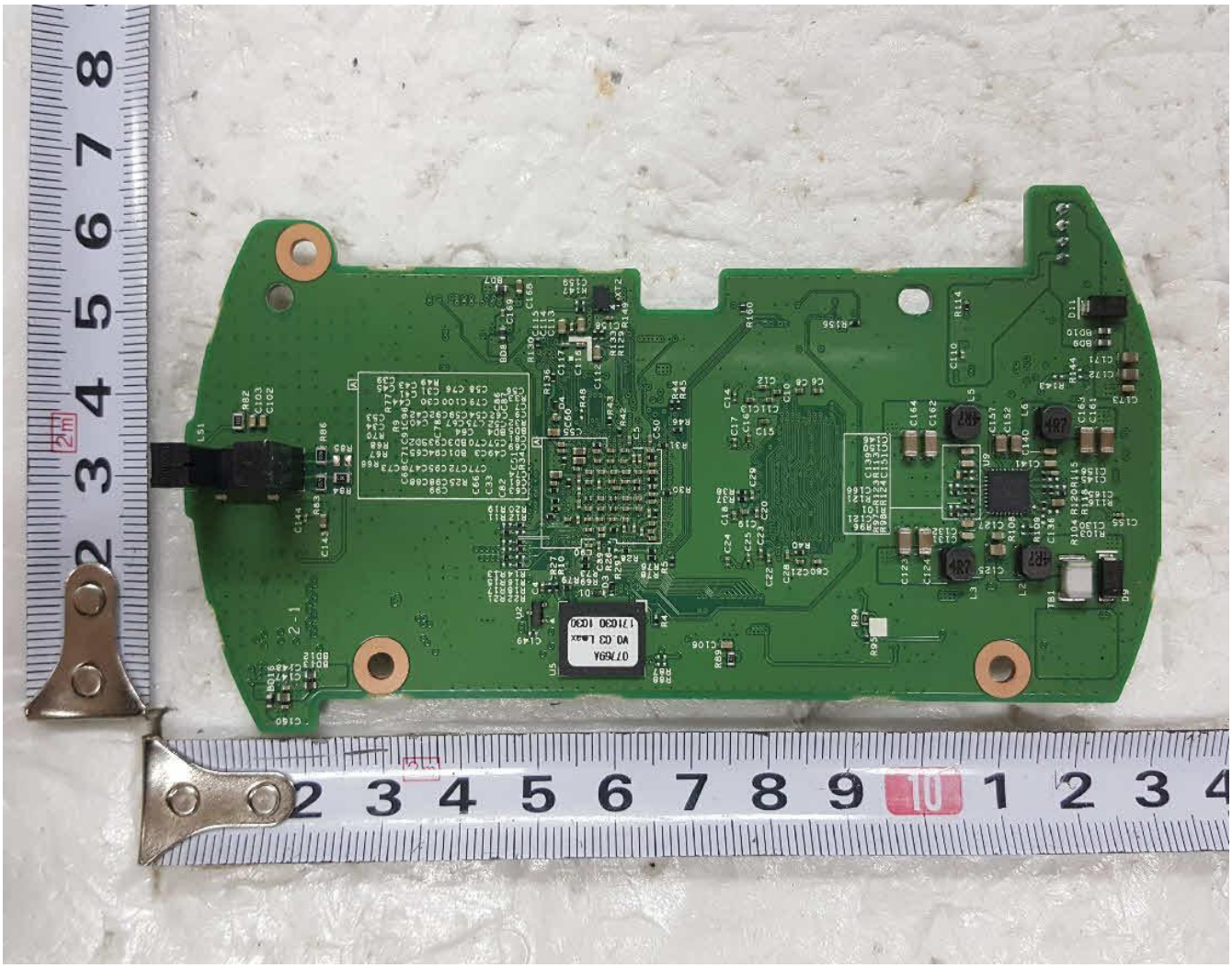

IMPORTANT SAFETY INSTRUCTIONS

1. Read these instructions.
2. Keep these instructions.
3. Heed all warnings.
4. Follow all instructions.
5. Do not use this apparatus near water.
6. Clean the contaminated area on the product surface with a soft, dry cloth or a damp cloth.
   (Do not use a detergent or cosmetic products that contain alcohol, solvents or surfactants or oil constituents as they may deform or cause damage to the product.)
7. Do not block any ventilation openings, Install in accordance with the manufacturer's instructions.
8. Do not install near any heat sources such as radiators, heat registers, stoves, or other apparatus (including amplifiers) that produce heat.
9. Do not defeat the safety purpose of the polarized or grounding-type plug. A polarized plug has two blades with one wider than the other. A grounding type plug has two blades and a third grounding prong. The wide blade or the third prong are provided for your safety. If the provided plug does not fit into your outlet, consult an electrician for replacement of the obsolete outlet.
10. Protect the power cord from being walked on or pinched particularly at plugs, convenience receptacles, and the point where they exit from the apparatus.
11. Only use attachments/ accessories specified by the manufacturer.
12. Use only with the cart, stand, tripod, bracket, or table specified by the manufacturer, or sold with the apparatus. When a cart is used, use caution when moving the cart/ apparatus combination to avoid injury from tip-over.

13. Unplug this apparatus during lighting storms or when unused for long periods of time.
14. Refer all servicing to qualified service personnel. Servicing is required when the apparatus has been damaged in any way, such as power-supply cord or plug is damaged, liquid has been spilled or objects have fallen into the apparatus, the apparatus has been exposed to rain or moisture, does not operate normally, or has been dropped.
15. This product is intended to be supplied by Power Unit marked "Class 2" or "LPS" and rated 24 Vac(50 or 60 Hz), min. 1.6 A or PoE(42.5V ~ 57V), min 0.7 A. (XNP-6320)
16. This product is intended to be supplied by Power Unit marked "Class 2" or "LPS" and rated 24 Vac(50 or 60 Hz), min. 2.9 A or PoE(42.5V ~ 57V), min 0.9 A. (XNP-6320H/6320HS)
17. Do not install the camera vertically on a wall. This will cause Tilt step-out.
18. If you use excessive force when installing the product, the camera may be damaged and malfunction.
    If you forcibly install the product using non-compliant tools, the product may be damaged.
19. Do not install the product in a place where chemical substances or oil mist exists or may be generated. As edible oils such as soybean oil may damage or warp the product, do not install the product in the kitchen or near the kitchen table.
    This may cause damage to the product.
20. When installing the product, be careful not to allow the surface of the product to be stained with chemical substance.
    Some chemical solvents such as cleaner or adhesives may cause serious damage to the product's surface.
21. If you install/disassemble the product in a manner that has not been recommended, the production functions/ performance may not be guaranteed.
    Install the product by referring to "Installation & connection" in the user manual.
22. Installing or using the product in water can cause serious damage to the product.

WARNING

TO REDUCE THE RISK OF FIRE OR ELECTRIC SHOCK, DO NOT EXPOSE THIS PRODUCT TO RAIN OR MOISTURE. DO NOT INSERT ANY METALLIC OBJECT THROUGH THE VENTILATION GRILLS OR OTHER OPENNINGS ON THE EQUIPMENT.

Apparatus shall not be exposed to dripping or splashing and that no objects filled with liquids, such as vases, shall be placed on the apparatus.

To prevent injury, this apparatus must be securely attached to the Wall/ceiling in accordance with the installation instructions.

CAUTION

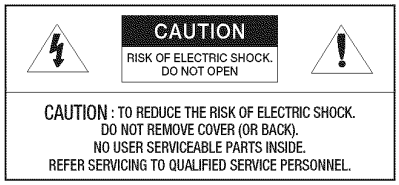

EXPLANATION OF GRAPHICAL SYMBOLS

The lightning flash with arrowhead symbol, within an equilateral triangle, is intended to alert the user to the presence of "dangerous voltage" within the product's enclosure that may be of sufficient magnitude to constitute a risk of electric shock to persons.

The exclamation point within an equilateral triangle is intended to alert the user to the presence of important operating and maintenance (servicing) instructions in the literature accompanying the product.

overview

Class I construction

An apparatus with CLASS I construction shall be connected to a MAINS socket outlet with a protective earthing connection.

Battery

Batteries(battery pack or batteries installed) shall not be exposed to excessive heat such as sunshine, fire or the like.

Disconnection Device

Disconnect the main plug from the apparatus, if it's defected. And please call a repair man in your location.

When used outside of the U.S., it may be used HAR code with fittings of an approved agency is employed.

CAUTION

Risk of explosion if battery is replaced by an incorrect type.
Dispose of used batteries according to the instructions.

These servicing instructions are for use by qualified service personnel only.
To reduce the risk of electric shock do not perform any servicing other than that contained in the operating instructions unless you are qualified to do so.

The CVBS out terminal of the product is provided for easier installation, and is not recommended for monitoring purposes.

Please use the input power with just one camera and other devices must not be connected.

The ITE is to be connected only to PoE networks without routing to the outside plant.

The wired LAN hub providing power over the Ethernet (PoE) in accordance with IEEE 802-3af shall be a UL Listed device with the output evaluated as a Limited Power Source as defined in UL60950-1.

Unit is intended for installation in a Network Environment 0 as defined in IEC TR 62102. As such, associated Ethernet wiring shall be limited to inside the building.

Please read the following recommended safety precautions carefully.

- Do not place this apparatus on an uneven surface.
- Do not install on a surface where it is exposed to direct sunlight, near heating equipment or heavy cold area.
- Do not place this apparatus near conductive material.
- Do not attempt to service this apparatus yourself.
- Do not place a glass of water on the product.
- Do not install near any magnetic sources.
- Do not block any ventilation openings.
- Do not place heavy items on the product.
- Please wear protective gloves when installing/removing the camera.
  The high temperature of the product surface may cause a burn.

User's Manual is a guidance book for how to use the products.

The meaning of the symbols are shown below.

- Reference : In case of providing information for helping of product's usages
- Notice : If there's any possibility to occur any damages for the goods and human caused by not following the instruction

※ Please read this manual for the safety before using of goods and keep it in the safe place.

SPECIFICATIONS

DESCRIPTION	POWER TRANS
SPECIFICATION	50uH / EE2515W(YP2,PL-7,TP4,DMR40,KP4)
MAKER SPECIFICATION	EE2515W/ YS19360122
CODE NO	1400423
MODEL NO	PN020STCA
SPECIAL ARTICLES	UL INSULATION SYSTEM (CLASS "B" / YCI-130)

DESIGN	CHECK	APPROVAL
H.S HONG	S.J KIM	M.D KIM
2012. 12. 04.	2012. 12. 04.	2012. 12. 04.
A TERM OF VALIDITY	YEAR	

REQUEST CUSTOMER	YAO SHENG ELECTRONIC CO.,LTD	TEL	(02)22693789
		FAX	(02)22696759
ADDRESS	10F., NO.95, ZHONGCHENG RD., TUCHENG CITY, TAIPEI COUNTY 236, TAIWAN R.O.C		
REQUEST CUSTOMER	DONG GUAN TOP NATION ELECTRONIC LIMITED	TEL	86-769-86632772
		FAX	86-769-86315197
ADDRESS	NO.3 INDUSTRICAL AREA,JUZHOU SHIJIE TOWN DONGGUAN GUANGDONG CHINA		
REQUEST CUSTOMER	TOP NATION(SU ZHOU) ELECTRONIC LIMITED	TEL	86-512-63271988
		FAX	86-512-63271990
ADDRESS	WUJIANG FENHU ECONOMIC DEVELOPMENT ZONE JIANGSU PROVINCE CHINA		

CUSTOMER : POWERNET TECHNOLOGIES.

SPECIFICATIONS		SHEET NO.	4 OF 46
		DATE	2012. 09. 14.
PART NAME	POWER TRANS	MODEL NAME	PN020STCA
PART NO.	1400423	TYPE	EE2515W

6. APPEARANCE & DIMENSION

<< TOP VIEW >>

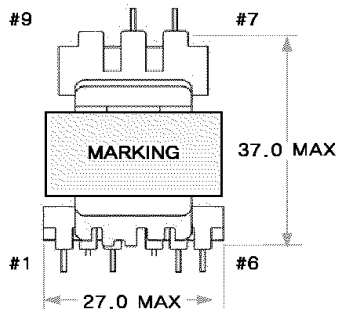

※ MARKING(BLACK) :	1400423 E173643 TNS YCI-130 1208EK							
1400423	PART No.							
E173643	MAKER (TRADE NAME) {YAO SHENG ELECTRONIC CO.,LTD.(UL No)}							
TN	DONG GUAN TOP NATION	CHINA FACTORY ID						
TNS	TOP NATION(SU ZHOU)							
YCI-130	YAO SHENG ELECTRONIC 'CLASS B' SYSTEM							
12	Lot No	Year	2012 : 12 2013 : 13...					
08		Week	First Week : 01 Second Week : 02...					
E	DAY	MON	TUE	WED	THU	FRI	SAT	SUN
		A	B	C	D	E	F	G
Y	MANUFACTURER OF CORE							
	Y	YOUNGHWA		S	SAMWHA			
	T	TDG		M	DMEGC			
	Z	KAIYUAN						

<< FRONT VIEW >>

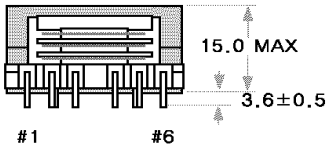

<< SIDE VIEW >>

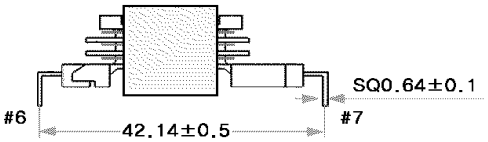

<< BOTTOM VIEW >>

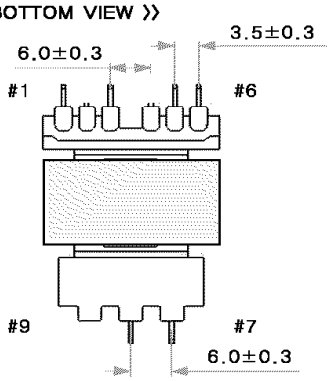

DONG GUAN TOP NATION ELECTRONIC LIMITED
NO.3 INDUSTRICAL AREA.JUZHOU SHIJIE TOWN DONGGUAN CHINA
TEL:86-769-86632772 FAX:86-769-86315197

DESIGN	CHECK	APPROVAL
H.S HONG	S.J KIM	M.D KIM
FILE NO.	YS19360122	

CUSTOMER : POWERNET TECHNOLOGIES.

SPECIFICATIONS

		SHEET NO.	5 OF 46
		DATE	2012. 09. 14.
PART NAME	POWER TRANS	MODEL NAME	PN020STCA
PART NO.	1400423	TYPE	EE2515W

7. SCHEMATIC DIAGRAM

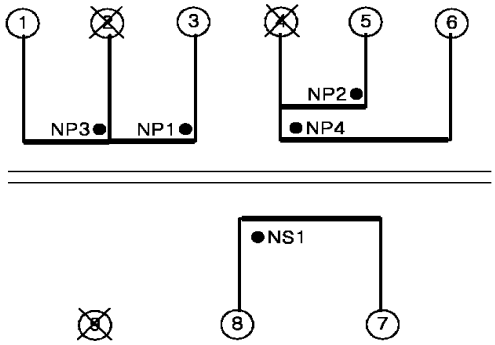

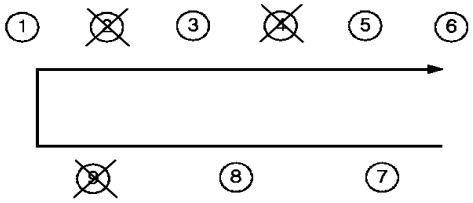

WINDING	BOTTOM VIEW	C.W
BOBBIN INSERT	BOTTOM	
REMOVE PIN	#9	
N.C PIN	-	
CUT PIN	#2, #4	
TUBE PIN	-	

8. WINDING SPECIFICATION

WINDING ORDER	SYMBOL	TERMINAL NO		WIRE	TURNS	WINDING METHOD	REMARKS
W1	NP1	3	2	2UEW 0.50φ	4	A SECTION SOLENOID	
W2	NP2	5	4	2UEW 0.30φ	2	A SECTION SOLENOID	
W3	NS1	8	7	2UEW 0.50φ	4	B SECTION SOLENOID	
W4	NP3	2	1	2UEW 0.50φ	4	C SECTION SOLENOID	
W5	NP4	4	6	2UEW 0.30φ	2	C SECTION SOLENOID	

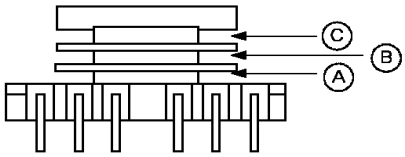

◇ REGARDING ABOVE TABLE STANDARD, THICKNESS OF WIRE MUST BE OVER SPECIFICATION RANGE.

DONG GUAN TOP NATION ELECTRONIC LIMITED
NO.3 INDUSTRICAL AREA.JUZHOU SHIJIE TOWN DONGGUAN CHINA
TEL:86-769-86632772 FAX:86-769-86315197

DESIGN	CHECK	APPROVAL
H.S HONG	S.J KIM	M.D KIM
FILE NO.	YS19360122	

CUSTOMER : POWERNET TECHNOLOGIES.

SPECIFICATIONS		SHEET NO.	8 OF 46
		DATE	2012. 09. 14.
PART NAME	POWER TRANS	MODEL NAME	PN020STCA
PART NO.	1400423	TYPE	EE2515W

11. INTERNAL CONSTRUCTION

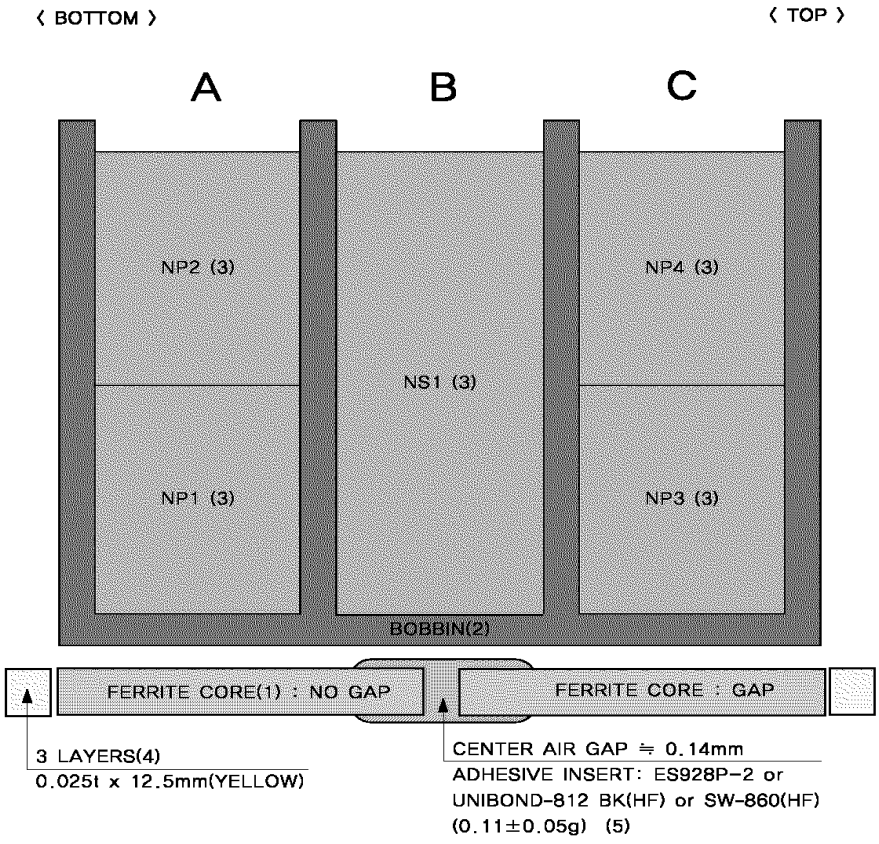

· Winding :
· Ps tape :

DONG GUAN TOP NATION ELECTRONIC LIMITED
NO.3 INDUSTRICAL AREA.JUZHOU SHIJIE TOWN DONGGUAN CHINA
TEL:86-769-86632772 FAX:86-769-86315197

DESIGN	CHECK	APPROVAL
H.S HONG	S.J KIM	M.D KIM
FILE NO.	YS19360122	

CUSTOMER : POWERNET TECHNOLOGIES.

SPECIFICATIONS		SHEET NO.	9 OF 46
		DATE	2012. 09. 14.
PART NAME	POWER TRANS	MODEL NAME	PN020STCA
PART NO.	1400423	TYPE	EE2515W

12. ELECTRICAL CHARACTERISTIC

No	CLOSURE	TERMINAL	ELECTRICAL CHARACTERISTICS	TOLERANCE	CONDITION
1	INDUCTANCE	3 - 1 5 - 6 8 - 7	50.0 uH 12.0 uH 12.0 uH	±10% ±25% ±25%	HP-4284A LCR-METER at 100 KHz 1.0 Vrms (25℃)
2	LEAKAGE INDUCTANCE	3 - 1	2.00 uH	MAX	
3	DC RESISTANCE	3 - 1 5 - 6 8 - 7	0.070 Ω 0.100 Ω 0.030 Ω	MAX MAX MAX	CH-502A at 25℃
4	DC CURRENT OVERLAP	3 - 1	40.0 uH	MIN	ZENTECH-1320 at 100KHz,1V with (3.5A) DC
5	WITHSTANDING VOLTAGE	P COIL TO S COIL	AC 1.0 KV r.m.s , 2SEC		CUT OFF CURRENT 5 mA (DU-332)
		P COIL TO CORE	AC 1.0 KV r.m.s , 2SEC		
		S COIL TO CORE	AC 0.5 KV r.m.s , 2SEC		
6	INSULATION RESISTANCE	COIL TO COIL, ANY COIL TO CORE	100 M ohm MIN at DC 500V		CH-19053
7	LAYER SHORT	AC 0.5KV, 60Hz		NO BREAK DOWN	DWX-05 IMPULSE TESTER

* TEST CONDITION : TEMPERATURE 20℃±5℃, HUMIDITY 65%±20%

DONG GUAN TOP NATION ELECTRONIC LIMITED
NO.3 INDUSTRICAL AREA.JUZHOU SHIJIE TOWN DONGGUAN CHINA
TEL:86-769-86632772 FAX:86-769-86315197

DESIGN	CHECK	APPROVAL
H.S HONG	S.J KIM	M.D KIM
FILE NO.	YS19360122	

CUSTOMER : POWERNET TECHNOLOGIES.

SPECIFICATIONS		SHEET NO.	15 OF 46
		DATE	2012. 09. 14.
PART NAME	POWER TRANS	MODEL NAME	PN020STCA
PART NO.	1400423	TYPE	EE2515W

20. MATERIAL LIST

No	Component	Name of Material	Manufacturer Component	Class	UL file No
1	Core	EE2515WC YP2	Young hwa ferrite co.,ltd		
		EE2515WC PL-7	Sam wha electronics co., ltd.		
		EE2515 TP4	TDG Holding co.,ltd		
		EE2515 DMR40	Hengdian Group DMEGC Magnetics co., ltd.		
		EE2515 KP4	Mianyang KAIYUAN magnetism material co., ltd.		
2	Bobbin	94V-0 (PM9820) PHENOL RESIN EE2515W "V TYPE" (6+3 PIN)	Sumitomo bakelite co.,ltd	B	E41429
3	Wire	2UEW 0.30Φ 2UEW 0.50Φ	Heng ya electric (dongguan) ltd.	B	E197768
			Jung Shing wire co.,ltd.	B	E174837
			Shanghai Asia pacific electric co., ltd.	B	E214423
			Heng ya electric kun shan ltd.	B	E245514
4	Core fixing tape	polyester film tape 0.025tx12.5㎜(yellow)	Jingjiang yahua pressure sensitive glue co., ltd(CT)	B	E165111
5	Adhesive	UNIBOND-812 BK(HF)	Green star co.,ltd		
		ES928P-2	Chemtech co.,ltd.		
		SW-860(HF)	Sungwoo chemical co., ltd.		
6	Varnish	DVB-2085(*)	Noroo paint & coatings co ltd.	B	E93947
		ES925-43D#	Chemtech co.,ltd.	B	E258329
7	Solder	LEAD FREE	Solnet metal industry co.,ltd		
			Shenmao technology inc.		
8	Flux	YF-990	Xin yuan co.,ltd.		
9	Marking	INK (BLACK) LABEL(Transparency)	Kk enterprise co.,ltd.		

DONG GUAN TOP NATION ELECTRONIC LIMITED
NO.3 INDUSTRICAL AREA.JUZHOU SHIJIE TOWN DONGGUAN CHINA
TEL:86-769-86632772 FAX:86-769-86315197

DESIGN	CHECK	APPROVAL
H.S HONG	S.J KIM	M.D KIM
FILE NO.	YS19360122	

CUSTOMER : POWERNET TECHNOLOGIES.

SPECIFICATIONS		SHEET NO.	22 OF 46
		DATE	2012. 12. 04.
PART NAME	POWER TRANS	MODEL NAME	PN020STCA
PART NO.	1400423	TYPE	EE2515W

22. EE CORES DIMENSIONS [EE2515W]

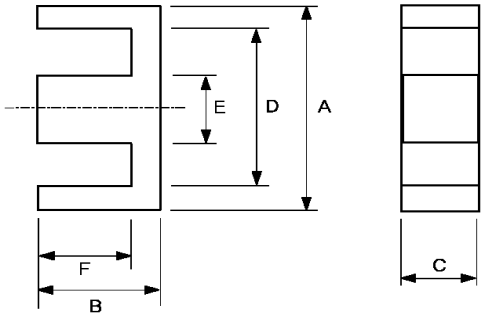

※ CORE INTENSITY STANDARD

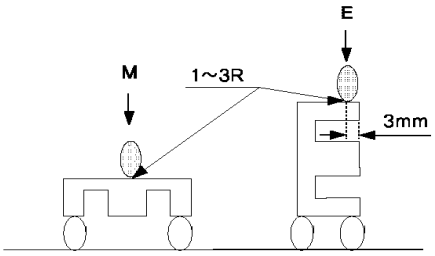

-. TEST CONDITION : AiKOH - 1322
-. FIXED SPEED : 20mm / MIN

TYPE	DIMENSIONS IN MM						EFFECTIVE PARAMETERS			INTENSITY STANDARD (kgf MIN)		Remarks
	A	B	C	D	E	F	le(mm)	Ae(mm²)	Ve(mm³)	M	E	
EE2515WC	25.05 ±0.50	6.95 ±0.15	14.00 ±0.30	17.90 ±0.40	7.25 ±0.25	3.95 ±0.15	38.10	96.70	3687.70	3	3	Young hwa
EE2515WC	25.05 ±0.50	7.00 ±0.15	14.00 ±0.30	17.90 ±0.40	7.25 ±0.25	4.00 ±0.15	36.80	92.52	3404.80	3	3	Sam Wha
EE2515	25.05 ±0.75	6.95 ±0.15	14.00 ±0.30	17.50 MIN	7.25 ±0.25	3.95 ±0.15	37.05	91.25	3380.70	3	3	TDG
EE2515	25.05 ±0.75	6.95 ±0.15	14.00 ±0.30	17.90 ±0.40	7.25 ±0.25	3.95 ±0.15	36.60	91.80	3359.88	3	3	DMEGC
EE2515	25.05 ±0.50	6.95 ±0.15	14.00 ±0.30	17.90 ±0.40	7.25 ±0.25	3.95 ±0.15	38.10	96.70	3687.70	3	3	KAIYUAN

	A	B	C	D	E	F
1	24.93	7.02	13.85	17.80	7.24	4.01
2	24.93	7.03	13.86	17.82	7.25	4.08
3	24.95	7.05	13.84	17.81	7.23	4.06
4	24.96	7.04	13.84	17.80	7.23	4.02
5	24.95	7.06	13.84	17.82	7.24	4.03

DONG GUAN TOP NATION ELECTRONIC LIMITED
NO.3 INDUSTRICAL AREA.JUZHOU SHIJIE TOWN DONGGUAN CHINA
TEL:86-769-86632772 FAX:86-769-86315197

DESIGN	CHECK	APPROVAL
H.S HONG	S.J KIM	M.D KIM
FILE NO.	YS19360122	

CUSTOMER : POWERNET TECHNOLOGIES.

SPECIFICATIONS		SHEET NO.	28 OF 46
		DATE	2012. 12. 04.
PART NAME	POWER TRANS	MODEL NAME	PN020STCA
PART NO.	1400423	TYPE	EE2515W

28. BOBBIN

(UNIT : mm)

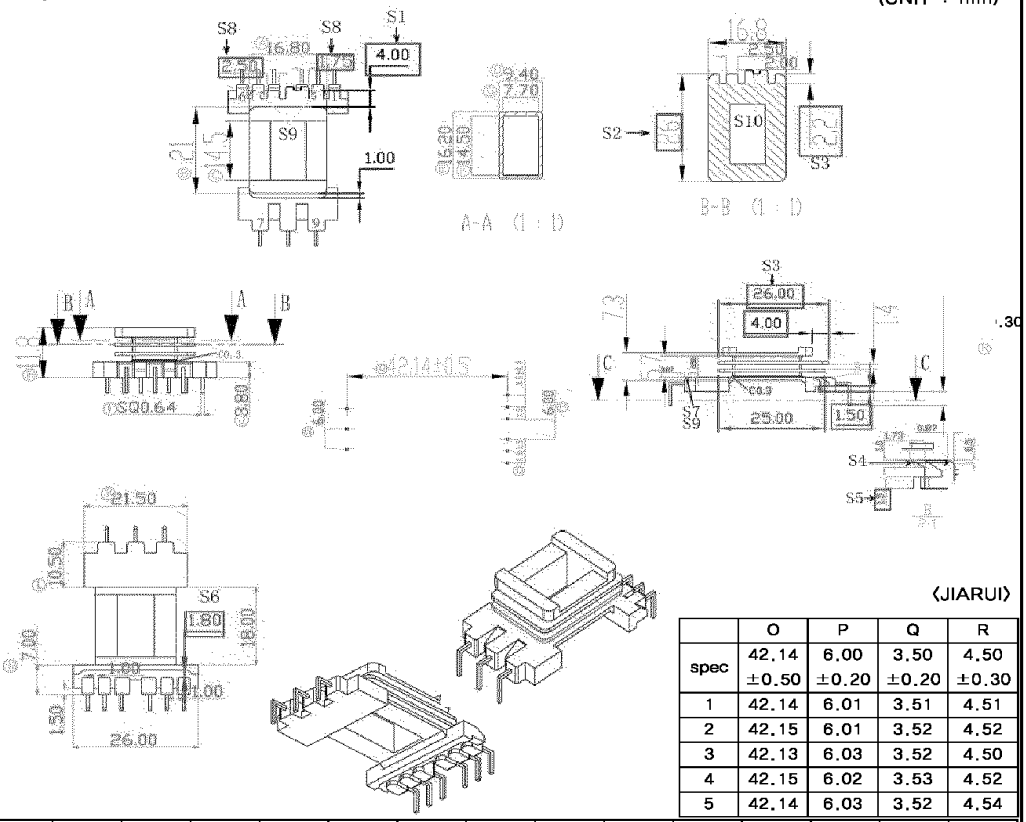

〈JIARUI〉

	O	P	Q	R
spec	42.14 ±0.50	6.00 ±0.20	3.50 ±0.20	4.50 ±0.30
1	42.14	6.01	3.51	4.51
2	42.15	6.01	3.52	4.52
3	42.13	6.03	3.52	4.50
4	42.15	6.02	3.53	4.52
5	42.14	6.03	3.52	4.54

	A	B	C	D	E	F	G	H	I	J	K	L	M	N
spec	16.80 ±0.30	21.00 ±0.30	14.50 ±0.20	9.40 ±0.20	16.20 ±0.30	14.50 ±0.20	7.70 ±0.20	11.80 ±0.20	0.64 ±0.03	3.80 ±0.10	21.50 ±0.30	10.50 ±0.20	7.00 ±0.20	6.00 ±0.20
1	16.81	21.02	14.51	9.41	16.22	14.50	7.71	11.80	0.64	3.81	21.50	10.51	7.02	6.03
2	16.82	21.03	14.52	9.42	16.23	14.52	7.72	11.82	0.63	3.82	21.55	10.53	7.01	6.04
3	16.82	21.03	14.52	9.41	16.21	14.52	7.71	11.81	0.63	3.83	21.54	10.52	7.03	6.06
4	16.80	21.04	14.51	9.42	16.21	14.51	7.73	11.81	0.65	3.83	21.52	10.54	7.02	6.03
5	16.83	21.05	14.49	9.43	16.19	14.53	7.73	11.82	0.63	3.82	21.50	10.53	7.03	6.04

DONG GUAN TOP NATION ELECTRONIC LIMITED
NO.3 INDUSTRICAL AREA.JUZHOU SHIJIE TOWN DONGGUAN CHINA
TEL:86-769-86632772 FAX:86-769-86315197

DESIGN	CHECK	APPROVAL
H.S HONG	S.J KIM	M.D KIM
FILE NO.	YS19360122	

NO.

SPECIFICATIONS

DESCRIPTION	TRANS-POWER S/W
SPECIFICATION	EE2515W(PL-7,HE4,PC40)/50uH
MAKER SPECIFICATION	
PART NO.	1400423
TYPE NO.	
MODEL NO.	PN020STCA
SPECIAL ARTICLES	UL INSULATION SYSTEM (CLASS B / SC-04B YCI-130 SYSTEM)

DESIGN	CHECK	APPROVAL
S.J PARK	G.T KIM	S.J YOO
2012. 11. 26.	2012. 11. 26.	2012. 11. 26.
A TERM OF VALIDITY		YEAR

Indemnification
Clover Hi-Tech will indemnify, hold harmless, and at POWERNET's request, defend POWERNET and POWERNET's directors, officers, employees, agents and independent contractors from and against any loss, cost, liability or expense (including court costs and reasonable fees of attorneys and other professionals) arising out of or resulting from any third party claim that any Products and/or Components provided by Clover Hi-Tech infringes patent, copyright, trade secret right or other intellectual property right. If Clover Hi-Tech receives notice of an alleged patent, copyright, trade secret or other intellectual property right infringement or if POWERNET's use of the Products and/or the Components provided by Clover Hi-Tech shall be prevented by permanent injunction for reasons of patent, copyright or trade secret infringement, Clover Hi-Tech may, at its sole option and expense, procure for POWERNET the right to continued use of the Products and/or the Components as provided hereunder, or modify the allegedly infringing item such that it is no longer infringing, or replace the allegedly infringing item.

REQUEST CUSTOMER	CLOVER Hi-Tech CO., LTD.	TEL	02)453-0488
ADDRESS	HEAD QUARTER : CLOVER BLDG., 131, Samjeon-Dong, Songpa-Gu, Seoul, Korea. FACTORY 1: 322, Sindu-Ri, Gongdo-Eup, Ansung-City, Gyeonggi-Do, Korea. FACTORY 2: 62, Shenzhen Road, Mansanzhen, Wending-City, Shan Dong, China. FACTORY 3: Chang Fa Management Area, Fu Shan Liad Bu Town, Dong Guan-City, Guang Dong P.R.China. FACTORY 4: Wuyishan Road no1 Gaoxin town Zaozhuang city.shandong P.R.,China		

CUSTOMER : POWERNET TECHNOLOGIES.

SPECIFICATIONS		DATE	2012.11.26
PART NAME	TRANS-POWER S/W	PART NO	1400423

6. DIMENSION (UNIT:mm)

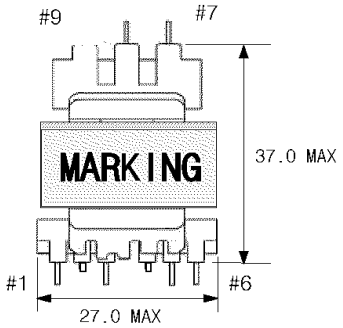

◆TOP VIEW◆

MARKING(BLACK)

1400423 -- PART NO.

SC-04B SC-AABBCCDE-- LOT NO.

MAKER(TRADENAME)

INSULATION SYSTEM DESIGN NO(CLASS-B)

LOT NO

YEAR(AA)	MONTH(BB)	DAY(CC)
2011Y→11 2012Y→12 2013Y→13	JAN→01 FEB→02 DEC→12	1st DAY→01 2nd DAY→02 31thDAY→31

PRODUCT CODE(D)	MANUFACTURER OF CORE(E)
A:KOREA PRODUCT C:CHINA(WENDENG) D:CHINA(DONGGUAN) E:CHINA(ZAOZHUANG)	S:SAMWHA K:DONGYANGGUANG N:JISHUN

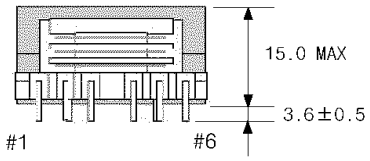

◆FRON VIEW◆

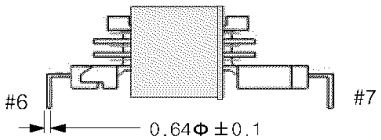

◆SIDE VIEW◆

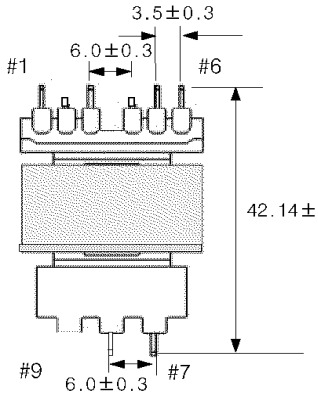

◆BOTTOM VIEW◆

※ CENTER AIR GAP : TOP GAP
※ REMOVE PIN : #9
※ CENTER BOND : SW-860H or ES-928P-2
※ CUTTING AFTER SOLDERING : #2,#4

CLOVER Hi-Tech CO., LTD.	DESIGN	CHECK	APPROVAL	PAGE
	朴秀品 12.11.26 技術部	金基泰 12.11.26 技術部	劉成宰 12.11.26 技術部	5/27

CUSTOMER : POWERNET TECHNOLOGIES.

SPECIFICATIONS		DATE	2012.11.26
PART NAME	TRANS-POWER S/W	PART NO	1400423

7. SCHEMATIC DIAGRAM

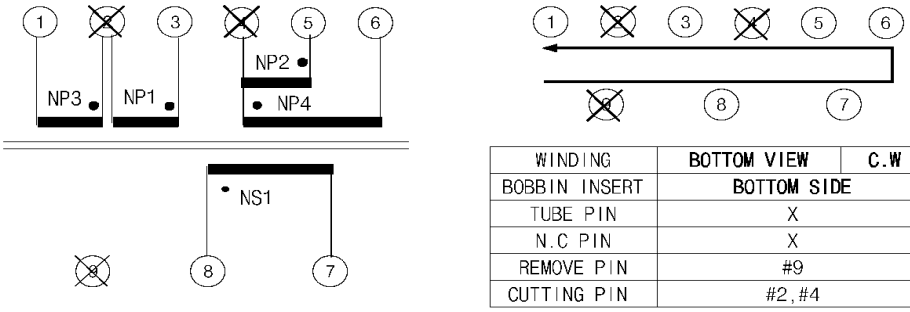

WINDING	BOTTOM VIEW	C.W
BOBBIN INSERT	BOTTOM SIDE	
TUBE PIN	X	
N.C PIN	X	
REMOVE PIN	#9	
CUTTING PIN	#2,#4	

8. WINDING SPECIFICATION

NO	NAME	TERMINAL NO.		WINDING			
		START	FINISH	WIRE	TURNS	WINDING METHOD	SECTION
1	NP1	3	2	2UEW 0.50φ	4	SOLENOID	A
2	NP2	5	4	2UEW 0.30φ	2	SOLENOID	
3	NS1	8	7	2UEW 0.50φ	4	SOLENOID	B
4	NP3	2	1	2UEW 0.50φ	4	SOLENOID	C
5	NP4	4	6	2UEW 0.30φ	2	SOLENOID	

WIRE SPECIFICATION	CONDUCTOR		
	WIRE	DIAMETER[mm]	TOLERANCE OF DIAMETER[mm]
	2UEW	0.30	±0.003
	2UEW	0.50	±0.003

* REGARDING ABOVE TABLE STANDARD, THICKNESS OF WIRE MUST BE OVER SPECIFICATION.

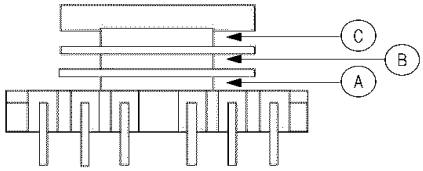

CLOVER Hi-Tech CO., LTD.	DESIGN	CHECK	APPROVAL	PAGE
	朴秀品 12.11.26 技術部	金基泰 12.11.26 技術部	劉成宰 12.11.26 技術部	6/27

CUSTOMER : POWERNET TECHNOLOGIES.

SPECIFICATIONS		DATE	2012.11.26
PART NAME	TRANS-POWER S/W	PART NO	1400423

14. CONSTRUCTION

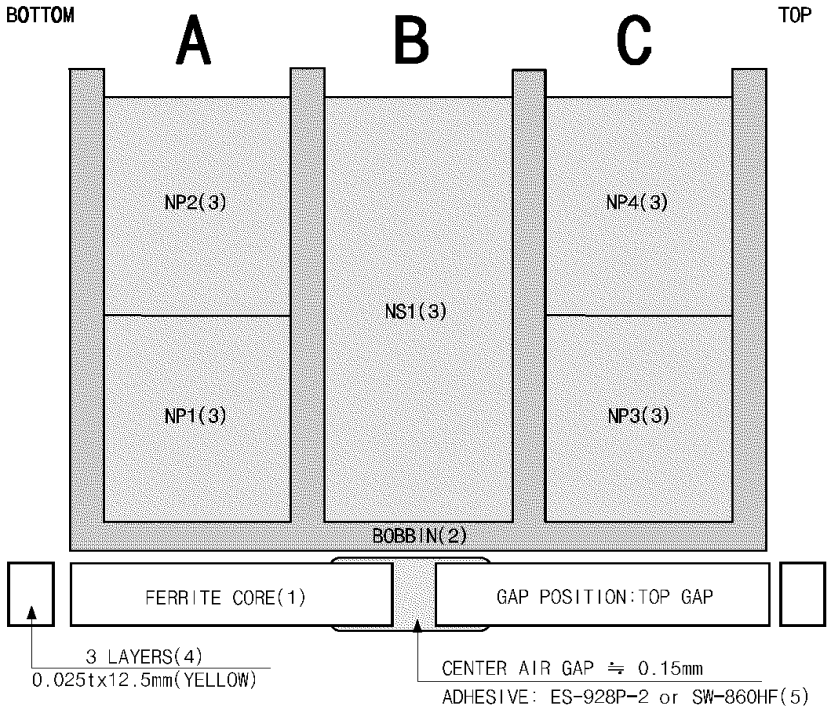

- WINDING :
- PS TAPE :

CLOVER Hi-Tech CO., LTD.	DESIGN	CHECK	APPROVAL	PAGE
	朴秀品 12.11.26 技術部	金基泰 12.11.26 技術部	劉成宰 12.11.26 技術部	10/27

CUSTOMER : POWERNET TECHNOLOGIES.

SPECIFICATIONS		DATE	2012.11.26
PART NAME	TRANS-POWER S/W	PART NO	1400423

15. ELECTRICAL CHARACTERISTIC

NO	ITEM	TERMINAL	SPECIFICATION		REMARKS
1	INDUCTANCE	3 - 1	50 uH	±10%	LCR METER HP-4284A at 100KHz,1V.
		5 - 6	12.0 uH	±25%	
		8 - 7	12.0 uH	±25%	
	LEAKAGE INDUCTANCE	3 - 1 (SECONDARY ALL SHORTED)	2.0 uH	MAX.	
2	DC RESISTANCE	3 - 1	0.07 Ω	MAX.	MILLI OHM METER VP-2941A
		5 - 6	0.10 Ω		
		8 - 7	0.03 Ω		
3	DC CURRENT OVERLAP	3 - 1	40 uH	MIN.	at 100 kHz, 1V. with 3.5Adc
4	WITHSTANDING VOLTAGE	P COIL - S COIL	AC 1.0kVrms, 2SEC.		PUNCTURE TESTER TOS-8850 CUT OFF CURRENT (5mA)
		P COIL - CORE	AC 1.0kVrms, 2SEC.		
		S COIL - CORE	AC 0.5kVrms, 2SEC.		
5	INSULATION RESISTANCE	COIL - CORE COIL - COIL	DC 500V, 100MΩ MIN.		PUNCTURE TESTER TOS-8850
6	LAYER SHORT	AC 1.5KV, 60Hz			NO BREAK DOWN

* TEST CONDITION : TEMPERATURE 20℃±5℃, HUMIDITY 65%±20%

CLOVER Hi-Tech CO., LTD.	DESIGN	CHECK	APPROVAL	PAGE
	朴秀品 12.11.26 技術部	金基泰 12.11.26 技術部	劉成宰 12.11.26 技術部	11/27

CUSTOMER : POWERNET TECHNOLOGIES.

SPECIFICATIONS		DATE	2012.11.26
PART NAME	TRANS-POWER S/W	PART NO	1400423

16. LIST OF MATERIAL

NO	COMPONENT	NAME OF MATERIAL	MANUFACTURER OF MATERIAL	UL FILE NO
1	CORE	PL-7 EE2515W HE4 EE2515W PC40 EE2515W	SAMWHA ELECTORNICS CO., LTD. RUYUAN DONGYANGGUANG MAGNETICS MATERIALS CO., LTD. SHANGHAI JISHUN MAGNETIC MATERIAL CO.,LTD.	
2	BOBBIN	PHENOLIC 94V-0 EE2515W V"TYPE 9PIN(6+3)	SUMITOMO BAKELITE CO.,LTD.(PM-9820)	E41429
3	WIRE	2UEW 0.30Ø 0.50Ø	DONGYANG ELECTRONICS IND CO.,LTD.(UEW MW75) CNI CABLE CO.,LTD.(UEW MW75)	E102761 E210918
4	CORE FIXING TAPE	POLYESTER FILM TAPE 0.025T×12.5W(Y)	METAL LINE CO.,LTD.(Cat.No. 800(a)) JINGJIANG YAHUA PRESSURE SENSITIVE GLUE CO.,LTD.(Cat.No. PZ)	E162848 E165111
5	ADHESIVE	EPOXY RESIN ES-928P-2 SW-860HF	CHEM TECH CO.,LTD. SUNGWOO CHEMICAL CO.,LTD.	
6	SOLDER	BAR, WIRE	ALPHA METALS CO.,LTD.	
	FLUX	EF-9301 JS-7000S-2	ALPHA METALS CO.,LTD. KOKI KOREA CO.,LTD.	
7	VARNISH	DVB-2085(*)	NOROO PAINT & COATINGS CO.,LTD.	E93947
8	MARKING	INK(Black)	HITACHI CHEMICAL CO.,LTD.	

CLOVER Hi-Tech CO., LTD.	DESIGN	CHECK	APPROVAL	PAGE
	朴秀品 12.11.26 技術部	金基泰 12.11.26 技術部	劉成宰 12.11.26 技術部	16/27

CUSTOMER : POWERNET TECHNOLOGIES.

SPECIFICATIONS		DATE	2012.11.26
PART NAME	TRANS-POWER S/W	PART NO	1400423

※ CORE DIMENSION ※

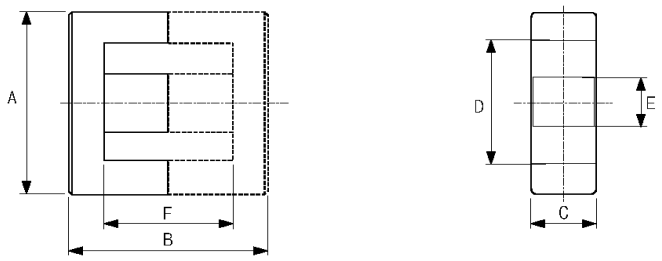

TYPE	DIMENSION(mm)						EFFECTIVE PARAMETER			REMARKS
	A	B	C	D	E	F	Le(mm)	Ae(㎟)	Ve(㎤)	
EE2515W	25.05 ±0.5	7.00 ±0.15	14.00 ±0.30	17.90 ±0.40	7.25 ±0.25	4.00 ±0.15	36.8	92.52	3404.8	SAMWHA
EE2515W	25.05 ±0.5	7.00 ±0.15	14.00 ±0.30	17.90 ±0.40	7.25 ±0.25	4.00 ±0.15	36.83	92.36	3402.4	DONGYANG GUANG
EE2515W	25.05 ±0.5	7.00 ±0.15	14.00 ±0.30	17.90 ±0.40	7.25 ±0.25	4.00 ±0.15	36.83	92.36	3402.4	JISHUN

CLOVER Hi-Tech CO., LTD.	DESIGN	CHECK	APPROVAL	PAGE
	朴秀品 12.11.26 技術部	金基泰 12.11.26 技術部	劉成宰 12.11.26 技術部	17/27

CUSTOMER : POWERNET TECHNOLOGIES.

SPECIFICATIONS		DATE	2012.11.26
PART NAME	TRANS-POWER S/W	PART NO	1400423

※ BOBBIN DIMENSION ※

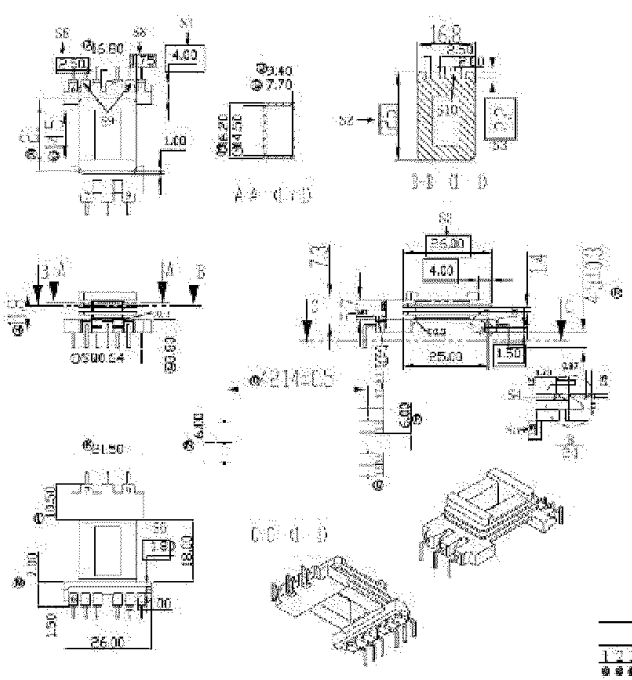

CLOVER Hi-Tech CO., LTD.	DESIGN	CHECK	APPROVAL	PAGE
	朴秀品 12.11.26 技術部	金基泰 12.11.26 技術部	劉成宰 12.11.26 技術部	21/27

NO	TC-1007-1

SPECIFICATIONS

TO MESSRS : 파워넷

CUSTOMERS MODEL :

CUSTOMERS PART NO :

ITEM : LINE FILTER

TNC SPEC NO. : CV430060SHA

APPROVED	REFERENCE

DATE : 2012. 10. 18

TNC (株)TNC

#304-29 Asan Valley, DunPo-Myeon, Asan-Si, Chung Cheong Nam-Do, KOREA 336-871
TEL : 82-41-530-9600
FAX : 82-41-530-9697

NOTICE : After received this approval sheet and finished it's approval, please return back one copy. In case of you don't any reply until initial order date, this approval sheet is to be standard approval and initial order date is to be approved date for concerning item.

SPECIFICATIONS	ITEM	LINE FILTER	Rev
	TNC SPEC NO	CV430060SHA	0

2. ELECTRICAL CHARACTERISTIC

NO	ITEM	TERMINAL	SPECIFICATION			REMARKS
1	RATED VOLTAGE	LINE TO LINE	AC 250V			
2	RATED CURRENT	START-FINISH	3.0A			
3	INDUCTANCE	START-FINISH	16KHz	6.0mH	+50%, -30%	HP-4194A 1V (25℃±2℃)
4	TEMPERATURE RISE	AT RATED CURRENT	55℃ MAX			
5	DC RESISTANCE	START-FINISH	92.0 mΩ MAX			HIOKI 3540 (25℃±2℃)
6	WITHSTANDING VOLTAGE	LINE TO LINE	AC 1,500V 1 MINUTE.			TOS-5101 CUT OFF CURRENT (0.5mA)
7	INSULATION RESISTANCE	LINE TO COVER	DC 500V, 300MΩ MIN.			TOS-8850

3. OPERATING TEMPERATURE RANGE

-25℃ TO +120℃ INCLUDING TEMPERATURE RISE.

4. KEEP TEMPERATURE RANGE

-10℃ ~ +60℃.

5. CIRCUIT DIAGRAM

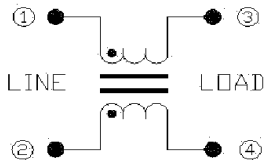

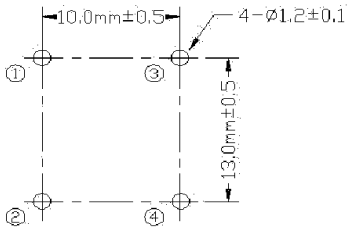

Minimum PCB Piercing HOLE

TNC CO.,LTD	DESIGN	CHECK	APPROVAL	PAGE
	CHOI.J.K 12.09.20 R&D	CHO.B.O 12.09.20 R&D	HWANG.S.H 12.09.20 R&D	3/13

SPECIFICATIONS	ITEM	LINE FILTER	Rev
	TNC SPEC NO	CV430060SHA	0

6. WINDING SPECIFICATION

NO	TERMINAL		WIRE	TURNS	WINDING METHOD	UNBALANCE SPECIFICATION
	START	FINISH				
L1	1	3	UEW 0.55Φ	28 ±2Ts	HANDMADE	BETWEEN L1 AND L2 (0.4mH MAX)
L2	2	4				

7. SHAPE AND DIMENSION

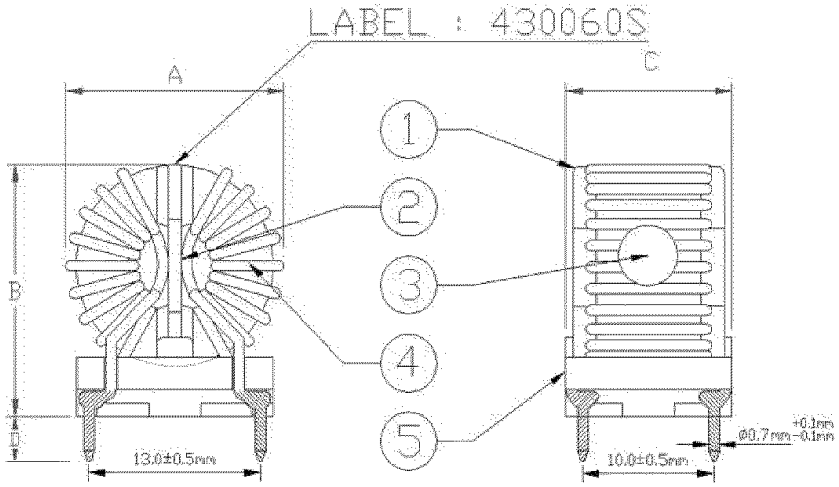

DIMENSION	A	B	C	D
	18.0mm MAX	18.0mm MAX	14.5mm MAX	4.0 ± 1.0mm

TNC CO.,LTD	DESIGN	CHECK	APPROVAL	PAGE
	CHOI.J.K 12.09.20 R&D	CHO.B.O 12.09.20 R&D	HWANG.S.H 12.09.20 R&D	4/13

SPECIFICATIONS	ITEM	LINE FILTER	Rev
	TNC SPEC NO	CV430060SHA	0

8. MATERIAL LIST

No.	NAME	SPECIFICATION		MANUFACTURER	COLOR	UL No.
1 / 2	Core Cover / Core Separator	NYLON A 50H1(r3)(f2)		RHODIA ENGINEERING PLASTICS	BLACK	E44716
		PBT LUPOX GP-2156F		LG Chemical Ltd	WHITE	E67171
		PBT 1500GN-(k)		SAM YANG Corporation	WHITE	E121254
3	Ferrite Core	MA100 R-14-8-7 HM5A T 1407 SM100 OR 14X7-8H		JFE Ferrite Corp TODA ISU Ceramics Co.,Ltd SAMHWA ELECTRONICS	BLACK	
4	Enamel Wire	UEW 0.55Φ / 28±2Ts	UEW(B)	Dongyang Electronics Ind Co.,Ltd	YELLOW	E102761
			UEW	Hwa Il Electronics Co.,Ltd	YELLOW	E140246
5	Coil Base	Phenolic (PF2736) UL 94 V-0 Class		MOMENTIVE Specialty Chemical Gmbh	BLACK	E61040
		Phenolic (T375HF) UL 94 V-0 Class		CHANG CHUN Plastics Co.,Ltd	BLACK	E59481

9. MARKING

MODEL	LABEL	COLOR
CV430060SHA	430060S	Black letters on White

TNC CO.,LTD	DESIGN	CHECK	APPROVAL	PAGE
	CHOI.J.K 12.09.20 R&D	CHO.B.O 12.09.20 R&D	HWANG.S.H 12.09.20 R&D	5/13

SPECIFICATIONS	ITEM	LINE FILTER	Rev
	TNC SPEC NO	CV430060SHA	0

15. FERRITE CORE SPECIFICATION

- Characteristics

Symbol	Unit	MA100 R-14/8/7	HM5A T 1407	SM100 OR 14X7-8H
μi	-	10,000±30%	10,000±30%	10,000±25%
Bms	mT	415	410	410
Hcms	A/m	3.0	3.0	3.0
Brms	mT	76	80	90
Tc	℃	>115	>115	>120
TANδ /μiac	$*10^{-6}$	<1.9	<6.0	<3.0
αμr	$*10^{-6}$ /℃	-0.5~2.0	-0.15~1.0	-0.5~2.0
ρ	Ω.m	0.1	0.13	0.2
d	g/㎤	5.0	4.9	4.95

- Dimension

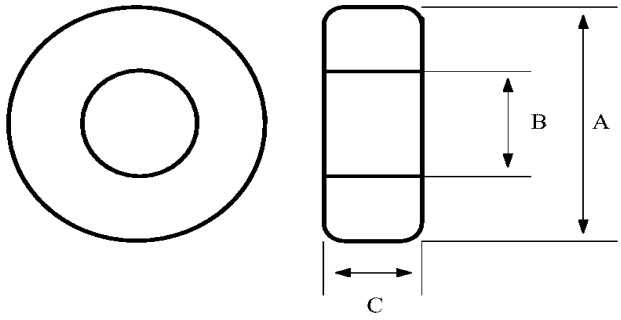

A: 14.0 ±0.35 **B:** 8.0 ±0.30 **C:** 7.0 ±0.3

TNC CO.,LTD	DESIGN	CHECK	APPROVAL	PAGE
	CHO.I.J.K 12.09.20 R&D	CHO.B.O 12.09.20 R&D	HWANG.S.H 12.09.20 R&D	9/13

PN개발-승- 12255
- 최초 제품승인배포 : 2012.12.27
- 최도승인 재배포 : 2013.01.02
→ 재 배포 사유 : 사양 변경 (0.45Ø 14mH → 0.43Ø 19.5mH)
- 정식승인 배포 : 2013.01.15
→ 변경내용 (0.43Ø 19.5mH → 0.45Ø 14mH)
- 정식승인 재배포 : 2013.01.17
→ 변경내용 : 17page 표 수정
0.47Ø 14mH → 0.47Ø 14mH

SPECIFICATIONS

	LINE FILTER
SPECIFICATION	14.0mH EE2020 (TL13)
MAKER SPECIFICATION	SQE2020 / YS19320028
CODE NO	1420603-A03
MODEL NO	L32,46SF_DPN
SPECIAL ARTICLES	

APPROVAL
Powernet Doc
Dong ok

MODEL:
품질관리 도장 승인
CHECK
(주)파워넷연구소

2013.01.18
APPROVAL

DESIGN	CHECK	APPROVAL
H.S HONG	S.J KIM	M.D KIM
2013. 01. 16.	2013. 01. 16.	2013. 01. 16.
A TERM OF VALIDITY		YEAR

REQUEST CUSTOMER	YAO SHENG ELECTRONIC CO.,LTD	TEL	(02)22693789
		FAX	(02)22696759
ADDRESS	10F., NO.95, ZHONGCHENG RD., TUCHENG CITY, TAIPEI COUNTY 236, TAIWAN R.O.C		
REQUEST CUSTOMER	DONG GUAN TOP NATION ELECTRONIC LIMITED	TEL	86-769-86632772
		FAX	86-769-86315197
ADDRESS	NO.3 INDUSTRICAL AREA,JUZHOU SHIJIE TOWN DONGGUAN GUANGDONG CHINA		
REQUEST CUSTOMER	TOP NATION(SU ZHOU) ELECTRONIC LIMITED	TEL	86-512-63271988
		FAX	86-512-63271990
ADDRESS	WUJIANG FENHU ECONOMIC DEVELOPMENT ZONE JIANGSU PROVINCE CHINA		

CUSTOMER : POWERNET TECHNOLOGIES.

SPECIFICATIONS		SHEET NO.	4 OF 30
		DATE	2013. 01. 15.
PART NAME	LINE FILTER	MODEL NAME	L32,46SF_DPN
PART NO.	1420603	TYPE	SQE2020

6. APPEARANCE & DIMENSION

※ MARKING(BLACK) : 1420603 TNS1301CT

1420603	PART No.								
TN	DONG GUAN TOP NATION							CHINA FACTORY ID	
TNS	TOP NATION(SU ZHOU)								
13	Lot No	Year	2013 : 13 2014 : 14...						
01		Week	First Week : 01 Second Week : 02...						
C	DAY	MON	TUE	WED	THU	FRI	SAT	SUN	
		A	B	C	D	E	F	G	
T	MANUFACTURER OF CORE								
	T	TDG							

《 TOP VIEW 》

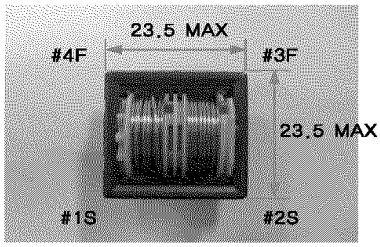

《 SIDE VIEW 》

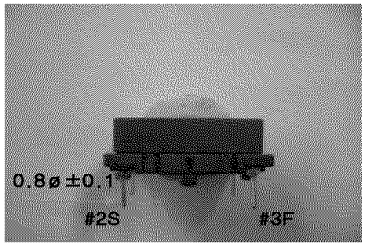

《 FRONT VIEW 》

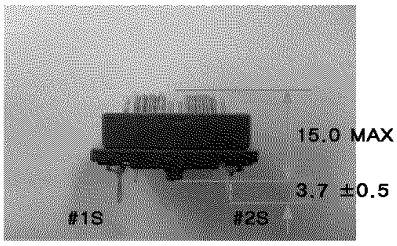

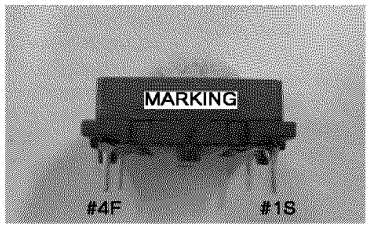

《 BOTTOM VIEW 》

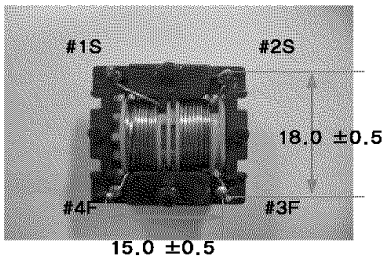

* PIN 도금 사양

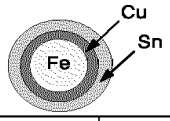

DONG GUAN TOP NATION ELECTRONIC LIMITED

NO. 3 INDUSTRICAL AREA, JUZHOU SHIJIE TOWN DONGGUAN GUANGDONG CHINA

TEL:86-769-86632772 FAX:86-769-86315197

DESIGN	CHECK	APPROVAL
H.S HONG	S.J KIM	M.D KIM
FILE NO.	YS19320028	

CUSTOMER : POWERNET TECHNOLOGIES.

SPECIFICATIONS		SHEET NO.	5 OF 30
		DATE	2013. 01. 15.
PART NAME	LINE FILTER	MODEL NAME	L32,46SF_DPN
PART NO.	1420603	TYPE	SQE2020

7. SCHEMATIC DIAGRAM

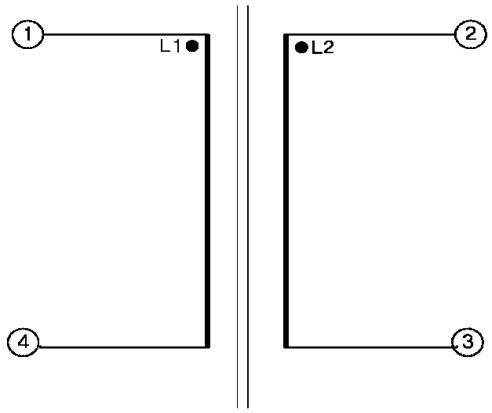

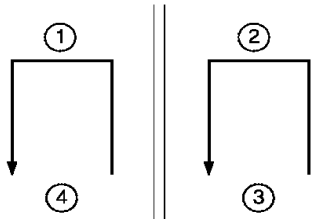

WINDING	BOTTOM VIEW	C.C.W
BOBBIN INSERT	SIDE INSERT	
REMOVE PIN	-	
N.C PIN	-	
CUT PIN	-	
TUBE PIN	-	

8. WINDING SPECIFICATION

WINDING ORDER	SYMBOL	TERMINAL NO		WIRE	TURNS	WINDING METHOD	REMARKS
W1	L1	1	4	2UEW 0.45φ	47±1	SOLENOID	
W2	L2	2	3	2UEW 0.45φ	47±1	SOLENOID	

WIRE SPECIFICATION	CONDUCTOR		
	WIRE	DIAMETER(mm)	TOLERANCE OF DIAMETER(mm)
	2UEW	0.45	±0.003

◇ REGARDING ABOVE TABLE STANDARD, THICKNESS OF WIRE MUST BE OVER SPECIFICATION RANGE.

DONG GUAN TOP NATION ELECTRONIC LIMITED
NO.3 INDUSTRICAL AREA, JUZHOU SHIJIE TOWN DONGGUAN GUANGDONG CHINA
TEL:86-769-86632772 FAX:86-769-86315197

DESIGN	CHECK	APPROVAL
H.S HONG	S.J KIM	M.D KIM
FILE NO.	YS19320028	

CUSTOMER : POWERNET TECHNOLOGIES.

SPECIFICATIONS		SHEET NO.	7 OF 30
		DATE	2013. 01. 15.
PART NAME	LINE FILTER	MODEL NAME	L32,46SF_DPN
PART NO.	1420603	TYPE	SQE2020

15. ELECTRICAL CHARACTERISTIC

No	CLOSURE	TERMINAL	ELECTRICAL CHARACTERISTICS	TOLERANCE	CONDITION
1	INDUCTANCE	1 - 4	14.0 mH	±35%	HP-4284A LCR-METER at 100 KHz 1.0 Vrms (25℃)
		2 - 3			
2	DIFFERENCE INDUCTANCE	| L1 - L2 |	0.75 mH	MAX	
3	DC RESISTANCE	1 - 4	0.240 Ω	MAX	CH-502A at 25℃
		2 - 3			
5	WITHSTANDING VOLTAGE	COIL TO COIL	AC 0.5 KV r.m.s , 1 MINUTE		CUT OFF CURRENT 5 mA (DU-332)
		COIL TO CORE	AC 0.5 KV r.m.s , 1 MINUTE		
6	INSULATION RESISTANCE	COIL TO COIL, ANY COIL TO CORE	100 M ohm MIN at DC 500V		CH-19053
7	LAYER SHORT	AC 1.5KV, 60Hz		NO BREAK DOWN	DWX-05 IMPULSE TESTER

* TEST CONDITION : TEMPERATURE 20℃±5℃, HUMIDITY 65%±20%

DONG GUAN TOP NATION ELECTRONIC LIMITED

NO. 3 INDUSTRICAL AREA, JUZHOU SHIJIE TOWN DONGGUAN GUANGDONG CHINA

TEL:86-769-86632772 FAX:86-769-86315197

DESIGN	CHECK	APPROVAL
H.S HONG	S.J KIM	M.D KIM
FILE NO.	YS19320028	

CUSTOMER : POWERNET TECHNOLOGIES.

SPECIFICATIONS		SHEET NO.	10 OF 30
		DATE	2013. 01. 15.
PART NAME	LINE FILTER	MODEL NAME	L32,46SF_DPN
PART NO.	1420603	TYPE	SQE2020

17. CONSTRUCTION

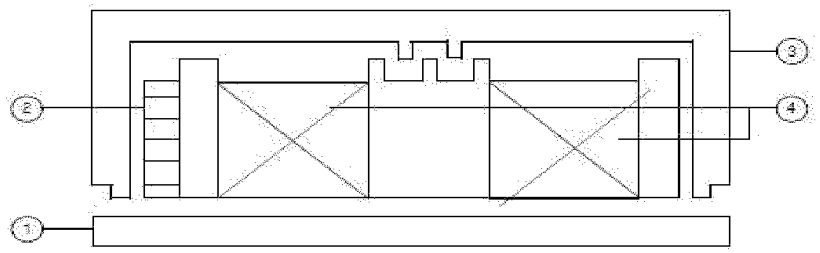

18. MATERIAL LIST

No	Component	Name of Material	Manufacturer Component	Class	UL file No
1	Core	SQE2020 TL13	TDG Holding co.,ltd		
2	Bobbin	94V-0 (PF2736(a)(b)) PHENOL RESIN SQE2020 "H" (4P)	Momentive specialty chemicals gmbh co.,ltd	B	E61040
3	Gear	94V-0 P.E.T (FR530) SQE2020(2F)	E I dupont de nemours & co., inc	F	E41938
4	Wire	2UEW 0.45Φ	Jung Shing wire co.,ltd.	B	E174837
			Shanghai Asia pacific electric co., ltd.	B	E214423
			Heng ya electric kun shan ltd.	B	E245514
5	Varnish	DVB-2085(*)	Noroo paint & coatings co ltd.	B	E93947
		ES925-43D#	Chemtech co.,ltd.	B	E258329
6	Solder	LEAD FREE	Solnet metal industry co.,ltd		
			Shenmao technology inc.		
7	Flux	YF-990	Xin yuan co.,ltd.		
8	Marking	INK(black) LABEL(transparency)	Kk enterprise co.,ltd.		

DONG GUAN TOP NATION ELECTRONIC LIMITED
NO.3 INDUSTRICAL AREA,JUZHOU SHIJIE TOWN DONGGUAN GUANGDONG CHINA
TEL:86-769-86632772 FAX:86-769-86315197

DESIGN	CHECK	APPROVAL
H.S HONG	S.J KIM	M.D KIM
FILE NO.	YS19320028	

CUSTOMER : POWERNET TECHNOLOGIES.

SPECIFICATIONS		SHEET NO.	15 OF 30
		DATE	2013. 01. 15.
PART NAME	LINE FILTER	MODEL NAME	L32,46SF_DPN
PART NO.	1420603	TYPE	SQE2020

18. UU CORES DIMENSIONS (UNIT : mm)

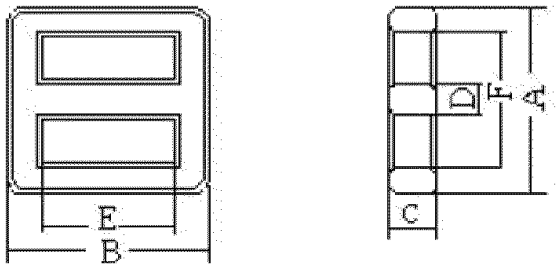

TYPE	DIMENSIONS IN MM						EFFECTIVE PARAMETERS			Remarks
	A	B	C	D	E	F	le(mm)	Ae(mm²)	Ve(mm³)	
UU1014S	20.10 ±0.40	20.10 ±0.40	5.40 ±0.20	4.00 ±0.20	15.90 MIN	15.90 MIN	50.77	22.05	1119.5	TDG

	A	B	C	D	E	F
1	20.12	20.18	5.42	4.06	15.96	15.97
2	20.18	20.18	5.47	4.07	15.92	15.96
3	20.18	20.15	5.45	4.05	15.92	15.98
4	20.18	20.13	5.47	4.06	15.98	15.97
5	20.17	20.16	5.46	4.06	15.97	15.99

DONG GUAN TOP NATION ELECTRONIC LIMITED
NO.3 INDUSTRICAL AREA, JUZHOU SHIJIE TOWN DONGGUAN GUANGDONG CHINA
TEL:86-769-86632772 FAX:86-769-86315197

DESIGN	CHECK	APPROVAL
H.S HONG	S.J KIM	M.D KIM
FILE NO.	YS19320028	

CUSTOMER : POWERNET TECHNOLOGIES.

SPECIFICATIONS		SHEET NO.	17 OF 30
		DATE	2013. 01. 15.
PART NAME	LINE FILTER	MODEL NAME	L32,46SF_DPN
PART NO.	1420603	TYPE	SQE2020

20. BOBBIN DIMENSIONS (UNIT : mm)

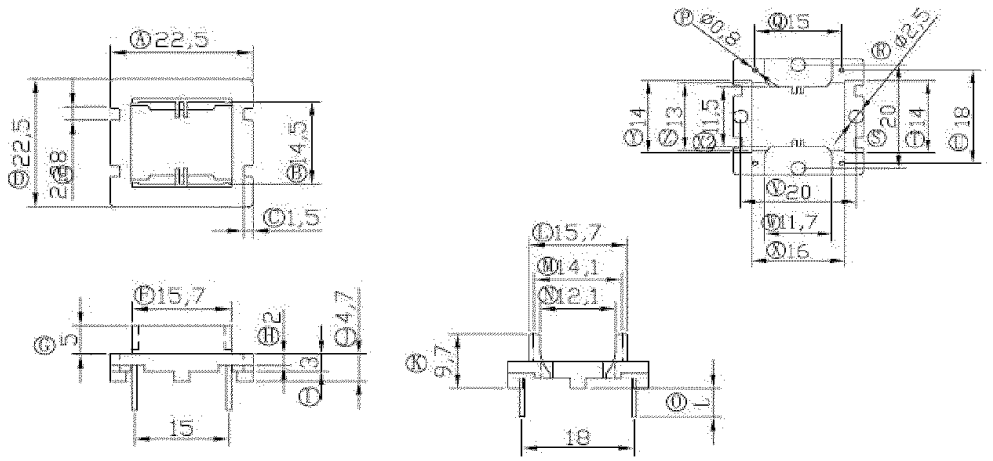

〈DONG YUAN〉

	P	Q	R	S	T	U	V	W	X	Y	Z
	0.80 ±0.10	15.00 ±0.20	2.50 ±0.10	20.00 ±0.30	14.00 ±0.20	18.00 ±0.30	20.00 ±0.10	11.70 ±0.20	16.00 ±0.20	14.00 ±0.20	13.00 ±0.20
	0.81	15.01	2.52	20.00	14.01	18.00	20.00	11.71	16.01	14.00	13.01
	0.80	15.00	2.55	20.01	14.05	18.01	20.01	11.70	16.02	14.02	13.02
	0.80	15.00	2.52	20.00	14.00	18.00	20.00	11.71	16.01	14.01	13.01
	0.85	15.05	2.51	20.00	14.02	18.00	20.00	11.72	16.03	14.02	13.03
	0.82	15.02	2.51	20.02	14.01	18.03	20.00	11.71	16.03	14.03	13.00

	A	B	C	D	E	F	G	H	I	J	K	L	M	N	O
Spec	22.50 ±0.30	14.50 ±0.20	1.50 ±0.10	22.50 ±0.30	2.28 ±0.10	15.70 ±0.20	5.00 ±0.20	2.00 ±0.10	3.00 ±0.10	4.70 ±0.20	9.70 ±0.20	15.70 ±0.20	14.10 ±0.20	12.10 ±0.20	3.70 ±0.10
1	22.51	14.01	1.51	22.51	2.32	15.72	5.02	2.01	3.01	4.72	9.71	15.71	14.11	12.11	3.71
2	22.50	14.02	1.53	22.51	2.30	15.71	5.01	2.00	3.00	4.70	9.72	15.70	14.12	12.12	3.72
3	22.53	14.05	1.53	22.52	2.31	15.72	5.04	2.02	3.00	4.71	9.70	15.72	14.11	12.11	3.71
4	22.51	14.02	1.52	22.50	2.29	15.73	5.00	2.02	3.01	4.71	9.71	15.72	14.13	12.13	3.73
5	22.52	14.03	1.51	22.52	2.29	15.69	5.02	2.00	3.02	4.73	9.72	15.70	14.13	12.13	3.73

DONG GUAN TOP NATION ELECTRONIC LIMITED
NO.3 INDUSTRICAL AREA, JUZHOU SHIJIE TOWN DONGGUAN GUANGDONG CHINA
TEL:86-769-86632772 FAX:86-769-86315197

DESIGN	CHECK	APPROVAL
H.S HONG	S.J KIM	M.D KIM
FILE NO.	YS19320028	

CUSTOMER : POWERNET TECHNOLOGIES.

SPECIFICATIONS		SHEET NO.	18 OF 30
		DATE	2013. 01. 15.
PART NAME	LINE FILTER	MODEL NAME	L32,46SF_DPN
PART NO.	1420603	TYPE	SQE2020

21. GEAR DIMENSIONS (UNIT : mm)

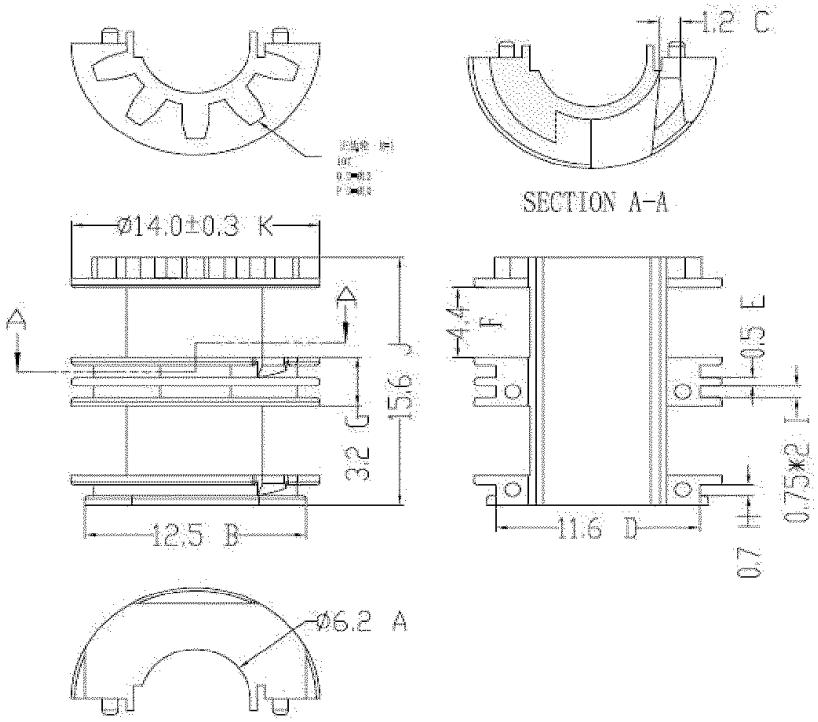

(DONG YUAN)

	A	B	C	D	E	F	G	H	I	J	K
Spec	6.20 ±0.20	12.50 ±0.20	1.20 ±0.10	11.60 ±0.20	0.50 ±0.10	4.40 ±0.20	3.20 ±0.10	0.70 ±0.10	0.75 ±0.10	15.60 ±0.20	14.00 ±0.20
1	6.21	12.51	1.21	11.62	0.52	4.42	3.22	0.71	0.75	15.62	14.01
2	6.20	12.52	1.23	11.66	0.53	4.41	3.21	0.70	0.78	15.60	14.02
3	6.22	12.55	1.23	11.66	0.51	4.42	3.24	0.72	0.77	15.61	14.00
4	6.21	12.52	1.22	11.65	0.52	4.43	3.23	0.72	0.76	15.61	14.01
5	6.22	12.53	1.21	11.65	0.52	4.43	3.22	0.70	0.79	15.63	14.02

DONG GUAN TOP NATION ELECTRONIC LIMITED
NO.3 INDUSTRICAL AREA, JUZHOU SHIJIE TOWN DONGGUAN GUANGDONG CHINA
TEL:86-769-86632772 FAX:86-769-86315197

DESIGN	CHECK	APPROVAL
H.S HONG	S.J KIM	M.D KIM
FILE NO.	YS19320028	

PN개발-승- 13171
최초발행

MODEL: L32SF_DPN
담당 검토 승인
2013/ 6/ 24
(주)파워넷연구소

APPROVAL
Powernet Doc
RoHS 이행

NO.

SPECIFICATIONS

DESCRIPTION	LINE FILTER
SPECIFICATION	SQE2020(SM-100,HL10,JSH10K)/14.0mH
MAKER SPECIFICATION	
PART NO.	1420603
TYPE NO.	SQE2020
MODEL NO.	L32,46SF_DPN , L32SFN-DPN
SPECIAL ARTICLES	

접수 No.
2013.06. 24
(주)파워넷 연구소

DESIGN	CHECK	APPROVAL
S.J PARK	G.T KIM	S.J YOO
2013. 01. 15.	2013. 01. 15.	2013. 01. 15.
A TERM OF VALIDITY		YEAR

Indemnification
Clover Hi-Tech will indemnify, hold harmless, and at POWERNET's request, defend POWERNET and POWERNET's directors, officers, employees, agents and independent contractors from and against any loss, cost, liability or expense (including court costs and reasonable fees of attorneys and other professionals) arising out of or resulting from any third party claim that any Products and/or Components provided by Clover Hi-Tech infringes patent, copyright, trade secret right or other intellectual property right. If Clover Hi-Tech receives notice of an alleged patent, copyright, trade secret or other intellectual property right infringement or if POWERNET's use of the Products and/or the Components provided by Clover Hi-Tech shall be prevented by permanent injunction for reasons of patent, copyright or trade secret infringement, Clover Hi-Tech may, at its sole option and expense, procure for POWERNET the right to continued use of the Products and/or the Components as provided hereunder, or modify the allegedly infringing item such that it is no longer infringing, or replace the allegedly infringing item.

REQUEST CUSTOMER	CLOVER Hi-Tech CO., LTD.	TEL	02)453-0488
ADDRESS	HEAD QUARTER : CLOVER BLDG., 131, Samjeon-Dong, Songpa-Gu, Seoul, Korea. FACTORY 1: 322, Sindu-Ri, Gongdo-Eup, Ansung-City, Gyeonggi-Do, Korea. FACTORY 2: 62, Shenzhen Road, Mansanzhen, Wendeng-City, Shan Dong, China. FACTORY 3: Chang Fa Management Area, Fu Shan Liad Bu Town, Dong Guan-City, Guang Dong P.R.China. FACTORY 4: Wuyishan Road no1 Gaoxin town Zaozhuang city.shandong P.R.,China.		

CUSTOMER : POWERNET TECHNOLOGIES.

SPECIFICATIONS		DATE	2013.01.16
PART NAME	LINE FILTER	CODE NO	1420603

6. DIMENSION (UNIT:mm)

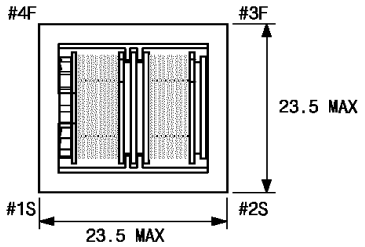

TOP VIEW

MARKING(BLACK)

1420603 SC-AABBC ----- LOT NO.

- PRODUCT CODE
- WEEK
- YEAR
- MAKER
- PART NO.

LOT NO		
YEAR(AA)	WEEK(BB)	PRODUCT CODE(C)
2012Y→12 2013Y→13 2014Y→14	1'st WEEK→01 2'nd WEEK→02 3'rd WWEK→03	A:KOREA PRODUCT C:CHINA(WENDENG) D:CHINA(DONGGUAN) E:CHINA(ZAOZHUANG)

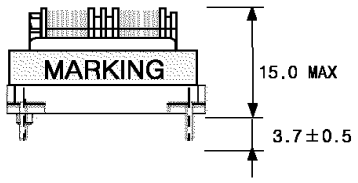

"not include solder fillet"

FRONT VIEW

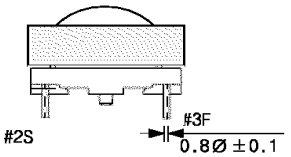

SIDE VIEW

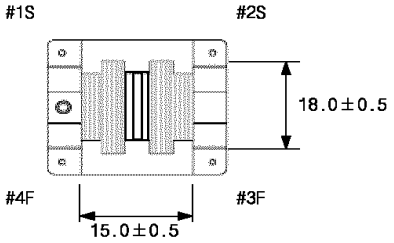

BOTTOM VIEW

CLOVER Hi-Tech CO., LTD.	DESIGN	CHECK	APPROVAL	PAGE
	朴秀晶 13.01.16 技術部	金基泰 13.01.16 技術部	劉成宰 13.01.16 技術部	4/22

CUSTOMER : POWERNET TECHNOLOGIES.

SPECIFICATIONS		DATE	2013.01.16
PART NAME	LINE FILTER	CODE NO	1420603

7. SCHEMATIC DIAGRAM

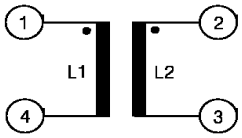

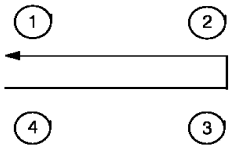

WINDING	BOTTOM VIEW	C.C.W
BOBBIN INSERT	SIDE INSERT	
N.C PIN	X	
REMOVE PIN	X	

8. WINDING SPECIFICATION

NO	TERMINAL NO		WINDING		
	START	FINISH	WIRE	TURNS	METHOD
L1	1	4	2UEW 0.45Ø	47±1 Ts	SOLENOID
L2	2	3	2UEW 0.45Ø	47±1 Ts	SOLENOID
WIRE SPECIFICATION			CONDUCTOR		
			WIRE	DIAMETER[mm]	TOLERANCE OF DIAMETER[mm]
			2UEW	0.45	±0.003

* REGARDING ABOVE TABLE STANDARD, THICKNESS OF WIRE MUST BE OVER SPECIFICATION.

CLOVER Hi-Tech CO., LTD.	DESIGN	CHECK	APPROVAL	PAGE
	朴秀晶 13.01.16 技術部	金基泰 13.01.16 技術部	劉成宰 13.01.16 技術部	5/22

CUSTOMER : POWERNET TECHNOLOGIES.

SPECIFICATIONS		DATE	2013.01.16
PART NAME	LINE FILTER	CODE NO	1420603

9. ELECTRICAL CHARACTERISTIC

NO	ITEM	TERMINAL	SPECIFICATION	REMARKS
1	INDUCTANCE	1 - 4	14.0 mH ±35%	HP-4284A at 100KHz,1V. (20℃±5℃)
		2 - 3	14.0 mH ±35%	
2	DIFFERENCE INDUCTANCE	|L1 - L2|	0.75 mH MAX.	
3	DC RESISTANCE	1 - 4	0.240 Ω MAX.	VP-2941A (20℃±5℃)
		2 - 3	0.240 Ω MAX.	
4	WITHSTANDING VOLTAGE	COIL - CORE	AC0.5kVrms, 1 MINUTE.	TOS-8850 CUT OFF CURRENT (5mA)
		COIL - COIL	AC0.5kVrms, 1 MINUTE.	
5	INSULATION RESISTANCE	COIL - CORE	DC500V, 100MΩ MIN.	TOS-8850
		COIL - COIL		
6	LAYER SHORT	AC 1.5KV, 60Hz		NO BREAK DOWN

* TEST CONDITION : TEMPERATURE 20℃±5℃, HUMIDITY 65%±20%

CLOVER Hi-Tech CO., LTD.	DESIGN	CHECK	APPROVAL	PAGE
	朴秀晶 13.01.16 技術部	金基泰 13.01.16 技術部	劉成宰 13.01.16 技術部	6/22

CUSTOMER : POWERNET TECHNOLOGIES.

SPECIFICATIONS		DATE	2013.01.16
PART NAME	LINE FILTER	CODE NO	1420603

13. CONSTRUCTION

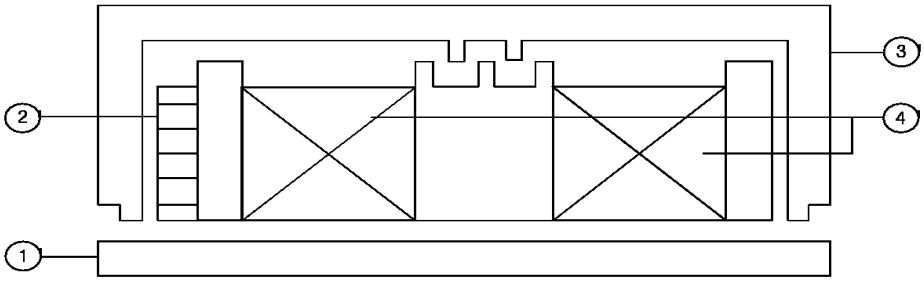

14. LIST OF MATERIAL

NO	COMPONENT	NAME OF MATERIAL	MANUFACTURER OF MATERIAL	UL FILE NO
1	CORE	SM-100, SQE 2020 HL10, SQE 2020 JSH10K, SQE 2020	SAMWHA ELECTRONICS CO.,LTD. Ruyuan Dongyangguang Magnetic Materials CO.,LTD. SHANGHAI JISHUN MAGNETIC MATERIAL CO.,LTD.	
2	BOBBIN	P.E.T. 94V-0 2 SECTION	E I DUPONT DE NEMOURS & CO INC. (FR-530)	E41938
3	BASE	PHENOLIC, 94V-0 H" TYPE 4PIN	MOMENTIVE SPECIALTY CHEMICALS GMBH. (PF 2736(a)(b)) CHANG CHUN PLASTICS CO.,LTD.(T375HF)	E61040 E59481
4	WIRE	2UEW 0.45Ø	DONGYANG ELECTRONICS IND CO.,LTD. CNI CABLE CO.,LTD. (ANSI TYPE(RATED 130℃)=MW28, MW75)	E102761 E210918
5	VARNISH	DVB-2085(*)	NOROO PAINT & COATINGS CO.,LTD.	E93947
6	SOLDER	BAR, WIRE	ALPHA METALS CO.,LTD.	
	FLUX	EF-9301 JS-7000S-2	ALPHA METALS CO.,LTD. KOKI KOREA CO.,LTD.	
7	MARKING	INK or LABEL	HITACHI CHEMICAL CO.,LTD.(BLACK)	

CLOVER Hi-Tech CO., LTD.	DESIGN	CHECK	APPROVAL	PAGE
	朴秀晶 13.01.16 技術部	金基泰 13.01.16 技術部	劉成宰 13.01.16 技術部	10/22

CUSTOMER : POWERNET TECHNOLOGIES.

SPECIFICATIONS		DATE	2013.01.16
PART NAME	LINE FILTER	CODE NO	1420603

※ CORE DIMENSION ※

SQE

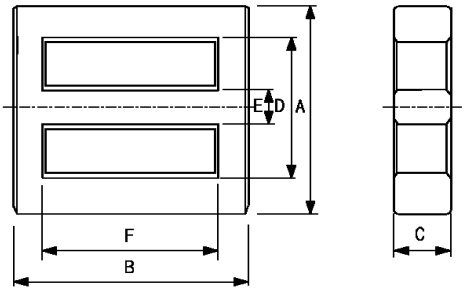

TYPE	DIMENSION(mm)						REMARKS
	A	B	C	D	E	F	
SQE 2020	20.1 ±0.4	20.1 ±0.4	5.4 ±0.2	15.9 MIN	4.0 ±0.2	15.9 MIN	SAMWHA
SQE 2020	20.1 ±0.4	20.1 ±0.4	5.4 ±0.2	15.9 MIN	4.0 ±0.2	15.9 MIN	DONGYANG GUANG
SQE 2020	20.1 ±0.4	20.1 ±0.4	5.4 ±0.2	15.9 MIN	4.0 ±0.2	15.9 MIN	JISHUN

	A	B	C	D	E	F
1	20.08	20.12	5.46	16.08	3.96	16.06
2	20.42	20.44	5.43	15.98	4.00	15.95
3	20.16	20.12	5.41	16.04	3.96	15.94
4	20.25	20.26	5.43	15.96	3.97	15.98
5	20.32	20.34	5.41	16.04	3.98	16.00

CLOVER Hi-Tech CO., LTD.	DESIGN	CHECK	APPROVAL	PAGE
	朴秀晶 13.01.16 技術部	金基泰 13.01.16 技術部	劉成宰 13.01.16 技術部	11/22

CUSTOMER : POWERNET TECHNOLOGIES.

SPECIFICATIONS		DATE	2013.01.16
PART NAME	LINE FILTER	CODE NO	1420603

※ BOBBIN(GEAR) DIMENSION ※

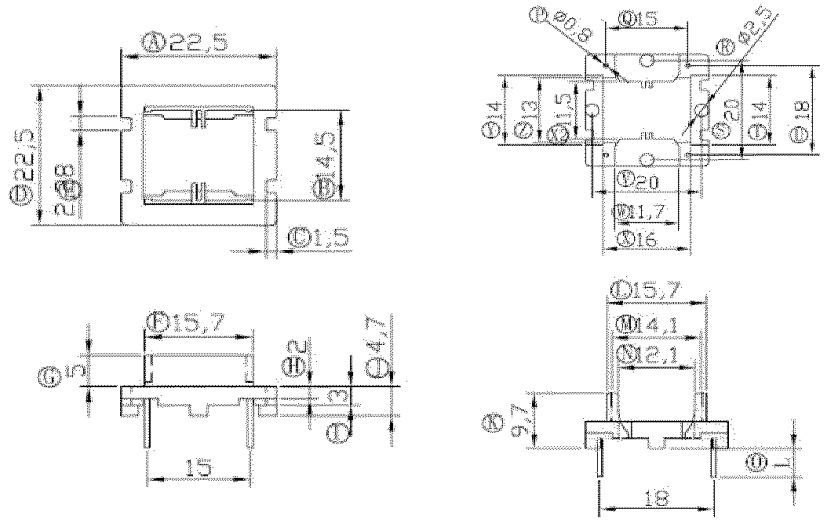

Q	R	S	T	U	V	W	X	Y	Z
15.0 ±0.2	2.5 ±0.1	20.0 ±0.3	14.0 ±0.2	18.0 ±0.3	20.0 ±0.1	11.7 ±0.2	16.0 ±0.2	14.0 ±0.2	13.0 ±0.2
15.05	2.52	20.04	14.03	18.00	20.02	11.73	15.97	14.02	13.03
15.06	2.53	20.07	14.04	18.01	20.03	11.76	15.99	14.02	13.05
15.04	2.53	20.01	14.03	17.99	20.00	11.72	16.00	14.00	13.01
15.07	2.51	20.05	14.05	17.99	19.99	11.71	15.99	14.03	13.06
15.05	2.52	20.08	14.04	18.00	20.20	11.73	15.98	14.03	13.06

	A	B	C	D	E	F	G	H	I	J	K	L	M	N	O	P
S.T.D	22.5 ±0.3	14.5 ±0.2	1.5 ±0.1	22.5 ±0.3	2.28 ±0.1	15.7 ±0.2	5.0 ±0.2	2.0 ±0.1	3.0 ±0.1	4.7 ±0.2	9.7 ±0.2	15.7 ±0.2	14.1 ±0.2	12.1 ±0.2	3.7 ±0.1	0.8 ±0.1
1	22.51	14.57	1.50	22.52	2.27	15.72	5.02	2.00	3.01	4.69	9.68	15.73	14.12	12.16	3.71	0.80
2	22.52	14.53	1.52	22.50	2.25	15.72	5.04	2.03	3.02	4.68	9.67	15.72	14.10	12.11	3.73	0.80
3	22.48	14.58	1.50	22.54	2.29	15.72	5.05	2.01	3.00	4.71	9.69	15.76	14.11	12.07	3.73	0.80
4	22.49	14.55	1.53	22.51	2.32	15.70	5.03	2.02	3.01	4.70	9.73	15.71	14.11	12.14	3.71	0.81
5	22.49	14.51	1.52	22.56	2.29	15.74	5.01	1.99	3.01	4.69	9.71	15.68	14.10	12.15	3.70	0.81

CLOVER Hi-Tech CO., LTD.	DESIGN	CHECK	APPROVAL	PAGE
	朴秀晶 13.01.16 技術部	金基泰 13.01.16 技術部	劉成宰 13.01.16 技術部	15/22

CUSTOMER : POWERNET TECHNOLOGIES.

SPECIFICATIONS		DATE	2013.01.16
PART NAME	LINE FILTER	CODE NO	1420603

※ BOBBIN(BASE) DIMENSION ※

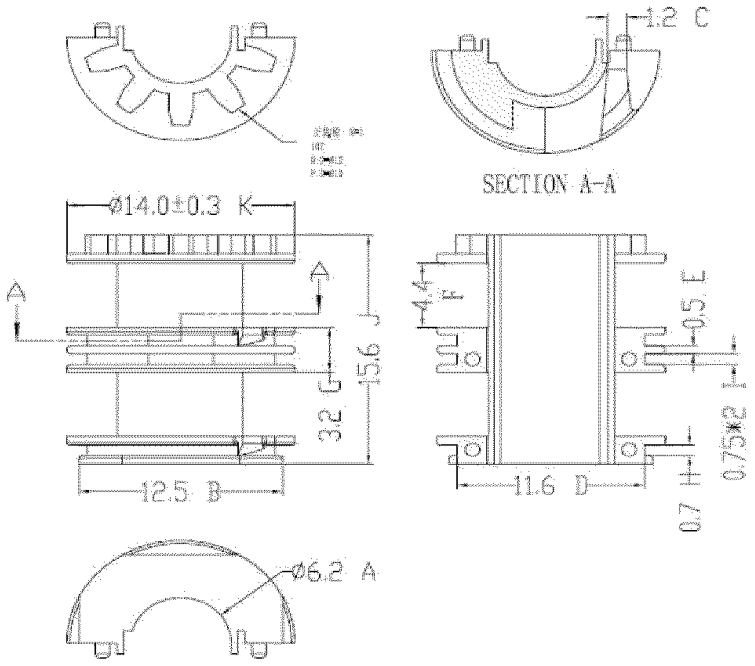

S.T.D	A	B	C	D	E	F	G	H	I	J	K
	6.2 ±0.2	12.5 ±0.2	1.2 ±0.1	11.6 ±0.2	0.5 ±0.1	4.4 ±0.2	3.2 ±0.1	0.7 ±0.1	0.75 ±0.1	15.6 ±0.2	14.0 ±0.2
1	6.25	12.53	1.27	11.66	0.53	4.41	3.20	0.71	0.74	15.64	14.07
2	6.21	12.51	1.24	11.62	0.51	4.43	3.21	0.71	0.74	15.62	14.09
3	6.23	12.55	1.21	11.62	0.51	4.45	3.20	0.72	0.75	15.62	14.05
4	6.20	12.54	1.22	11.67	0.52	4.46	3.23	0.71	0.77	15.65	14.03
5	6.24	12.53	1.26	11.63	0.52	4.42	3.20	0.70	0.76	15.62	14.07

CLOVER Hi-Tech CO., LTD.	DESIGN	CHECK	APPROVAL	PAGE
	朴秀晶 13.01.16 技術部	金基泰 13.01.16 技術部	劉成宰 13.01.16 技術部	16/22

TO:SAMSUNG TECHWIN CO., LTD

返 还 用
Please sign with company chop and return this copy to Shinano Kenshi

电动机规格书

(SUBMISSION OF SPECIFICATION)

提出日 2012 年 11 月 07 日

(SUBMITTING DATE) YEAR MONTH DATE

零件名 混合式步进电机

(PART NAME) HYBRID TYPE STEPPING MOTOR

贵公司型号

(CUSTOMER' S MODEL)

弊社型号 STH-36C1056

(SUPPLIER' S MODEL)

受领印栏 (RECEIPT STAMP)

年 月 日

东莞信浓马达有限公司 (DONGGUAN SHINANO MOTOR CO., LTD.)

营业确认 SALES CHECKED	品证确认 QA CHECKED	检 印 CHECKED	检 图 CHECKED	设计担当 DESIGNED
東莞信濃 2012-11-07 滝沢	東莞信濃 2012 11 8. 李峰	東莞信濃 2012-11-07 倪烽	東莞信濃 2012-11-07 芮俊	東莞信濃 2012-11-07 许元好

变更履历 (REVISIONS RECORD):

改 订 REV.	变更内容 REVISION DETAIL	年月日 DATE	确认 CHECKED	顾客确认 CUSTOMER CHECKED

绝缘构造材料表/INSULATION MATERIALS LIST

NO.	零件名称 及 构成材料 ARTICLE & COMPONENTS MATERIAL	型号 TYPE NO.	制造厂家 MANUFACTURER	UL认证号 UL FILE NO.	绝缘等级 INSULATION CLASS
①	漆包线/MAGNET WIRE (可焊锡)滑性变性聚酯铜线/(SELF BONDING) MODIFIED POLYESTER ENAMELLED COPPER WIRE 或者/OR (可焊锡)聚亚安酯铜线/(SELF BONDING) POLYURETHANE ENAMELLED COPPER WIRE	SPEWN, SPEWB1N, UEWN SF.BY, SF.BY-2, UEY, SF.B LOCK, SF.BLOCKBS SF.BY, FL.EILOCKY, SF.BLOCKBS, UEY MPEW/N, UEWN PEWN, UEWN UEWE, UEWF-E	信越电线有限公司/SHIN-ETSU ELECTRIC WIRE CO.,LTD. 东京特殊电线有限公司/TOTOKU ELECTRIC CO.,LTD 荣星电线工业股份有限公司/JUNG SHING WIRE CO.,LTD. 佛山市威奇电工材料有限公司 GUANGDONG WELLKEY ELECTRINC MATERIAL CO., LTD 东莞新隆电工材料有限公司 XIN LONG MAGNET WIRE CO.,LTD. 台一国际股份有限公司 TAI-I ELECTRIC WIRE & CABLE CO.,LTD.	E 94931 E 79029 E 174837 E 211138 E 171082 E 85640	B B B B B B
② ③	绝缘胶圈/SLOT INSULATOR POLYPLASTICS CRN7000 BLACK	CRN7000	WINTECH POLYMER.,LTD	E213445	B (94V-0)
④ ⑤	绝缘纸/绝缘胶盖 INSULATION SHEET/COIL COVER ZYTEL 103HS-L	ZYTEL 103 HS-L NC-010	E.I.DUPONT DE NEMOURS & CO.,INC.	E 41938	B (94V-2)
⑥	印刷电路板/PRINTED WIRING BOARD FR-4	4 W400 YS6 WS-1 103A	裕华线路板有限公司/YUE WAH CIRCUITS CO.,LTD. 运丰电路板有限公司 WELFARE PRINTED CIRCUITS BOARD CO.,LTD. 玉成电路有限公司/YUK SHING CIRCUITS CO.,LTD. 苏州王氏电路板有限公司/WANG'S CIRCUIT BOARD CO.,LTD. 红板有限公司/RED BOARD LTD	E 128280 E 93938 E 74210 E 214800 E 133472	(94V-0)
⑦	电机引线/LEAD WIRE UL1061 AWG28 300V 80℃ 耐燃P.V.C电线/HEAT RESISTANCE POLYVINYL CHLORIDE INSULATED WIRE	102621	乐庭电线工业/LTK WIRING CO.,LTD. 住友电气工业株式会社 SUMITOMO ELECTRIC INDUSTRIES, LTD.	E148000 E41105	
⑧	连接端子/CONNECTOR HOUSING 尼龙66/66 NYLON	51021-0400	MOLEX (株)/MOLEX JAPAN CO.,LTD.	E29179	(94V-0)

材质 MATERIAL	——						STH-36C1056
表面处理 FINISH	——	一	'12-11-06	—	00初版	芮俊	备注 NOTE
		改版 SYM.	年月日 DATE	变更票据号 REVISION NO.	变更事项 REVISIONS	设计 BY	

制图 DRAWN	设计 DESIGNED	检图 CHECKED	检印 CHECKED	比例 SCALE	FREE	品名 TITLE	绝缘构造图 MATERIALS LIST	三角法 THIRD ANGLE PROJECTION
东莞信浓 '12-11-06 许元好	东莞信浓 '12-11-06 芮俊	东莞信浓 2012-11-06 芮俊	东莞信浓 2012-11-06 祝海			图号 DWG. NO.	162-1067-00	
				东莞信浓马达有限公司 DONGGUAN SHINANO MOTOR CO.,LTD.		页 SHEET	1/2	

其它构造材料表/MATERIALS LIST EXCEPT INSULATION PARTS

NO.	零件名称 ARTICLE	构成材料 COMPONENTS MATERIAL
⑨	端子 CONNECTOR CONTACT	磷青铜 镀锡 PHOSPHOR BRONZE TIN-PLATED
⑩	挡圈 SPACER	A1050P(JIS H4000)
⑪⑫	端盖 END BELL	铝合金 ADC12 ALUMINIUM ALLOY
⑬	轴 SHAFT	不锈钢棒 SUS303 STAINLESS STEEL BAR
⑭	磁石 MAGNET	永久磁石材料 PERMANENT MAGNET MATERIAL
⑮	定子铁芯 STATOR CORE	无方向性电磁钢带 NON-ORIENTED MAGNETIC STEEL SHEET AND STRIP
⑯	转子铁芯 ROTOR CORE	无方向性电磁钢带 NON-ORIENTED MAGNETIC STEEL SHEET AND STRIP
⑰	滚动轴承 BALL BEARING	TYPE R166ZZ
⑱	转子涂料 COATING MATERIAL ON ROTOR	环氧树脂 EPOXY RESIN
⑲	螺丝 SCREW	炭素钢 或 合金钢 CARBON STEEL OR ALLOY STEEL WIRE ROD
⑳	波形垫片 WAVE WASHER	SAE1065 OR S65CM(JIS G 3311)ORSK5
㉑	平垫片 WASHER	烧入钢带 METAL STRIP
㉒	按印 STAMP	
㉓	焊料 SOLDER	Sn-3.0Ag-0.5Cu
㉔	带轮 PULLY	SMF4030

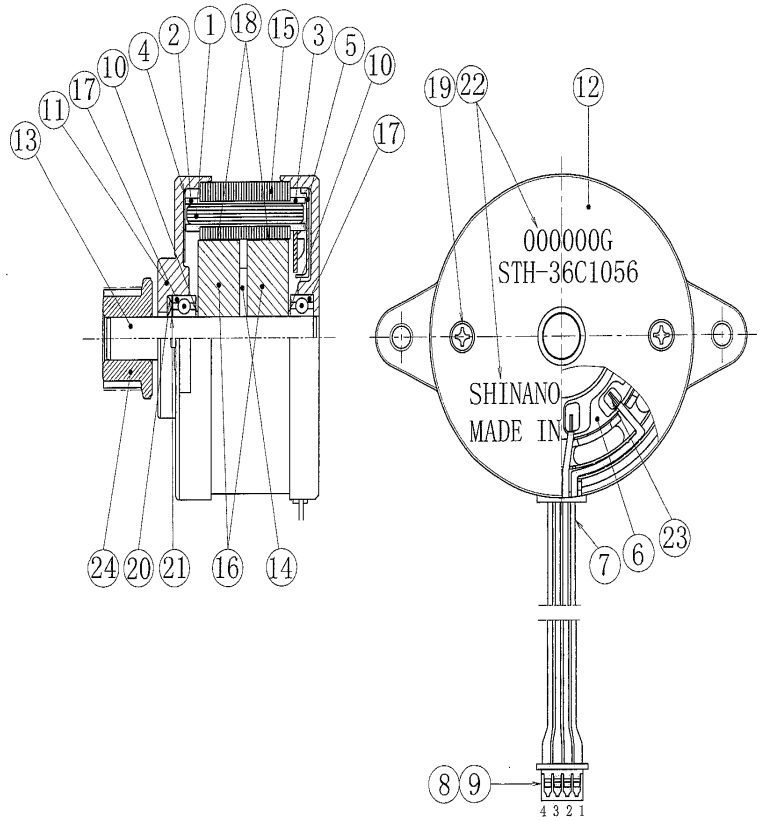

材质 MATERIAL	——							STH-36C1056
表面处理 FINISH	——		--	'12-11-06	——	00初版	芮俊	备注 NOTE
			改版 SYM	年月日 DATE	变更原图号 REVISION NO.	变更事项 REVISIONS	设计 BY	
制图 DRAWN	设计 DESIGNED	检图 CHECKED	检印 CHECKED	比例 SCALE	FREE	品名 TITLE	绝缘构造图 MATERIALS LIST	三角法 THIRD ANGLE PROJECTION
东莞信浓 '12-11-06 许元好	东莞信浓 '12-11-06 芮俊	东莞信浓 2012-11-06 芮俊	东莞信浓 2012-11-07 倪锋			图号 DWG. NO.	162-1067-00	
				东莞信浓马达有限公司 DONGGUAN SHINANO MOTOR CO.,LTD.			页 SHEET	2/2

电动机规格书
MOTOR SPECIFICATION

电动机型号 MOTOR MODEL STH-36C1056

顾客型号 CUSTOMER MODEL

1、适用范围 SCOPE

本规格书概括了混合式步进电动机STH-36C1056的基本要求
THIS SPECIFICATION COVERS THE GENERAL REQUIREMENTS FOR THE STEP MOTOR STH-36C1056 THAT CONSISTS OF BIPOLAR WINDING STATOR AND HYBRID MAGNET ROTOR

2、电气特性 ELECTRICAL CHARACTERISTICS

项目/ITEM	内容/SPECIFICATION	备注/DESCRIPTION
额定工作状态/DUTY	连续/CONTINUOUS	
额定电压/RATED VOLTAGE	4.6 V D.C	
额定电流/RATED CURRENT	0.4 A/相(PHASE)	
步进角/STEP ANGLE	0.9° (DEG)全步/FULL STEP	
相数/NUMBER OF PHASE	2相 双极的 2相励磁/2PHASE BIPOLAR 2PHASE EXCITING	
绝缘等级(UL)/INSULATION CLASS(UL)	UL B级/CLASS(绕组/COIL)	
卷线电阻/WINDING RESISTANCE	11.5Ω±10%	25° C
卷线电感/WINDING INDUCTANCE	9.0mH±20%	注释)1/NOTE)1
保持力矩/HOLDING TORQUE	78.5mN・m(800gf・cm)以上/MIN.	注释)2/NOTE)2
制动力矩/DETENT TORQUE	7.85mN・m(80gf・cm)参考值/REF.	
最大自起动频率/MAX STARTING PULSE RATE	1950PPS以上/MIN.	注释)3/NOTE)3
静止角度误差/POSITIONAL ACCURACY	±0.045° (deg)以下/MAX.	注释)4/NOTE)4
绝缘耐压/DIELECTRIC STRENGTH	500V A.C 1分钟/MINUTE 无异常/NO ABNORMAL	注释)5/NOTE)5
绝缘电阻/INSULATION RESISTANCE	100 MΩ 以上/MIN.	注释)6/NOTE)6
温度上升/TEMPERATURE RISE	80 K (80DEG)以下/MAX.	注释)7/NOTE)7

3、机械特性 MECHANICAL CHARACTERISTICS

项目/ITEM	内容/SPECIFICATION	备注/DESCRIPTION
机械尺寸/ MECHANICAL DEMENSION	根据电动机规格书113-4961-(3/3页)所示 ACCORDING TO SPECIFICATION 113-4961-(PAGE3/3)	
轴材料/SHAFT MATERIAL	SUS303	
轴承/BALL BEARING	单列滚珠轴承/SINGLE ROW BALL BEARING	
端盖材料/END BELL MATERIAL	铝合金/ALUMINIUM ALLOY	
质量/MASS	约90克/APPROXIMATELY 90g	
转子惯量 ROTOR INERTIA	约19.6g・cm²(20.0×10⁻³g・cm・s²) APPROXIMATELY 19.6g・cm²(20.0×10⁻³g・cm・s²)	

4、其他 ADDITIONAL

项目/ITEM	内容/SPECIFICATION	备注/DESCRIPTION
转动方向/DIRECTION OF ROTATION	按照表1的励磁顺序从安装面看顺时针方向 PHASE SEQUENCE TO PRODUCE CLOCKWISE ROTATION VIEWED FROM MOUNTING END IS AS TABLE 1	
电机引线型号/TYPE OF LEAD WIRE	UL1061 CSA AWM AWG28	
电机引线颜色/COLOR OF LEAD WIRE	按照表2所示/ACCORDING TO TABLE 2	
寿命/LIFE	5000小时以上/HOURS MIN.	注释)9/NOTE)9

本电机Pb、Cr(VI+)、Cd、Hg、PBB、PBDE 6种物质的含有量满足RoHS指令(2002/95/EC)的要求.
MATERIALS OF MOTOR CONTAIN SIX SUBSTANCES Pb Cr(VI+) Cd Hg PBB AND PBDE, THOSE CONTENTS COMPLY WITH THE RoHS INSTRUCTION

项目/ITEM	内容/SPECIFICATION	备注/DESCRIPTION
使用温度范围 OPERATION AMBIENT TEMPERATURE	-30℃～+60℃	
使用湿度范围 OPERATION AMBIENT HUMIDITY	20%RH ～ 90%RH	注释)9/NOTE)9
保存温度范围 STORAGE AMBIENT TEMPERATURE	-30℃～+80℃	
保存湿度范围 STORAGE AMBIENT HUMIDITY	15%RH ～ 95%RH	注释)9/NOTE)9

使用时的注意事项
CAUTION AND RECOMMENDATION

不可拎着电动机引线拿取电动机 电机引线出口处请不要作用外力
PLEASE DON'T HOLD MOTOR BY LEAD WIRES NO OUTSIDE FORCE ON THE EXIT OF LEAD WIRES

通电状态下不可插拔电动机插头
PLEASE DON'T PLUG OR UNPLUG THE MOTOR CONNECTOR WHILE POWER ON

请不要使电动机落地以及碰撞电动机
如有此类情况发生 即使当时电动机可以使用 但质量将不能得到保证
PLEASE DON'T DROP AND BUMP MOTOR AGAINST HARD MATERIAL MALFUNCTION MAY NOT BE OBSERVED AT EARLY STAGE AFTER SUCH SHOCK BUT IT MAY BE FOUND LATER THIS TYPE OF MISHANDLING VOIDS OUR WARRANTY

请顾客方对电动机在实际装配的状态进行确认 验证实际使用时的适用性
THE FUNCTION OR PERFORMANCE SHALL BE EVALUATED BY INSTALLING MOTOR TO APPLICATION THAT SHOULD BE CHECKED AT BUYER'S SIDE

电动机分解后不可再组装使用
PLEASE DON'T REUSE DISASSEMBLED MOTOR

在电动机的使用上 若产生有关专利问题 本公司不予保证 请贵公司特别注意
OUR CORPORATION WILL NOT BE RESPONSIBLE FOR ANY PATENT DISPUTE OR PROBLEM CAUSED BY ACTUAL APPLICATIONS

材质 MATERIAL	——						STH-36C1056
表面处理 FINISH	——	一	'12-09-20	----	00初版	黄俊	备注 NOTE
		改版 SYM	年月日 DATE	变更源图号 REVISION No.	变更事项 REVISIONS	设计 BY	

制图 DRAWN	设计 DESIGNED	检图 CHECKED	检印 CHECKED	比例 SCALE	FREE	品名 TITLE	电动机规格书 MOTOR SPECIFICATION	三角法 THIRD ANGLE PROJECTION
东莞信浓 '12-09-20 许元好	东莞信浓 '12-09-20 黄俊	东莞信浓 '12-09-20 黄俊	东莞信浓 '12-09-20 倪阵			图号 DWG.NO.	113-4961-00	
				东莞信浓马达有限公司 DONGGUAN SHINANO MOTOR CO.,LTD.		张 SHEET	1/3	

SKY

5、注释 NOTE

1.	在1kHz 1Vrms 条件下测定 MEASURED AT 1kHz 1Vrms
2.	在额定电流 2相励磁条件下进行测定 MEASURED AT RATED CURRENT AND 2PHASE EXCITING
3.	在无负载条件下测定 MEASURED AT NO LOAD
4.	不包括磁滞误差 2相励磁 EXCLUDING HYSTERESIS 2PHASE EXCITING
5.	在电机引线与铁芯间加50或60Hz交流电压1分钟无异常 并且泄漏电流在3mA以下 THERE SHOULD BE NO BREAK DOWN AT 50Hz&60Hz APPLIED FOR 1MINUTE BETWEEN MOTOR FRAME AND LEAD WIRES AND THE CUT OFF CURRENT IS 3mA MAX
6.	在电机引线与铁芯间加500V D.C电压 APPLY 500V D.C BETWEEN MOTOR FRAME AND LEAD WIRES
7.	使用图1所示的电路 2相励磁 0.4A/相(峰值) 1950PPS 无负荷 在安装150×150×t2放热铝板的条件下使用电阻法来测定 WITH TEST CIRCUIT OF FIG.1 MEASURED BY RESISTANCE METHOD WHEN MOTOR IS OPERATED AT 2PHASE EXCITING 0.4A/PHASE(PEAK)1950PPS NO LOAD WITH ALUMINIUM HEAT SINK 150×150×t2
8.	使用图1所示的电路 2相励磁 I=0.4A/相(峰值) 1950PPS轴承温度低于80℃条件下进行寿命试验后 在使用温度 湿度条件下 能满足项目2的电气特性 WITH TEST CIRCUIT OF FIG.1,2PHASE EXCITING I=0.4A/PHASE(PEAK) AT 1950PPS WHILE TEMPERATURE AT BALL BEARING SHOULD BE 80℃ MAX. TO DO LIFE TEST AFTER LIFE TEST IT SHOULD CONFORMS THE ELECTRICAL SPECIFICATION UNDER OPERATION AMBIENT
9.	表面应无结霜 NO CONDENSATION

图1 实验电路
FIG.1 TEST CIRCUIT

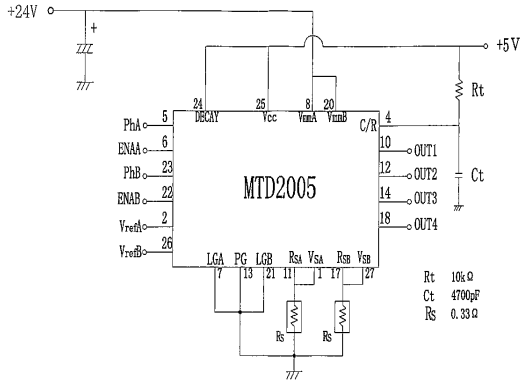

根据Vref调整电流值到0.4A/相(峰值)
I=0.4A/PHASE(PEAK) ADJUSTED BY Vref

【表1】 励磁顺序(2相励磁)
【TABLE1】 PHASE SEQUENCE(2PHASE EXCITING)

STEP	A	B	$\overline{A}$	$\overline{B}$
1	+	+	−	−
2	−	+	+	−
3	−	−	+	+
4	+	−	−	+
5	+	+	−	−

【表2】 电机引线颜色
【TABLE2】 COLOR OF LEAD WIRES

相 PHASE	A	B	$\overline{A}$	$\overline{B}$
颜色 COLOR	棕 BROWN	红 RED	橙 ORANGE	黄 YELLOW

发行 2017-09-21 DY

材质 MATERIAL	——						STH-36C1056
表面处理 FINISH	——	改版 SYM	年月日 DATE	变更课题号 REVISION NO.	00初版 变更事项 REVISIONS	设计 BY	备注 NOTE
		--	'12-09-20	——		两俊	

制图 DRAWN	设计 DESIGNED	检图 CHECKED	检印 CHECKED	比例 SCALE	FREE	品名 TITLE	电动机规格书（暂定） MOTOR SPECIFICATION (TENTATIVE)	三角法 THIRD ANGLE PROJECTION
东莞信浓 '12-09-20 许元灿	东莞信浓 '12-09-20 两俊	东莞信浓 '12-09-20 两俊	东莞信浓 '12-09-20 祝烨			图号 DWG.NO.	113-4961-00	

东莞信浓马达有限公司 DONGGUAN SHINANO MOTOR CO.,LTD. 页 SHEET 2/3

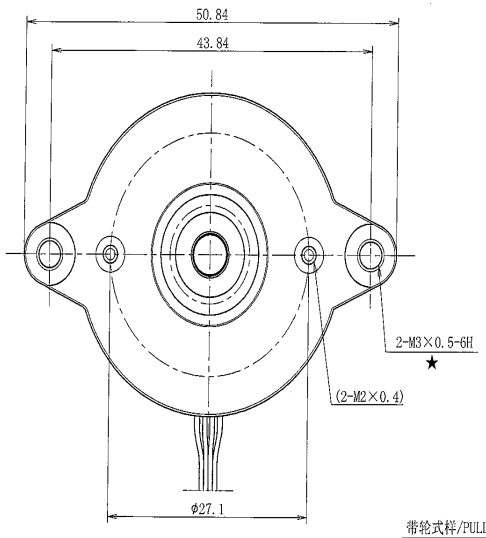

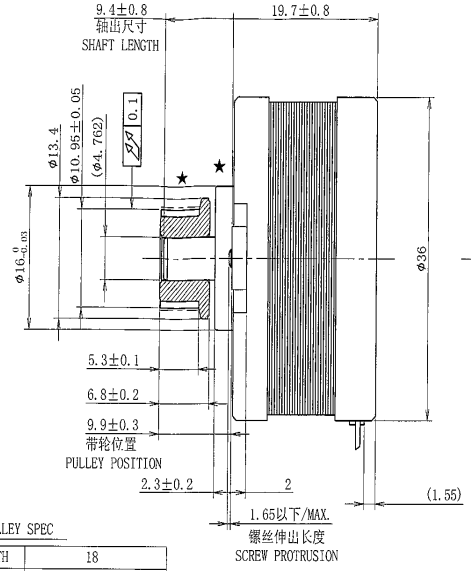

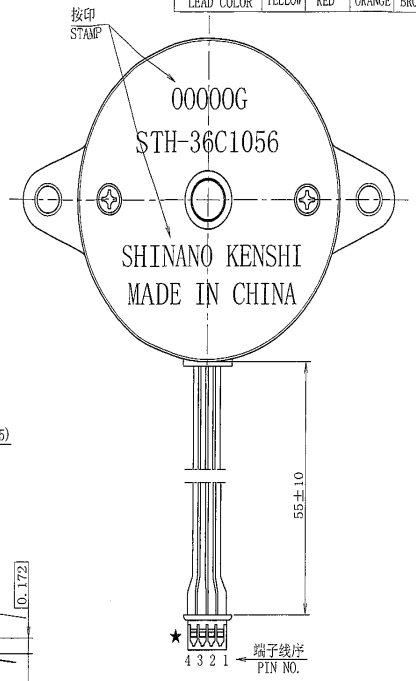

端子线序 PIN NUMBER	1	2	3	4
电机引线颜色 LEAD COLOR	黄 YELLOW	红 RED	橙 ORANGE	棕 BROWN

带轮式样/PULLEY SPEC

齿数	NUMBER OF TEETH	18
节圆直径 STANDARD PITCH CIRCLE DIAMETER		(φ11.46)
带轮外径	OUTSIDE DIAMETER	(φ10.95)
齿形	TOOTH TYPE	S2M
节距	TOOTH PITCH	2
材质	MATERIAL	SMF4030
表面处理	POSTPROCESSING	水蒸气处理 STEAM PROCESSING

注 NOTE)
带轮的空转力矩:0.147N・m(1.5kgf・cm)以上
THE LOOSENING TORQUE OF PULLEY:0.147N・m(1.5kgf・cm)MIN.

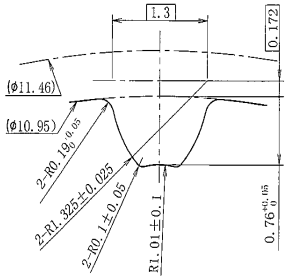

齿形详细图(20:1)
TOOTH DETAIL DWG

【 电机连接件 MOTOR SIDE CONNECTOR】

制造商:MOLEX(株)
MAKER MOLEX
插接件 : 51021-0400 颜色:白然色
HOUSING COLOR:NATURAL
端子 : 50059-8000 OR 8100
CONTACT

【电机接线图 WIRING DIAGRAM】

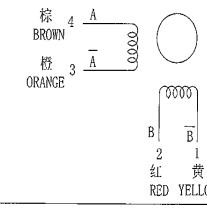

【按印内容 STAMP DISCRIPTION】

【批号构成/LOT NO. CONSTRUCTION】

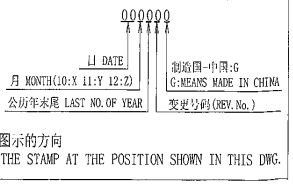

按印按图示的方向
PAINT THE STAMP AT THE POSITION SHOWN IN THIS DWG.

一般公差 TOLERANCES (EXCEPT AS NOTES)	±0.3/±2°	★印部是顾客使用部(安装部 动力传输部 电源部) PORTIONS MARKED BY ★ ARE USED BY CUSTOMER(MOUNTING・POWER TRANSMISSION・POWER SUPPLY)					STH-36C1056
材 质 MATERIAL	——						
表面处理 FINISH	——	变版 SYM	年 月 日 DATE	变理要因号 REVISION NO.	变 更 事 项 REVISIONS	设计 BY	备 注 NOTE
		—	'12-09-20	——	00初版	黄俊	

制 图 DRAWN	设 计 DESIGNED	检 图 CHECKED	检 印 CHECKED	比例 SCALE	2:1	品 名 TITLE	电动机规格书(暂定) MOTOR SPECIFICATION (TENTATIVE)	三角法 THIRD ANGLE PROJECTION
东莞信浓 '12-09-20 许元辰	东莞信浓 '12-09-20 黄俊	东莞信浓 '12-09-20 黄俊	东莞信浓 '12-09-20 绿修			图 号 DWG. NO.	113-4961-00	

东莞信浓马达有限公司 DONGGUAN SHINANO MOTOR CO.,LTD. 页 SHEET 3/3

QC PROCESS FLOW CHART

SHINANOKENSHI CO.L'

QUALITY ASSURANCE DEPT.

PROCESS FLOW MATERIAL	PROCESS FLOW	PROCESS No	PROCESS NAME	MACHINERY	MANAGE STANDARD	MANAGE ITEM	MEASUREMENT	SAMPLING	OPERATOR	NOTE
PURCHASED	1	1	INCOMING CHECK		PART DESIGN	SIZE/APPEARANCE,ETC	CALIPER/VISBLE	INCOMING CHECK RULE	INSPECTOR	INSPECTION RECORD
COIL STEEL	2	2	STATOR PRESS	PRESS MACHINE	OPERATION DIRECT SHEET	COIL DEPTH	CALIPER	ALL	OPERATOR	CHECK SHEET
						VIBRATION	GAUGE/MICROMETER	TYPE CHANGE, 1/SHIFT	〃	P CHART
						DIAMETER	SPECIAL MACHINE	〃	〃	
						RIVET INTENSION	TATION GAUGE	〃	〃	
PAINT	3	3	PAINT	PAINT MACHINE	OPERATION DIRECT SHEET	DIAMETER	GAUGE	ALL	OPERATOR	P CHART
						APPEARANCE	VISIBLE	〃	〃	
	4	4	ABRASION	MULLER	OPERATION DIRECT SHEET	VIBRATION	SPECIAL MACHINE	TYPE CHANGE, 1/SHIFT	〃	CHECK SHEET
	5	5	WASH		OPERATION DIRECT SHEET	WASH POSITION	VISIBLE	1 PCS/1 BOX	OPERATOR	
ANTIRUST	6	6	ANTIRUST		OPERATION DIRECT SHEET	SPREAD POSITION			OPERATOR	
INSULATOR WIRE	7	7	MAIN WINDING	WINDING MACHINE	OPERATION DIRECT SHEET	WIRE TYPE/DIAMETER	LABEL CHECK	BEFORE OPERATING, BOBBIN CHANGE	LEADER	CHECK SHEET
						WINDING POSITION	VISIBLE	BEFORE OPERATING	〃	
						RESISTANCE	RESISTANCE METER	〃	〃	
PCB ASS'Y	8	8	PCB ASS'Y ASSEMBLY		OPERATION DIRECT SHEET	WIRE ELICIT POSITION	VISIBLE	ALL	OPERATOR	P CHART
						PCB FIX POSITION	〃	〃	〃	
SOLDERING	9	9	DOWN-LEAD PREPARATION SOLDERING		OPERATION DIRECT SHEET	SEARING-IRON TEMPERATURE	SEARING-IRON THERMOMETER	TYPE CHANGE, BEFORE OPERATING	OPERATOR	CHECK SHEET
						PREPARATION SOLDERING POSITION	VISIBLE	ALL	〃	P CHART
SOLDERING	10	10	DOWN-LEAD SOLDERING	SEARING-IRON	OPERATION DIRECT SHEET	SEARING-IRON TEMPERATURE	SEARING-IRON THERMOMETER	TYPE CHANGE, BEFORE OPERATING	LEADER	CHECK SHEET
						PREPARATION SOLDERING POSITION	VISIBLE	ALL	OPERATOR	P CHART
	11	11	CONDUCTIVITY WAVE INSPECTION	INSULATION TESTER	OPERATION DIRECT SHEET	INSULATION/ RESISTANCE	INSULATION TESTER	ALL	OPERATOR	CHECK SHEET
						SHORT CIRCUIT CHECK	〃	〃	〃	P CHART
STEEL	12	12	ROTOR SHAFT	SPECIAL MACHINE	OPERATION DIRECT SHEET	MANUFACTURE SIZE	CALIPER/MICROMETER	TYPE CHANGE, 1/SHIFT	OPERATOR	CHECK SHEET
				SPECIAL MACHINE		SHAFT DIAMETER	CAL MICROMETER	TYPE CHANGE, 5/SHIFT	〃	P CHART
						VIBRATION	DIAL GAUGE	〃	〃	
	13	13	CUTTING	CUTTING MACHINE	OPERATION DIRECT SHEET	MANUFACTURE SIZE	MICROMETER	TYPE CHANGE	OPERATOR	CHECK SHEET
COIL STEEL	14	14	ROTOR PRESS	PRESS MACHINE	OPERATION DIRECT SHEET	COIL DEPTH	CALIPER	TYPE CHANGE, 1/SHIFT	OPERATOR	CHECK SHEET
						VIBRATION	SPECIAL MACHINE	TYPE CHANGE, 1/SHIFT	〃	P CHART
						DIAMETER	GAUGE/MICROMETER	〃	〃	
						RIVET INTENSION	TATION GAUGE	〃	〃	
MAGNET	15	15	PRESS	SPECIAL MACHINE	OPERATION DIRECT SHEET	PRESSURE	PRESSURE METER	ALL	OPERATOR	CHECK SHEET
						SHAFT LENGTH	CALIPER	TYPE CHANGE, 1/H	〃	P CHART
						COIL DEPTH	〃	〃	〃	
PAINT	16	16	EXTERIOR COAT	SPECIAL PAINT MACHINE	OPERATION DIRECT SHEET	EXTERIOR COAT POSITION	VISIBLE	ALL	OPERATOR	
	17	17	TORREFACTION	OVEN	OPERATION DIRECT SHEET	TEMPERATURE/TIME	THERMOMETER/ CALCULAGRAPH	TYPE CHANGE	OPERATOR	CHECK SHEET
						SCLEROUS POSITION	KNIFE	1/SHIFT	〃	
	18	18	OUTSIDE AROUND STIMULATE	SLEEVE SHARPENER	OPERATION DIRECT SHEET	MANUFACTURE SIZE	METER OF MACHINE	ALL	OPERATOR	CHECK SHEET
						HARSH GRADE	VISIBLE	1/H	〃	
GREASE	19	19	DAUBING GREASE		OPERATION DIRECT SHEET	DAUBING POSITION	VISIBLE	ALL	OPERATOR	
BRACKET (MACHINING) THRUST WASHE ADHESIVE GREASE BALL BEARING SCREW BOLT WAVE WASHE	20	20	ASSEMBLY	ELECTRIC TURNSCREW	OPERATION DIRECT SHEET	SCREW TORQUE	TORQUE METER	BEFORE OPERATING	LEADER	CHECK SHEET
				MAGNETIZE PWOER		MAGNETIZE VOLTAGE	VOLTAGE METER	〃	〃	P CHART
				MAGNETIZE MACHINE		MAGNETIZE ORGAN		〃	〃	
						SOUND (BEFORE AND AFTER MAGNETIZE)	AUDIBLE	ALL	OPERATOR	
						PRESSURE	TACTILITY	〃	〃	
						SHAFT LENGTH	SHAFT LENGTH METE	〃	〃	
	21	21	ELECTRICITY CHARACTERISTIC CHECK 1	SHORT INSPECTOR INSULATION TESTER	OPERATION DIRECT SHEET	SHORT CIRCULT CHECK INSULATION	TESTER	ALL	OPERATOR	CHECK SHEET/P CHART
	22	22	DETENT TORQUE INSPECTION		OPERATION DIRECT SHEET	DETENT TORQUE	TORQUE METER	ALL	OPERATOR	CHECK SHEET/P CHART
	23	23	ELECTRICITY CHARACTERISTIC CHECK 2	ELECTRICITY CHARACTERISTIC INSPECTION	OPERATION DIRECT SHEET	ELECTRICITY CHARACTERISTIC	TESTER	ALL	OPERATOR	P CHART
PULLEY	24	24	PRESS PULLEY	PRESS MACHINE	OPERATION DIRECT SHEET	PRESSURE	PRESSURE METER	BEFORE OPERATING	LEADER	CHECK SHEET
				PRESS FIXTURE		PULLEY HEIGHT	HEIGHT METER	ALL	OPERATOR	P CHART
	25	25	IMPRESS LABLE	PRINTER	LABEL LIST	LABEL POSITION/STAT	VISIBLE	ALL	OPERATOR	LABEL LIST
	26	26	APPEARANCE CHECK		OPERATION DIRECT SHEET	APPEARANCE	VISIBLE	ALL	OPERATOR	P CHART
	27	27	PACKAGING		BOND DIRECTION	BOND STATE	VISIBLE	ALL	OPERATOR	
	28	28	MOTOR CHECK	MOTOR INSPECTION	INSPRCTION RECORD	ELECTRICITY CHARACTERISTIC	TESTER	SHIPPING CHECK RULE	INSPECTOR	INSPECTION RECORD
						APPEARANCE	VISIBLE/CALIPER,ETC	〃	〃	
	29	29	STORE		OPERATION DIRECT SHEET	LABEL/QUANTITY CONFIRM	VISIBLE	ALL	OPERATOR	

APPROVED	CHECKED	PREPARED	REV.	DATE	NOTES	MODEL
来宗信義 2012/11/08 宇加玲	来宗信義 2012/11/08 宇加玲	来宗信義 2012/11/08 宇加玲	0	2012.11.8	THE FIRST EDITION	STH-36C1056

产品出货包装规格书

(Delivery Packing Specification Instruction)

分发(Distribution)	S1 CP CF QA ES SKJ

页(Page): 1/2

管理号码(Managing No.) HKK-STH36C1056GA-00

型 号 (Model)	STH-36C1056GA	顾客零件号 Customer's Part No.		包装形式 Packing	瓦楞纸箱 Corrugated paper box
		一箱总数量 Quantity Per Box	30台×4层=120台 (30pcs×4Layer=120pcs)		
顾客(Customer)	SAMSUNG TECHWIN CO LTD	一箱总重量 Mass Per Box	约 12 千克(About 12 Kg)		

包装规格 Packing specification

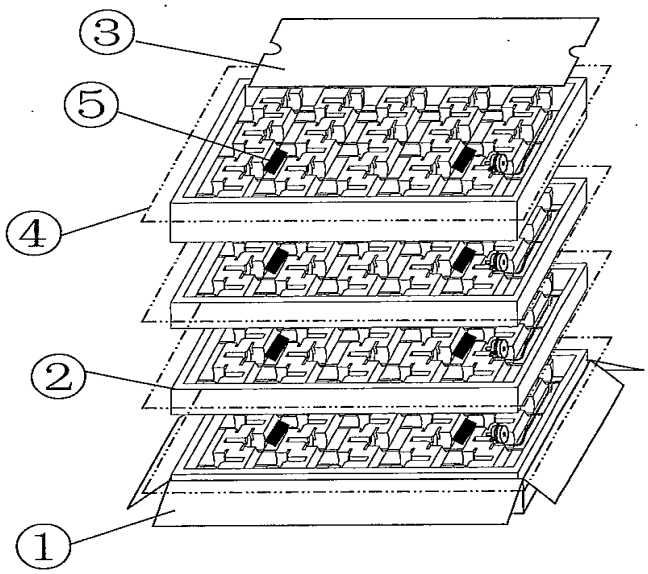

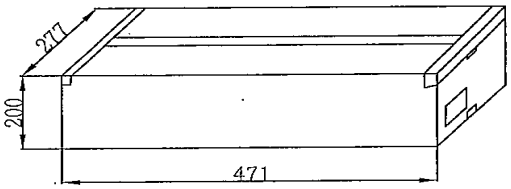

包装材料 Packing material

序号 No.	名 称 Item	材 料 Material	规 格 Specification	数 量 Quantity	编 号 Spec. No.	备 注 Remark
1	外箱(Outside box)	瓦楞纸板(Corrugated cardboard)	471×277×200	1	AW0085	Y39
2	内箱(Inside box)	发泡箱(Epispastic polystyrene box)	SST36C0030GA	4	NP0274	---
3	纸板(Cardboard)	瓦楞纸板(Corrugated cardboard)	430×235	1	GW0019	---
4	塑料片(Plastic sheet)	塑料片(Plastic sheet)	1200×1000×0.01	4	PS0008	---
5	干燥剂(Desiccant)	硅胶(Silica Gel)	5g	8	ZG0005	---

履历 No.	编制日期 Edit date	编制 Prepared by	批准 Approved by	更改内容 Modification	批准 Approved by	审核 Checked by	编制 Prepared by
00	12/09/22	李阳	魏然	———	東莞信濃 2012-9-22 马保京	東莞信濃 2012-9-22 马保京	東莞信濃 2012-09-22 李阳

东莞信浓马达有限公司/合肥信浓马达有限公司 DONG GUAN SHINANO MOTOR CO., LTD./HE FEI SHINANO MOTOR CO., LTD	格式编号 Format No.	SKYJ407001-3

产品出货包装规格书
(Delivery Packing Specification Instruction)

型 号 Model	STH-36C1056GA	顾客零件号 Customer's Part No.		包装形式 Packing	卡 板 Pallet
		一卡板总数量 Quantity Per Pallet	8箱×4层=32箱(8Box×4Layer=32Box)		
顾客(Customer)	SAMSUNG TECHWIN CO LTD	一卡板总重量 Mass Per Pallet	约 404 千克(About 404 Kg)		

包装规格 Packing specification

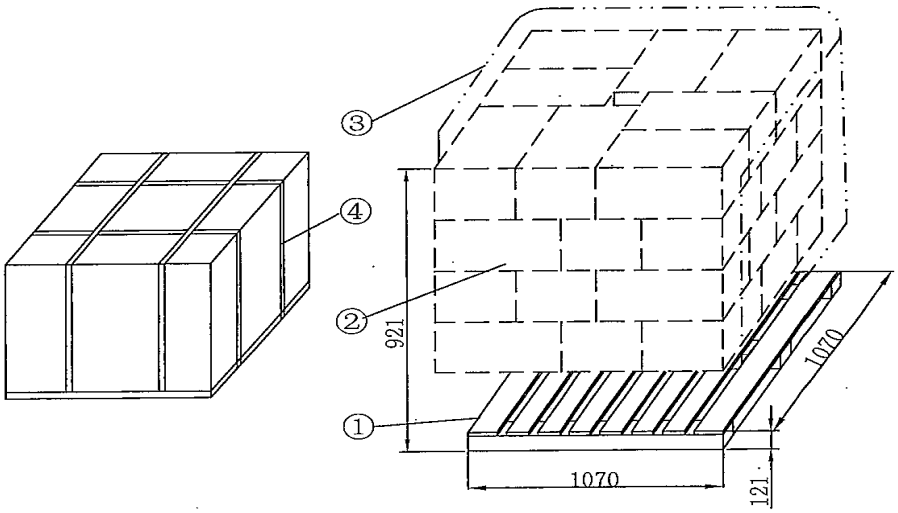

包装材料 Packing material

序号 No.	名 称 Item	材 料 Material	规 格 Specification	数 量 Quantity	编 号 Spec. No.	备 注 Remark
1	卡板(Pallet)	合板(Plywood)	1070×1070×121	1	KU0002	②
2	外箱(Outside box)	瓦楞纸板(Corrugated cardboard)	471×277×200	32	AW0085	Y39
3	塑料薄膜(Plastic film)	塑料薄膜(Plastic film)	———	1	———	———
4	打包带(Strip)	打包带(Strip)	———	4	———	———

东莞信浓马达有限公司/合肥信浓马达有限公司 DONG GUAN SHINANO MOTOR CO.,LTD./HE FEI SHINANO MOTOR CO.,LTD.	格 式 编 号 Format No.	SKYJ407001-3

TO: SAMSUNG TECHWIN CO LTD

返 还 用
Please sign with company chop and return this copy to Shinano Kenshi

电动机规格书

(SUBMISSION OF SPECIFICATION)

提出日 2014 年 10 月 16 日
(SUBMITTING DATE) YEAR MONTH DATE

零件名 混合式步进电机
(PART NAME) HYBRID TYPE STEPPING MOTOR

贵公司型号 STH-36C1078
(CUSTOMER' S MODEL)

弊社型号 STH-36C1078
(SUPPLIER' S MODEL)

受领印栏 (RECEIPT STAMP)

年 月 日

东莞信浓马达有限公司 (DONGGUAN SHINANO MOTOR CO., LTD.)

营业确认 SALES CHECKED	品证确认 QA CHECKED	检 印 CHECKED	检 图 CHECKED	设计担当 DESIGNED
2014-10-16 滝沢	東莞信濃 2014-10-17 李加珍	東莞信濃 2014-10-16 倪烽	東莞信濃 2014-10-16 倪烽	東莞信濃 2014-10-16 胡金平

变更履历 (REVISIONS RECORD) :

改 订 REV.	变更内容 REVISION DETAIL	年月日 DATE	确认 CHECKED	顾客确认 CUSTOMER CHECKED

电动机规格书
MOTOR SPECIFICATION

电动机型号 MOTOR MODEL STH-36C1078

顾客型号 CUSTOMER MODEL

1、适用范围 SCOPE

本规格书概括了混合式步进电动机STH-36C1078的基本要求
THIS SPECIFICATION COVERS THE GENERAL REQUIREMENTS FOR THE STEP MOTOR STH-36C1078 THAT CONSISTS OF BIPOLAR WINDING STATOR AND HYBRID MAGNET ROTOR

2、电气特性 ELECTRICAL CHARACTERISTICS

项目/ITEM	内容/SPECIFICATION	备注/DESCRIPTION
额定工作状态/DUTY	连续/CONTINUOUS	
驱动电压/DRIVE VOLTAGE	12 V D.C	
额定电流/RATED CURRENT	0.6 A/相(PHASE)	
步进角/STEP ANGLE	0.9° (DEG)全步/FULL STEP	
相数/NUMBER OF PHASE	2相 双极的 2相励磁/2PHASE BIPOLAR 2PHASE EXCITING	
绝缘等级(UL)/INSULATION CLASS(UL)	UL B级/CLASS(绕组/COIL)	
卷线电阻/WINDING RESISTANCE	6.9Ω±10%	25° C
卷线电感/WINDING INDUCTANCE	5.35mH±20%	注释)1/NOTE)1
保持力矩/HOLDING TORQUE	85.3mN·m(870gf·cm)以上/MIN.	注释)2/NOTE)2
制动力矩/DETENT TORQUE	11.7mN·m(120gf·cm)以下/MAX.	
最大自起动频率/MAX STARTING PULSE RATE	1800PPS以上/MIN.	注释)3/NOTE)3
静止角度误差/POSITIONAL ACCURACY	±0.045° (deg)以下/MAX.	注释)4/NOTE)4
绝缘耐压/DIELECTRIC STRENGTH	500V A.C 1分钟/MINUTE 无异常/NO ABNORMAL	注释)5/NOTE)5
绝缘电阻/INSULATION RESISTANCE	100 MΩ 以上/MIN.	注释)6/NOTE)6
温度上升/TEMPERATURE RISE	80 K (80DEG)以下/MAX.	注释)7/NOTE)7

3、机械特性 MECHANICAL CHARACTERISTICS

项目/ITEM	内容/SPECIFICATION	备注/DESCRIPTION
机械尺寸/ MECHANICAL DEMENSION	根据电动机规格书113-5460-(3/3页)所示 ACCORDING TO SPECIFICATION 113-5460-(PAGE3/3)	
轴材料/SHAFT MATERIAL	SUS303	
轴承/BALL BEARING	单列滚珠轴承/SINGLE ROW BALL BEARING	
端盖材料/END BELL MATERIAL	铝合金/ALUMINIUM ALLOY	
质量/MASS	约90克/APPROXIMATELY 90g	
转子惯量 ROTOR INERTIA	约19.6g·cm²(20.0×10⁻³g·cm·s²) APPROXIMATELY 19.6g·cm²(20.0×10⁻³g·cm·s²)	

4、其他 ADDITIONAL

项目/ITEM	内容/SPECIFICATION	备注/DESCRIPTION
转动方向/DIRECTION OF ROTATION	按照表1的励磁顺序从安装面看顺时针方向 PHASE SEQUENCE TO PRODUCE CLOCKWISE ROTATION VIEWED FROM MOUNTING END IS AS TABLE 1	
电机引线型号/TYPE OF LEAD WIRE	UL1061 CSA AWM AWG28	
电机引线颜色/COLOR OF LEAD WIRE	按照表2所示/ACCORDING TO TABLE 2	
寿命/LIFE	5000小时以上/HOURS MIN.	注释)8/NOTE)8

本电机Pb、Cr(VI+)、Cd、Hg、PBB、PBDE 6种物质的含有量满足RoHS指令(2011/65/EU)的要求.
MATERIALS OF MOTOR CONTAIN SIX SUBSTANCES Pb Cr(VI+) Cd Hg PBB AND PBDE, THOSE CONTENTS COMPLY WITH THE RoHS INSTRUCTION

项目/ITEM	内容/SPECIFICATION	备注/DESCRIPTION
使用温度范围 OPERATION AMBIENT TEMPERATURE	-30℃～+60℃	
使用湿度范围 OPERATION AMBIENT HUMIDITY	20%RH ～ 90%RH	注释)9/NOTE)9
保存温度范围 STORAGE AMBIENT TEMPERATURE	-30℃～+80℃	
保存湿度范围 STORAGE AMBIENT HUMIDITY	15%RH ～ 95%RH	注释)9/NOTE)9

使用时的注意事项 CAUTION AND RECOMMENDATION	不可拎着电动机引线拿取电动机 电机引线出口处请不要作用外力 PLEASE DON'T HOLD MOTOR BY LEAD WIRES NO OUTSIDE FORCE ON THE EXIT OF LEAD WIRES
	通电状态下不可插拔电动机插头 PLEASE DON'T PLUG OR UNPLUG THE MOTOR CONNECTOR WHILE POWER ON
	请不要使电动机落地以及碰撞电动机 如有此类情况发生 即使当时电动机可以使用 但质量将不能得到保证 PLEASE DON'T DROP AND BUMP MOTOR AGAINST HARD MATERIAL MALFUNCTION MAY NOT BE OBSERVED AT EARLY STAGE AFTER SUCH SHOCK BUT IT MAY BE FOUND LATER THIS TYPE OF MISHANDLING VOIDS OUR WARRANTY
	请顾客方对电动机在实际装配的状态进行确认 验证实际使用时的适用性 THE FUNCTION OR PERFORMANCE SHALL BE EVALUATED BY INSTALLING MOTOR TO APPLICATION THAT SHOULD BE CHECKED AT BUYER'S SIDE
	电动机分解后不可再组装使用 PLEASE DON'T REUSE DISASSEMBLED MOTOR
	在电动机的使用上 若产生有关专利问题 本公司不予保证 请贵公司特别注意 OUR CORPORATION WILL NOT BE RESPONSIBLE FOR ANY PATENT DISPUTE OR PROBLEM CAUSED BY ACTUAL APPLICATIONS

发行 14-10-16 DY

SKY

材质 MATERIAL	——						STH-36C1078
表面处理 FINISH	——	一	'14-10-10	——	00初版	胡金平	
		改版 SYM	年月日 DATE	变更数据号 REVISION NO.	变更事项 REVISIONS	设计 BY	备注 NOTE

制图 DRAWN	设计 DESIGNED	检图 CHECKED	检印 CHECKED	比例 SCALE	FREE	品名 TITLE	电动机规格书 MOTOR SPECIFICATION	三角法 THIRD ANGLE PROJECTION
东莞信浓 '14-10-10 胡金平	东莞信浓 '14-10-10 胡金平	东莞信浓 '14-10-10 倪烁	东莞信浓 '14-10-10 倪烁			图号 DWG. NO.	113-5460-00	
东莞信浓马达有限公司 DONGGUAN SHINANO MOTOR CO., LTD.						页 SHEET	1/3	

CONFIDENTIAL

5、注释 NOTE

1.	在1kHz 1Vrms 条件下测定 MEASURED AT 1kHz 1Vrms
2.	在额定电流 2相励磁条件下进行测定 MEASURED AT RATED CURRENT AND 2PHASE EXCITING
3.	在无负载条件下测定 MEASURED AT NO LOAD
4.	不包括磁滞误差 2相励磁 EXCLUDING HYSTERESIS 2PHASE EXCITING
5.	在电机引线与铁芯间加50或60Hz交流电压1分钟无异常 并且泄漏电流在3mA以下 THERE SHOULD BE NO BREAK DOWN AT 50Hz&60Hz APPLIED FOR 1MINUTE BETWEEN MOTOR FRAME AND LEAD WIRES AND THE CUT OFF CURRENT IS 3mA MAX
6.	在电机引线与铁芯间加500V D.C电压 APPLY 500V D.C BETWEEN MOTOR FRAME AND LEAD WIRES
7.	使用图1所示的电路 2相励磁 0.6A/相(峰值) 1800PPS 无负荷 在安装150×150×t2放热铝板的条件下使用电阻法来测定 WITH TEST CIRCUIT OF FIG.1 MEASURED BY RESISTANCE METHOD WHEN MOTOR IS OPERATED AT 2PHASE EXCITING 0.6A/PHASE(PEAK)1800PPS NO LOAD WITH ALUMINIUM HEAT SINK 150×150×t2
8.	使用图1所示的电路 2相励磁 I=0.6A/相(峰值) 1800PPS轴承温度在80℃以下 条件下进行寿命试验后 在使用温度 湿度条件下 能满足项目2的电气特性 WITH TEST CIRCUIT OF FIG.1 2PHASE EXCITING I=0.6A/PHASE(PEAK) AT 1800PPS BEARING TEMPERATURE MUST BE 80℃ MAX. TO DO LIFE TEST AFTER LIFE TEST IT SHOULD CONFORMS THE ELECTRICAL SPECIFICATION UNDER OPERATION AMBIENT
9.	表面应无结霜 NO CONDENSATION

【表1】 励磁顺序(2相励磁)
【TABLE1】 PHASE SEQUENCE(2PHASE EXCITING)

STEP	A	B	$\bar{A}$	$\bar{B}$
1	+	+	−	−
2	−	+	+	−
3	−	−	+	+
4	+	−	−	+
5	+	+	−	−

【表2】 电机引线颜色
【TABLE2】 COLOR OF LEAD WIRES

相 PHASE	A	B	$\bar{A}$	$\bar{B}$
颜色 COLOR	棕 BROWN	红 RED	橙 ORANGE	黄 YELLOW

图1 实验电路
FIG.1 TEST CIRCUIT

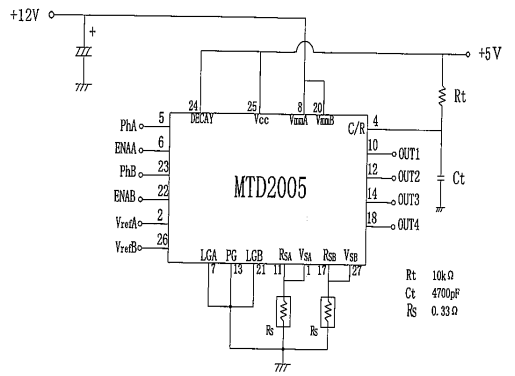

根据Vref调整电流值到0.6A/相(峰值)
I=0.6A/PHASE(PEAK) ADJUSTED BY Vref

发行 14-10-16 DY

材质 MATERIAL	——						STH-36C1078
表面处理 FINISH	——	— 版次 STD	'14-10-10 年月日 DATE	—— 变更编号 REVISION No.	00初版 变更事项 REVISIONS	胡金平 设计 BY	备注 NOTE
制图 DRAWN	设计 DESIGNED	检图 CHECKED	检印 CHECKED	比例 SCALE	FREE	品名 TITLE	电动机规格书 MOTOR SPECIFICATION
东莞信浓 '14-10-10 胡金平	东莞信浓 '14-10-10 胡金平	东莞信浓 '14-10-10 倪烽	东莞信浓 '14-10-10 倪烽			图号 DWG. NO.	113-5460-00
				东莞信浓马达有限公司 DONGGUAN SHINANO MOTOR CO.,LTD.		页 SHEET	2/3

三角法 THIRD ANGLE PROJECTION

CONFIDENTIAL

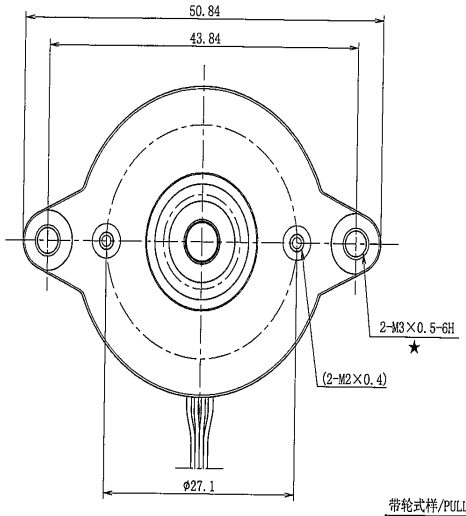

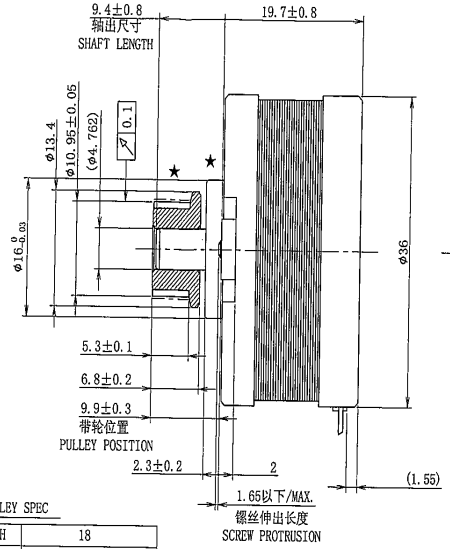

端子线序 PIN NUMBER	1	2	3	4
电机引线颜色 LEAD COLOR	黄 YELLOW	红 RED	橙 ORANGE	棕 BROWN

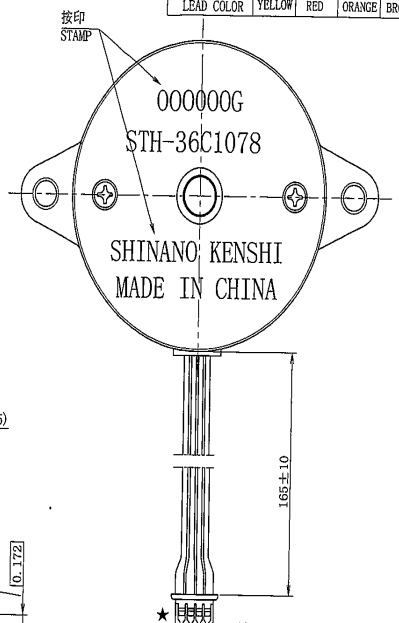

带轮式样/PULLEY SPEC

齿数	NUMBER OF TEETH	18
节圆直径 STANDARD PITCH CIRCLE DIAMETER		(φ11.46)
带轮外径	OUTSIDE DIAMETER	(φ10.95)
齿形	TOOTH TYPE	S2M
节距	TOOTH PITCH	2
材质	MATERIAL	SMF4030
表面处理	POSTPROCESSING	水蒸气处理 STEAM PROCESSING

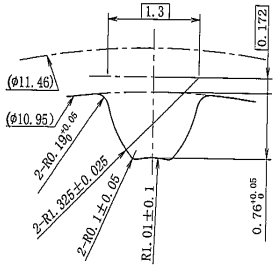

齿形详细图(20:1)
TOOTH DETAIL DWG

注 NOTE)
带轮的空转力矩:0.147N・m(1.5kgf・cm)以上
THE LOOSENING TORQUE OF PULLEY:0.147N・m(1.5kgf・cm)MIN.

【 电机连接件 MOTOR SIDE CONNECTOR】

制造商:MOLEX(株)
MAKER MOLEX
插接件 : 51021-0400 颜色:自然色
HOUSING COLOR:NATURAL
端子 : 50059-8000 OR 8100
CONTACT

【电机接线图 WIRING DIAGRAM】

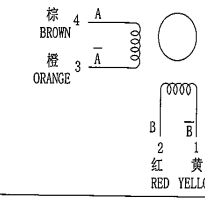

【按印内容 STAMP DISCRIPTION】

【批号构成/LOT NO. CONSTRUCTION】

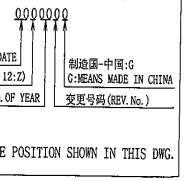

按印按图示的方向
PAINT THE STAMP AT THE POSITION SHOWN IN THIS DWG.

一般公差 TOLERANCES (EXCEPT AS NOTES)	±0.3/±2°						
材质 MATERIAL	——						STH-36C1078
表面处理 FINISH	——	—	'14-10-10	——	00初版	胡金平	
		改版 SYM	年月日 DATE	变更原因号 REVISION NO.	变更事项 REVISIONS	设计 BY	备注 NOTE

制图 DRAWN	设计 DESIGNED	检图 CHECKED	检印 CHECKED	比例 SCALE	2:1	品名 TITLE	电动机规格书 MOTOR SPECIFICATION	三角法 THIRD ANGLE PROJECTION
东莞信浓 '14-10-10 胡金平	东莞信浓 '14-10-10 胡金平	东莞信浓 '14-10-10 倪炜	东莞信浓 '14-10-10 倪炜			图号 DWG.NO.	113-5460-00	
				东莞信浓马达有限公司 DONGGUAN SHINANO MOTOR CO.,LTD.		页 SHEET	3/3	

★印部是顾客使用部(安装部 动力传输部 电源部)
PORTIONS MARKED BY ★ ARE USED BY CUSTOMER(MOUNTING・POWER TRANSMISSION・POWER SUPPLY)

发行 14-10-16 DY SKY

CONFIDENTIAL

产品出货包装规格书

(Delivery Packing Specification Instruction)

分发(Distribution)	S1 CP CF QA ES SKJ

页(Page): 1/2

管理号码(Managing No.)	HKK-STH36C1078GA-00

型 号 (Model)	STH-36C1078GA	顾客零件号 Customer's Part No.		包装形式 Packing	瓦楞纸箱 Corrugated paper box
		一箱总数量 Quantity Per Box	30台×4层=120台 (30pcs×4Layer=120pcs)		
顾客(Customer)	SAMSUNG TECHWIN CO LTD	一箱总重量 Mass Per Box	约 12 千克(About 12 Kg)		

包装规格 Packing specification

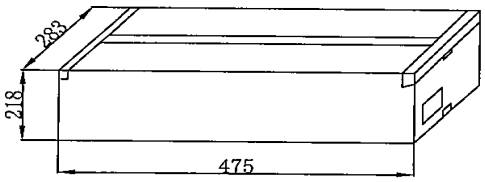

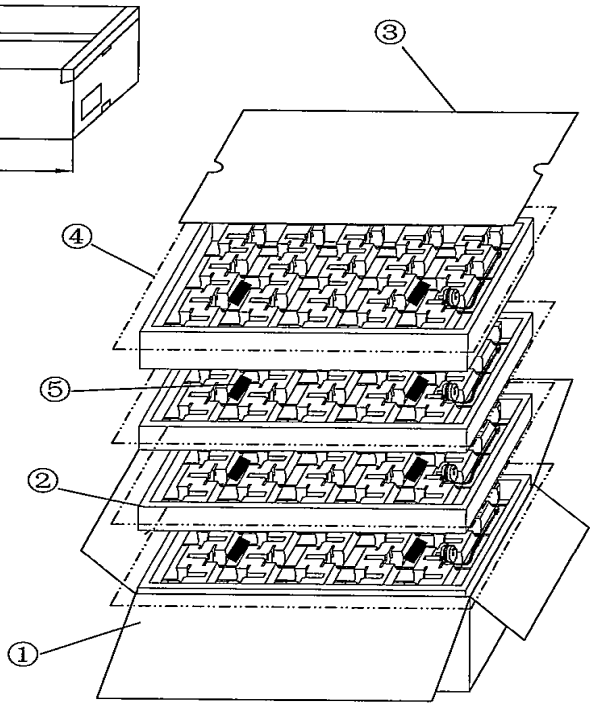

包装材料 Packing material

序号 No.	名 称 Item	材 料 Material	规 格 Specification	数 量 Quantity	编 号 Spec. No.	备 注 Remark
1	外箱(Outside box)	瓦楞纸板(Corrugated cardboard)	475×283×218	1	AW0085	Y39
2	内箱(Inside box)	发泡箱(Epispastic polystyrene box)	SST36C0030GA	4	NP0274	---
3	纸板(Cardboard)	瓦楞纸板(Corrugated cardboard)	430×235	1	GW0019	---
4	塑料片(Plastic sheet)	塑料片(Plastic sheet)	1200×1000×0.01	4	PS0008	---
5	干燥剂(Desiccant)	硅胶(Silica Gel)	5g	8	ZG0005	---

履历 No.	编制日期 Edit date	编制 Prepared by	批准 Approved by	更改内容 Modification	批准 Approved by	审核 Checked by	编制 Prepared by
00	14/10/11	韩培华	魏然	———			

东莞信浓马达有限公司/合肥信浓马达有限公司 DONG GUAN SHINANO MOTOR CO.,LTD./HE FEI SHINANO MOTOR CO.,LTD	格式编号 Format No.	SKYJ407001-3

产品出货包装规格书
(Delivery Packing Specification Instruction)

型 号 Model	STH-36C1078GA	顾客零件号 Customer's Part No.		包装形式 Packing	卡 板 Pallet
		一卡板总数量 Quantity Per Pallet	8箱×4层=32箱(8Box×4Layer=32Box)		
顾客(Customer)	SAMSUNG TECHWIN CO LTD	一卡板总重量 Mass Per Pallet	约 404 千克(About 404 Kg)		

包装规格 Packing specification

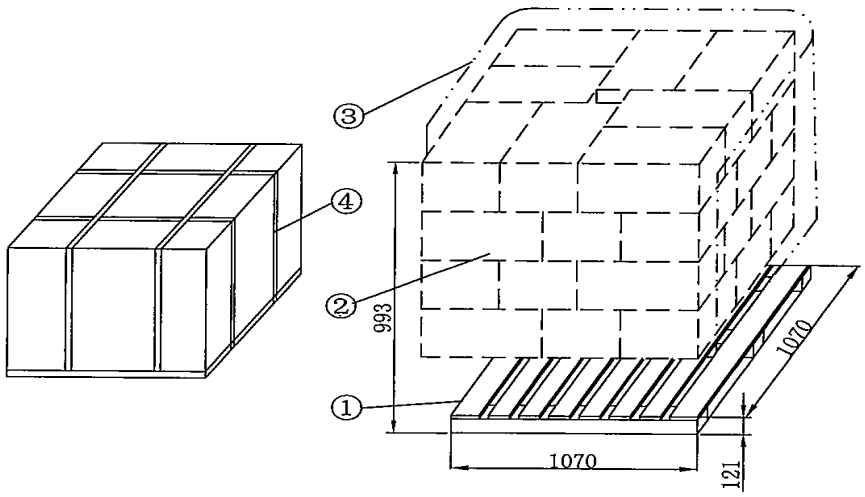

包装材料 Packing material

序号 No.	名 称 Item	材 料 Material	规 格 Specification	数 量 Quantity	编 号 Spec. No.	备 注 Remark
1	卡板(Pallet)	合板(Plywood)	1070×1070×121	1	KU0002	②
2	外箱(Outside box)	瓦楞纸板(Corrugated cardboard)	475×283×218	32	AW0085	Y39
3	塑料薄膜(Plastic film)	塑料薄膜(Plastic film)	———	1	———	———
4	打包带(Strip)	打包带(Strip)	———	4	———	———

东莞信浓马达有限公司/合肥信浓马达有限公司 DONG GUAN SHINANO MOTOR CO.,LTD./HE FEI SHINANO MOTOR CO.,LTD	格 式 编 号 Format No.	SKYJ407001-3

出荷検査基準書/出荷検査成績書
(SHIPPING INSPECTION SPECIFICATION/SHIPPING INSPECTION RECORD)

東莞信濃馬達有限公司
シナノケンシ(株)中国工場 品質保証部

出荷検査基準書 NO.	CQACH-14S120
顧客名 CUSTOMER	SAMSUNG TECHWIN CO LTD
顧客部番 CUSTOMER'S PARTS NO	~~~~
機種名 MODEL	STH-36C1078GA
新規作成日 FIRST ISSUE	2014.10.15

SKJ	SKY		
合議 (CONFER)	承認 (APPROVED)	確認 (CHECKED)	作成 (PREPARED)
	東莞信濃 2014/10/15 李加玲	東莞信濃 2014/10/15 張 帆	東莞信濃 2014/10/15 袁利星

LOT NO.	
LOT SIZE.	
S 出荷日(SHIP.DATE)	
K 出荷台数(SHIP.SIZE)	
Y 出荷NO.(SHIP.NO.)	
S 出荷日(SHIP.DATE)	
K 出荷台数(SHIP.SIZE)	
J 出荷NO.(SHIP.NO.)	

検査年月日(INSP.DATE)		
室温(TEMP.) ℃	気圧(ATM.) hpa	湿度(HUMID.) %
承認 (APPROVED)	検査 (CHECKED)	判定 (JUDGE.)
氏名(NAME)	氏名(NAME)	
番号(I.D.NO.)	番号(I.D.NO.)	

1. 特性・寸法検査(PERFORMANCES・DIMENSIONS INSP.)

検査項目 (INSP.ITEM)		規格値(SPEC.) 下限(Lower)	上限(Upper)	単位 (Unit)	方法 (METHOD)	測定値(MEASUREMENTS) No.1	No.2	No.3	No.4	No.5	判定(JUDGE.) OK/NG	備考(測定条件等) (REMARK)
卷线电阻	A相	6.21	7.59	Ω	电阻计							温度25℃
	B相	6.21	7.59	Ω								
卷线电感	A相	4.28	6.42	mH	LCR表							1kHz/1Vrms
	B相	4.28	6.42	mH								
保持力矩		85.3	-	mN·m	力矩计							0.6A／相、2相励磁
制动力矩		-	11.7	mN·m	力矩计							
最大自起动频率		1800	-	pps	专用检查器							无负荷
绝缘电阻		100 以上		MΩ	绝缘耐压计							DC500V
绝缘耐压		无异常		-	绝缘耐压计							AC500V/1分/3mA
回转方向		CW		-	目视							从安装面侧见顺时针
轴振		-	0.10	mm	千分表							
轴出位置		8.6	10.2	mm	高度计							
带轮位置		9.6	10.2	mm								
Φ部外径		15.97	16.00	mm	千分尺							
螺纹孔		2-M3×0.5-6H(OK/NG)		mm	螺纹规							
口出线长度		155	175	mm	直尺							

2. 外観検査(APPEARANCE)

検査項目(INSP.ITEM)	確認内容(CHECKED)	方法(METHOD)	n	c
铭牌	位置.方向.内容.污迹.破损.批号等	目视		
螺丝	欠品.异品.浮起.打花.打歪等	目视		
安装面	毛刺.刻痕.变形.无漏加工螺孔.螺纹等	目视		
出力轴/带轮	毛刺.刻痕.变形.生锈.带轮压入状态等	目视		
口出线	松脱.破损.压伤.漏芯线.污迹等	目视		
推力间隙	推力间隙大.小.移动无滞感等	手感		
回转状态	挡.回转重.角度大.等	手感		

COMMENT

REV. NO.	改訂日 (DATE)	改訂内容(REVISIONS) ☞ (仕様書図番・変更票番号・指示書番号等も記入)	作成 (PREPARED)	承認 (APPROVED)
00	2014.10.15	新規作成	袁利星	张 帆

QC PROCESS FLOW CHART

SHINANOKENSIH CO.LTD

QUALITY ASSURANCE DEPT.

MATERIAL	PROCESS FLOW	PROCESS No	PROCESS NAME	MACHINERY	MANAGE STANDARD	MANAGE ITEM	MEASUREMENT	SAMPLING	OPERATOR	NOTE
PURCHASED	1	1	INCOMING CHECK		PART DESIGN	SIZE/APPEARANCE,ETC	CALIPER/VISBLE	INCOMING CHECK RUL	INSPECTOR	INSPECTION RECORD
COIL STEEL	2	2	STATOR PRESS	PRESS MACHINE	OPERATION DIRECT SHEET	COIL DEPTH	CALIPER	ALL	OPERATOR	CHECK SHEET
						VIBRATION	GAUGE/MICROMETER	TYPE CHANGE, 1/SHIFT	〃	P CHART
						DIAMETER	SPECIAL MACHINE	〃	〃	
						RIVET INTENSION	TATION GAUGE	〃	〃	
PAINT	3	3	PAINT	PAINT MACHINE	OPERATION DIRECT SHEET	DIAMETER	GAUGE	ALL	OPERATOR	P CHART
						APPEARANCE	VISIBLE	〃	〃	
	4	4	ABRASION	MULLER	OPERATION DIRECT SHEET	VIBRATION	SPECIAL MACHINE	TYPE CHANGE, 1/SHIFT	〃	CHECK SHEET
	5	5	WASH		OPERATION DIRECT SHEET	WASH POSITION	VISIBLE	1 PCS/1 BOX	OPERATOR	
ANTIRUST	6	6	ANTIRUST		OPERATION DIRECT SHEET	SPREAD POSITION			OPERATOR	
INSULATOR WIRE	7	7	MAIN WINDING	WINDING MACHINE	OPERATION DIRECT SHEET	WIRE TYPE/DIAMETER	LABEL CHECK	BEFORE OPERATING, BOBBIN CHANGE	LEADER	CHECK SHEET
						WINDING POSITION	VISIBLE	BEFORE OPERATING	〃	
						RESISTANCE	RESISTANCE METER	〃	〃	
PCB ASS'Y	8	8	PCB ASS'Y ASSEMBLY		OPERATION DIRECT SHEET	WIRE ELICIT POSITION	VISIBLE	ALL	OPERATOR	P CHART
						PCB FIX POSITION	〃	〃	〃	
SOLDERING	9	9	DOWN-LEAD PREPARATION SOLDERING		OPERATION DIRECT SHEET	SEARING-IRON TEMPERATURE	SEARING-IRON THERMOMETER	TYPE CHANGE, BEFORE OPERATING	OPERATOR	CHECK SHEET
						PREPARATION SOLDERING POSITION	VISIBLE	ALL	〃	P CHART
SOLDERING	10	10	DOWN-LEAD SOLDERING	SEARING-IRON	OPERATION DIRECT SHEET	SEARING-IRON TEMPERATURE	SEARING-IRON THERMOMETER	TYPE CHANGE, BEFORE OPERATING	LEADER	CHECK SHEET
						PREPARATION SOLDERING POSITION	VISIBLE	ALL	OPERATOR	P CHART
	11	11	CONDUCTIVITY WAVE INSPECTION	INSULATION TESTER	OPERATION DIRECT SHEET	INSULATION/ RESISTANCE	INSULATION TESTER	ALL	OPERATOR	CHECK SHEET
						SHORT CIRCUIT CHEC	〃	〃	〃	P CHART
STEEL	12	12	ROTOR SHAFT	SPECIAL MACHINE	OPERATION DIRECT SHEET	MANUFACTURE SIZE	CALIPER/MICROMETER	TYPE CHANGE, 1/SHIFT	OPERATOR	CHECK SHEET
				SPECIAL MACHINE		SHAFT DIAMETER	CAL MICROMETER	TYPE CHANGE, 5/SHIFT	〃	P CHART
						VIBRATION	DIAL GAUGE	〃	〃	
	13	13	CUTTING	CUTTING MACHINE	OPERATION DIRECT SHEET	MANUFACTURE SIZE	MICROMETER	TYPE CHANGE	OPERATOR	CHECK SHEET
COIL STEEL	14	14	ROTOR PRESS	PRESS MACHINE	OPERATION DIRECT SHEET	COIL DEPTH	CALIPER	TYPE CHANGE, 1/SHIFT	OPERATOR	CHECK SHEET
						VIBRATION	SPECIAL MACHINE	TYPE CHANGE, 1/SHIFT	〃	P CHART
						DIAMETER	GAUGE/MICROMETER	〃	〃	
						RIVET INTENSION	TATION GAUGE	〃	〃	
MAGNET	15	15	PRESS	SPECIAL MACHINE	OPERATION DIRECT SHEET	PRESSURE	PRESSURE METER	ALL	OPERATOR	CHECK SHEET
						SHAFT LENGTH	CALIPER	TYPE CHANGE, 1/H	〃	P CHART
						COIL DEPTH	〃	〃	〃	
PAINT	16	16	EXTERIOR COAT	SPECIAL PAINT MACHINE	OPERATION DIRECT SHEET	EXTERIOR COAT POSITION	VISIBLE	ALL	OPERATOR	
	17	17	TORREFACTION	OVEN	OPERATION DIRECT SHEET	TEMPERATURE/TIME	THERMOMETER/ CALCULAGRAPH	TYPE CHANGE	OPERATOR	CHECK SHEET
						SCLEROUS POSITION	KNIFE	1/SHIFT	〃	
	18	18	OUTSIDE AROUND STIMULATE	SLEEVE SHARPENER	OPERATION DIRECT SHEET	MANUFACTURE SIZE	METER OF MACHINE	ALL	OPERATOR	CHECK SHEET
						HARSH GRADE	VISIBLE	1/H	〃	
GREASE	19	19	DAUBING GREASE		OPERATION DIRECT SHEET	DAUBING POSITION	VISIBLE	ALL	OPERATOR	
BRACKET (MACHINING) THRUST WASHE ADHESIVE GREASE BALL BEARING SCREW BOLT WAVE WASHE	20	20	ASSEMBLY	ELECTRIC TURNSCREW MAGNETIZE PWOER MAGNETIZE MACHINE	OPERATION DIRECT SHEET	SCREW TORQUE	TORQUE METER	BEFORE OPERATING	LEADER	CHECK SHEET
						MAGNETIZE VOLTAGE	VOLTAGE METER	〃	〃	P CHART
						MAGNETIZE ORGAN		〃	〃	
						SOUND (BEFORE AND AFTER MAGNETIZE)	AUDIBLE	ALL	OPERATOR	
						PRESSURE	TACTILITY	〃	〃	
						SHAFT LENGTH	SHAFT LENGTH METE	〃	〃	
	21	21	ELECTRICITY CHARACTERISTIC CHECK 1	SHORT INSPECTOR INSULATION TESTER	OPERATION DIRECT SHEET	SHORT CIRCUIT CHECK INSULATION	TESTER	ALL	OPERATOR	CHECK SHEET/P CHART
	22	22	ELECTRICITY CHARACTERISTIC CHECK 2	ELECTRICITY CHARACTERISTIC INSPECTION	OPERATION DIRECT SHEET	ELECTRICITY CHARACTERISTIC	TESTER	ALL	OPERATOR	P CHART
PULLEY	23	23	PRESS PULLEY	PRESS MACHINE	OPERATION DIRECT SHEET	PRESSURE	PRESSURE METER	BEFORE OPERATING	LEADER	CHECK SHEET
				PRESS FIXTURE		PULLEY HEIGHT	HEIGHT METER	ALL	OPERATOR	P CHART
	24	24	IMPRESS LABLE	PRINTER	LABEL LIST	LABEL POSITION/STAT	VISIBLE	ALL	OPERATOR	LABEL LIST
	25	25	APPEARANCE CHECK		OPERATION DIRECT SHEET	APPEARANCE	VISIBLE	ALL	OPERATOR	P CHART
	26	26	PACKAGING		BOND DIRECTION	BOND STATE	VISIBLE	ALL	OPERATOR	
	27	27	MOTOR CHECK	MOTOR INSPECTION	INSPRCTION RECORD	ELECTRICITY CHARACTERISTIC	TESTER	SHIPPING CHECK RULE	INSPECTOR	INSPECTION RECORD
						APPEARANCE	VISIBLE/CALIPER,ETC	〃	〃	
	28	28	STORE		OPERATION DIRECT SHEET	LABEL/QUANTITY CONFIRM	VISIBLE	ALL	OPERATOR	

APPROVED	CHECKED	PREPARED	REV.	DATE	NOTES	MODEL
2014/10/14	2014/10/14	2014/10/14	INTERIM	2014.10.14	THE FIRST EDITION	STH-36C1078

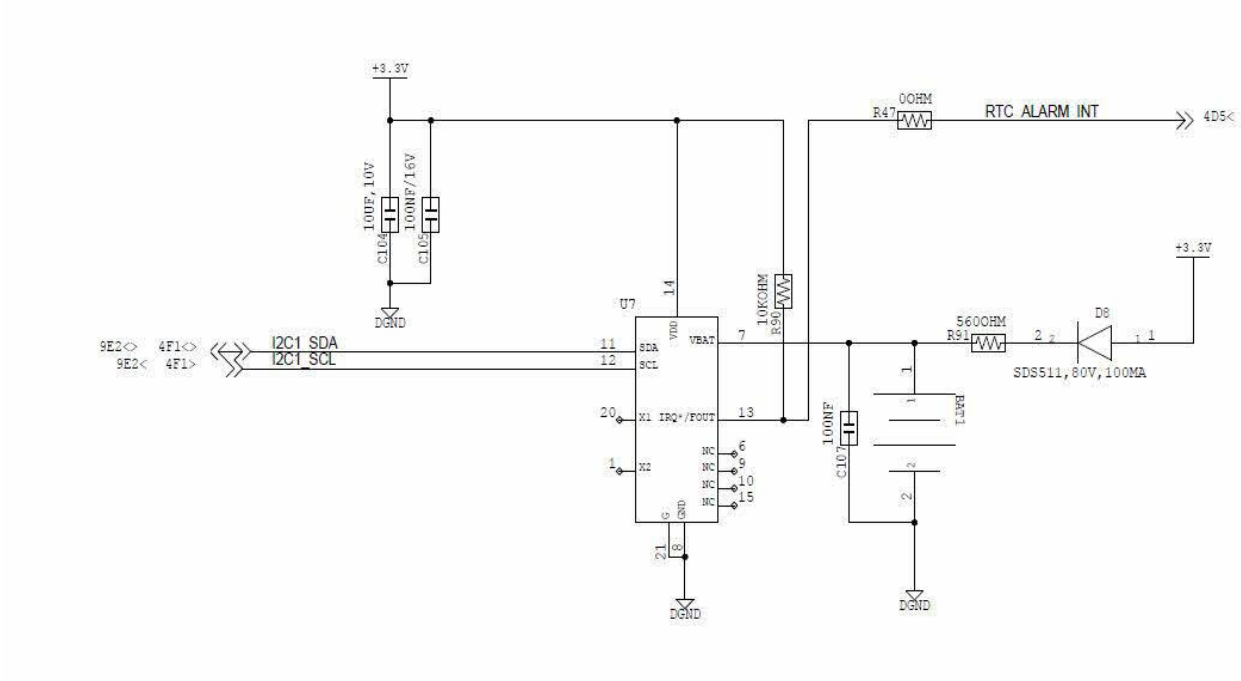
+3.3V
10UF,10V
C104
100NF/16V
C105
DGND
U7
14
VDD
VBAT
7
10KOHM
R90
R47
0OHM
RTC ALARM INT
4D5<
+3.3V
D8
5600HM
R91
SDS511,80V,100MA
9E2<> 4F1<>
9E2< 4F1>
I2C1_SDA
I2C1_SCL
11
12
SDA
SCL
20
X1
IRQ*/FOUT
13
1
X2
NC
6
9
10
15
21
8
GND
DGND
100NF
C107
BAT1
DGND

XNP-6320

Unit : mm (inch)

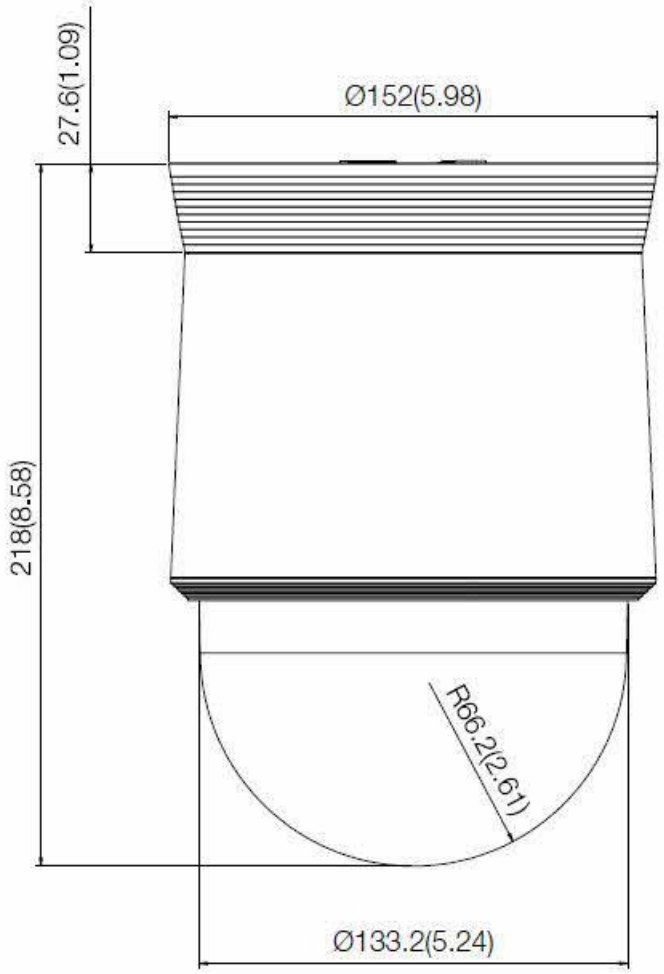

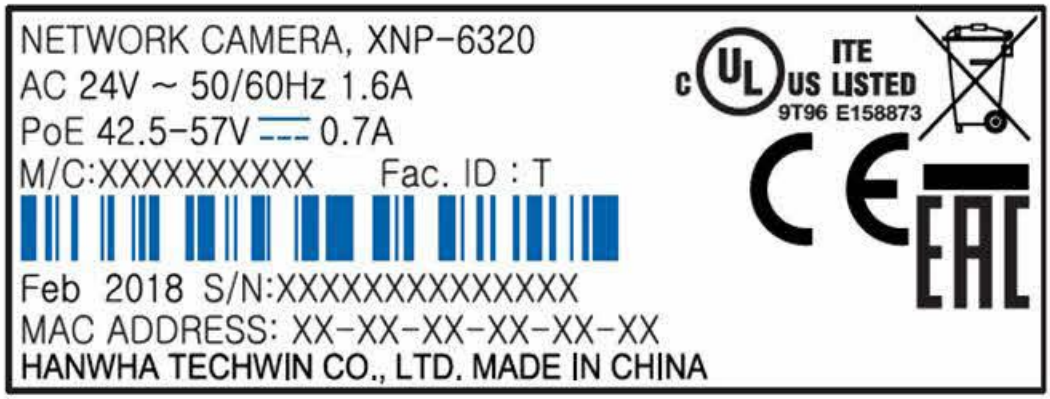
NETWORK CAMERA, XNP-6320
AC 24V ~ 50/60Hz 1.6A
PoE 42.5-57V ⎓ 0.7A
M/C:XXXXXXXXXX Fac. ID : T
Feb 2018 S/N:XXXXXXXXXXXXXX
MAC ADDRESS: XX-XX-XX-XX-XX-XX
HANWHA TECHWIN CO., LTD. MADE IN CHINA
c UL us
ITE
LISTED
9T96 E158873

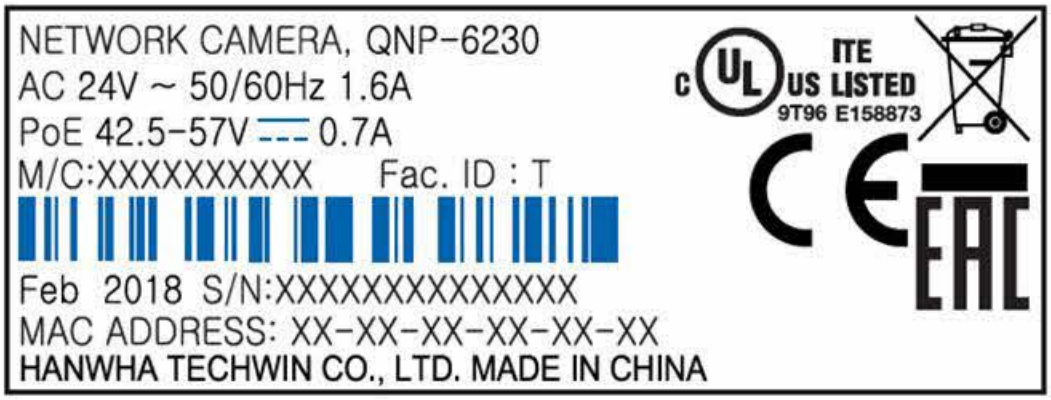
NETWORK CAMERA, QNP-6230
AC 24V ~ 50/60Hz 1.6A
PoE 42.5-57V ⎓ 0.7A
M/C:XXXXXXXXXX Fac. ID : T
Feb 2018 S/N:XXXXXXXXXXXXXX
MAC ADDRESS: XX-XX-XX-XX-XX-XX
HANWHA TECHWIN CO., LTD. MADE IN CHINA
c UL us
ITE
LISTED
9T96 E158873

Test Record No. 1

1. Test result relate only to the items tested.

2. The manufacturer submitted representative production samples of NETWORK CAMERA, Model XNP-6320.

3. Only the test listed were considered necessary.

The following tests were conducted:

Test	Testing Location/Comments
End Product Reference Page	
General Guidelines	
Input: Single-Phase (1.6.2)	
SELV Reliability Test Including Hazardous Voltage Measurements (2.2.2, 2.2.3, 2.2.4, Part 22 6.1)	
Determination of Working Voltage; Working Voltage Measurement (2.10.2)	
Stress Relief (4.2.7, 4.2.1)	
Loading - Wall and Ceiling Mounted Equipment (4.2.10)	
Heating (4.5.1, 1.4.12, 1.4.13)	
Component Failure (5.3.1, 5.3.4, 5.3.7)	

Test results are valid only for the tested equipment. These tests are considered representative of the products covered by this Test Report. The test methods and results of the above tests have been reviewed and found to be in accordance with the requirements in the Standard(s) referenced at the beginning of this Test Report.

The following supplements are provided as a part of this Test Record. NOTE: These supplements are only available to the Applicant via the CDA system.

Type	Supplement Id	Description
Datasheet	2-01	Datasheet