

Analog Dome

HCD-7010RA

QHD (4MP) Analog IR Dome Camera

Key Features

- 0.26 Lux@F1.8 (Color),0 Lux (B/W : IR LED on)
- Built-in 2.8mm fixed lens
- Day & Night (ICR), DWDR, Motion detection
- IR Viewable Length 20m
- Transmission distance max.500m
- Easy installation (Plug & play)

Design and specifications are subject to change without notice. The latest product information / specification can be found at HanwhaVision.com
Hanwha Vision is formerly known as Hanwha Techwin.

© Hanwha Vision CO., LTD. All rights reserved.

HCD-7010RA

QHD (4MP) Analog IR Dome Camera



Specifications

Video

Imaging Device	Size	1/3"
	Type	CMOS
Resolution		2560x1440
Max. Framerate(NTSC/PAL)		30fps/25fps
Min. Illumination	Color(1/30sec, 30IRE)	0.26
	BW(1/30sec, 30IRE)	0.026
Video Out		CVBS: 1.0Vp-p / 75Ω composite,720x480(N),720x576(P) for installation, BNC: AHD
Video Transmission Distance		500m(5C2V Coaxial Cable)

Lens

Focal Length (mm)		2.8
Max Aperture Ratio (F number)	Wide	1.8
Angular Field of View	Horizontal	107.48°
	Vertical	59.67°
	Diagonal	122.01°
Min. Object Distance		0.5m(1.64ft)

Pan / Tilt / Rotate

Pan / Tilt / Rotate Range	Pan	0°~350°
	Tilt	0°~67°
	Rotate	0°~355°

Operational

Day & Night		Auto(ICR)
Backlight Compensation		BLC, HLC, DWDR
Digital Noise Reduction		2DDNR
Motion Detection	Quantity	4ea
Privacy Masking	Quantity	2ea
Gain Control		Low, Middle, High, Very High

Design and specifications are subject to change without notice. The latest product information / specification can be found at HanwhaVision.com
Hanwha Vision is formerly known as Hanwha Techwin.

© Hanwha Vision CO., LTD. All rights reserved.

Operational

White Balance		ATW, AWC, Manual, Indoor, Outdoor
Electronic Shutter	Speed Range	1/30~1/12,000sec(N), 1/25~1/12,000sec(P)
Video Rotation		Flip, Mirror
IR Viewable Length		20m(65.62ft)
Coaxial Protocol		ACP, CVBS

Analytics

Analytics Events	Normal	Motion detection

Environmental & Electrical

Operating Condition	Temperature	-10°C~+55°C(+14°F~+131°F)
	Humidity	0~90% RH(non-condensing)
Input Voltage		12VDC
Power Consumption	12VDC	Max 5W

Mechanical

Color	Ivory
Material	PC(Polycarbonate)
Product Dimensions	Ø110.1x86.1mm(4.33x3.39”)
Product Weight	240g(0.53lb)

Design and specifications are subject to change without notice. The latest product information / specification can be found at HanwhaVision.com
Hanwha Vision is formerly known as Hanwha Techwin.

© Hanwha Vision CO., LTD. All rights reserved.

HCD-7010RA

QHD (4MP) Analog IR Dome Camera



CAD

Unit: mm [inch]

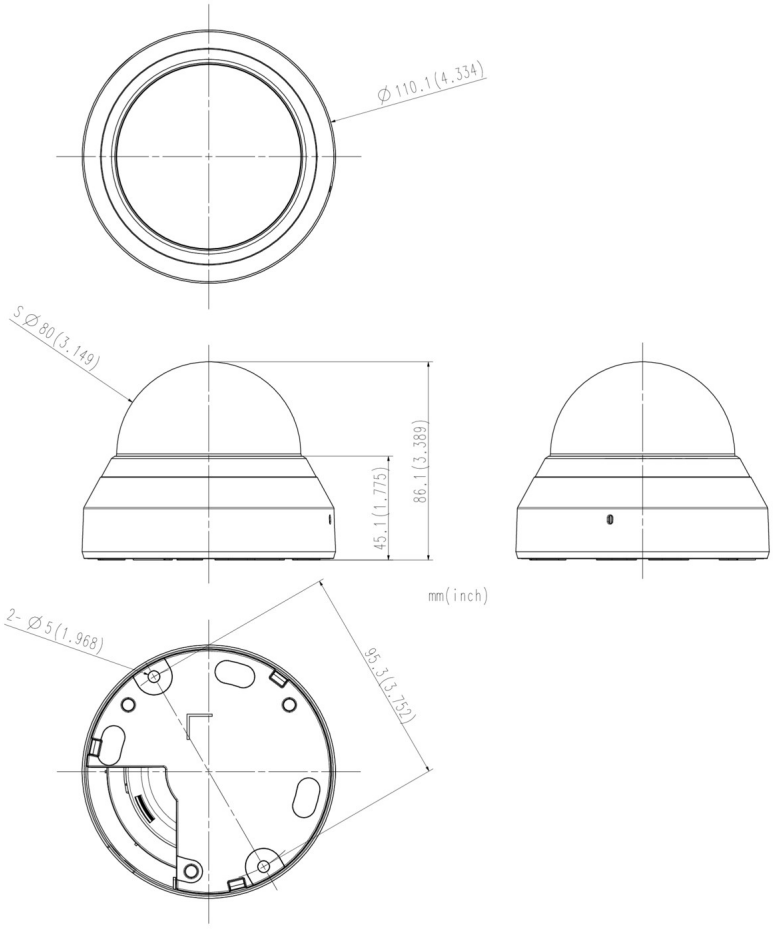

Design and specifications are subject to change without notice. The latest product information / specification can be found at HanwhaVision.com
Hanwha Vision is formerly known as Hanwha Techwin.

© Hanwha Vision CO., LTD. All rights reserved.