

Analog Dome

HCD-7070RA

QHD (4MP) Analog IR Dome Camera

Key Features

- QHD (2560 x 1440, 30fps) resolution
- 0.16 Lux@F1.6 (Color), 0 Lux (B/W : IR LED on)
- 3.2 ~ 10mm (3.1x) varifocal lens
- Day & Night (ICR), DWDR, Motion detection
- Transmission distance Max. 500m
- Easy installation (Plug & play), Dual power

Design and specifications are subject to change without notice. The latest product information / specification can be found at HanwhaVision.com
Hanwha Vision is formerly known as Hanwha Techwin.

© Hanwha Vision CO., LTD. All rights reserved.

HCD-7070RA

QHD (4MP) Analog IR Dome Camera



Specifications

Video

Imaging Device	Size	1/3"
	Type	CMOS
Resolution		2560x1440
Max. Framerate(NTSC/PAL)		30fps/25fps
Min. Illumination	Color(1/30sec, 30IRE)	0.16
	BW(1/30sec, 30IRE)	0.016
Video Out		CVBS: 1.0Vp-p / 75Ω composite,720x480(N),720x576(P) for installation, BNC: AHD
Video Transmission Distance		500m(5C2V Coaxial Cable)

Lens

Focal Length (mm)		3.2~10
Optical Zoom Ratio		3.1x
Max Aperture Ratio (F number)	Wide	1.6
Angular Field of View	Horizontal	93.48°~29.44°
	Vertical	50.47°~16.64°
	Diagonal	112.53°~33.7°
Min. Object Distance		0.5m(1.64ft)
Focus Control		Manual
Lens Type		DC auto iris(IR corrected)

Pan / Tilt / Rotate

Pan / Tilt / Rotate Range	Pan	0°~350°
	Tilt	0°~63°
	Rotate	0°~355°

Operational

Day & Night	Auto(ICR)
Backlight Compensation	BLC, HLC, DWDR
Digital Noise Reduction	2DDNR

Design and specifications are subject to change without notice. The latest product information / specification can be found at HanwhaVision.com
Hanwha Vision is formerly known as Hanwha Techwin.

© Hanwha Vision CO., LTD. All rights reserved.

Operational

Motion Detection	Quantity	4ea
Privacy Masking	Quantity	2ea
Gain Control		Low, Middle, High, Very High
White Balance		ATW, AWC, Manual, Indoor, Outdoor
Electronic Shutter	Speed Range	1/30~1/12,000sec(N), 1/25~1/12,000sec(P)
Video Rotation		Flip, Mirror
Alarm Interface	In/Out	Output 1ea
IR Viewable Length		20m(65.62ft)
Coaxial Protocol		ACP, CVBS

Analytics

Analytics Events	Normal	Motion detection

Environmental & Electrical

Operating Condition	Temperature	-10°C~+55°C(+14°F~+131°F)
	Humidity	0~90% RH(non-condensing)
Input Voltage		24VAC, 12VDC
Power Consumption	12VDC	Max 5.8W
	24VAC	Max 5.8W

Mechanical

Color	Ivory
Material	PC(Polycarbonate)
Product Dimensions	Ø119.8x98.5mm(4.72x3.88")
Product Weight	320g(0.71lb)

※ HCD-7070R has been renamed to HCD-7070RA. HCD-7070R and HCD-7070RA are the same model.

Design and specifications are subject to change without notice. The latest product information / specification can be found at HanwhaVision.com
Hanwha Vision is formerly known as Hanwha Techwin.

© Hanwha Vision CO., LTD. All rights reserved.

HCD-7070RA

QHD (4MP) Analog IR Dome Camera



CAD

Unit: mm [inch]

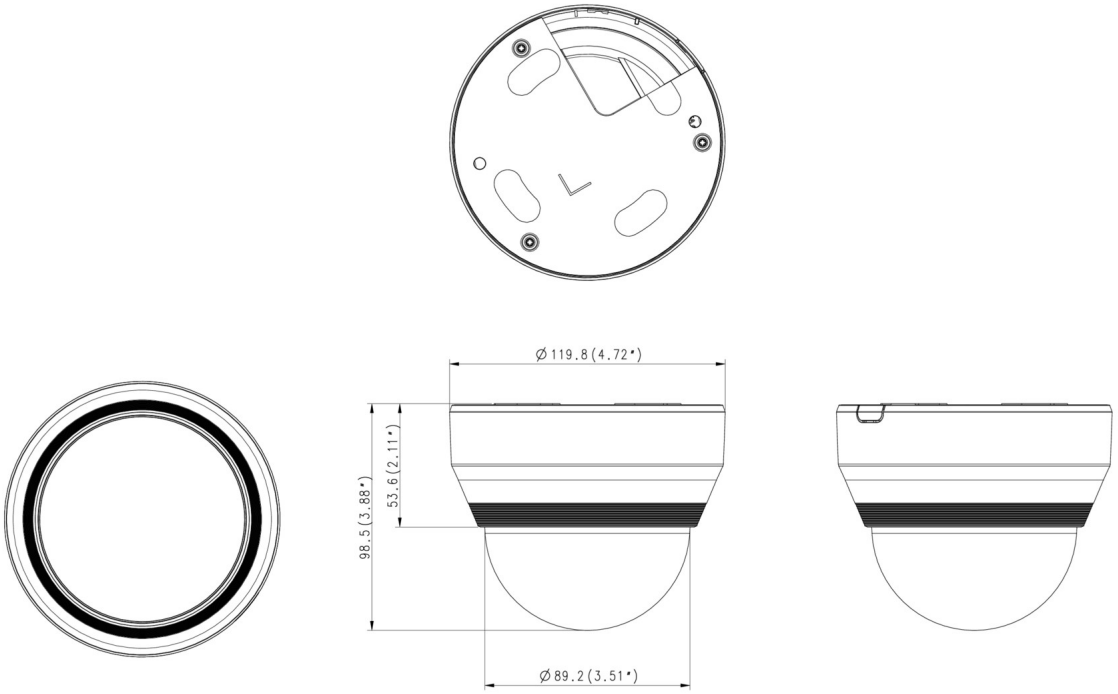

Design and specifications are subject to change without notice. The latest product information / specification can be found at HanwhaVision.com
Hanwha Vision is formerly known as Hanwha Techwin.

© Hanwha Vision CO., LTD. All rights reserved.

Compatible Devices



SBP-120WM



SBP-300PM



SBP-300KM



SBP-300LM



SBP-390WM2



SBP-300WM1



SBP-300CM



SBP-122HM



SBD-120GP



SBP-300WM



SHD-3000F2



SPB-IND6



SBP-300NB



SBP-300B

Design and specifications are subject to change without notice. The latest product information / specification can be found at HanwhaVision.com
Hanwha Vision is formerly known as Hanwha Techwin.

© Hanwha Vision CO., LTD. All rights reserved.