

Network | Цилиндрические

LNO-6012R

2MP IR Bullet Camera

Key Features

- Maximum 2MP resolution
- Color: 0.03Lux(F2.0, 1/30sec) BW : 0Lux (IR LED on)
- 2.8mm fixed focal
- Maximum 30fps@2MP all resolutions (H.264)
- H.264, MJPEG codec supported, Multiple streaming
- Day & Night (ICR), WDR (120dB)
- Tampering, Motion detection
- Micro SD/SDHC memory slot (32GB), PoE
- Hallway view (90°/270°), WiseStreamII support
- IR viewable length 30m(98.43ft)
- IP66 support

Design and specifications are subject to change without notice. The latest product information / specification can be found at HanwhaVision.com
Hanwha Vision is formerly known as Hanwha Techwin.

© Hanwha Vision CO., LTD. All rights reserved.

LNO-6012R

2MP IR Bullet Camera



Specifications

Video

Imaging Device	Size	1/2.8"
	Type	CMOS
Resolution		1920x1080, 1280x960, 1280x720, 800x600, 800x448, 720x576, 720x480, 640x480, 640x360
Max. Framerate	H.265/H.264	30fps/25fps(60Hz/50Hz)(WDR off) / 15fps/12fps(60Hz/50Hz)(WDR on)
	MJPEG	10fps(@2MP Max. 2fps)
Min. Illumination (Lux)	Color(1/30sec, 30IRE)	0.03
	BW(1/30sec, 30IRE)	0.003

Lens

Focal Length (mm)		2.8
Max Aperture Ratio (F number)	Wide	2.0
Angular Field of View	Horizontal	114°
	Vertical	62°
	Diagonal	135°
Min. Object Distance		0.5m(1.64ft)
Focus Control		Fixed

Pan / Tilt / Rotate

Pan / Tilt / Rotate Range	Pan	0°~360°
	Tilt	0°~100°
	Rotate	0°~360°

Operational

Day & Night		Auto(ICR)
Backlight Compensation		BLC, WDR, SSDR
Wide Dynamic Range (dB)		120
Digital Noise Reduction		SSNR
Motion Detection	Quantity	4ea
	Shape	Rectangler zones

Design and specifications are subject to change without notice. The latest product information / specification can be found at HanwhaVision.com
Hanwha Vision is formerly known as Hanwha Techwin.

© Hanwha Vision CO., LTD. All rights reserved.

Operational

Privacy Masking	Quantity	6ea
	Shape	Rectangular zones
Gain Control		Low, Middle, High
White Balance		ATW, AWC, Manual, Indoor, Outdoor
LDC		Support
Electronic Shutter	Mode	Minimum, Maximum, Anti flicker
	Speed Range	2~1/12,000sec
Video Rotation		Flip, Mirror, Hallway view(90°/270°)
Alarm Triggers		Analytics
Alarm Events When Alarm Trigger Occurred		File upload(image): e-mail/FTP, Notification: e-mail, Recording: SD/SDHC/SDXC or NAS recording at event triggers
Light Type		IR LED
Light Viewable Length	IR	30m(98.43ft)
IR Wavelength		850nm

Analytics

Analytics Events	Normal	Motion detection, Tampering

Network

Ethernet		RJ-45(10/100BASE-T)
Video Compression		H.265: Main, H.264: Main/Baseline/High,MJPEG
Smart Codec		WiseStream II
Bitrate Control		H.265/H.264: CBR or VBR, MJPEG: VBR
Streaming	Unicast	Up to 6 users
	Multicast	Support
	Multiple Streaming	Up to 3 profiles
Protocol		IPv4, IPv6, TCP/IP, UDP/IP, RTP(UDP), RTP(TCP), RTCP, RTSP, NTP, HTTP, HTTPS, SSL/TLS, DHCP, FTP, SMTP, ICMP, IGMPv2, SNMPv1/v2c/v3(MIB-2), ARP, DNS, DDNS, QoS, UPnP, Bonjour
Application Programming Interface	ONVIF	S, G, T
	Others	SUNAPI(HTTP API)
Direct Cloud Connection		Optional (needs gateway)

Security

OS / Firmware Protect	Encrypted firmware
User authentication	Digest authentication, Prevent brute-force attack
Network authentication	IEEE 802.1X(EAP-TLS, EAP-LEAP, EAP-PEAP, MSCHAPv2)
Secure Communication	HTTPS, WSS(WebSocket Secure), SRTP

Design and specifications are subject to change without notice. The latest product information / specification can be found at HanwhaVision.com
Hanwha Vision is formerly known as Hanwha Techwin.

© Hanwha Vision CO., LTD. All rights reserved.

Security

Access Control		IP-based access control
Data Protect		Encryption credentials, Encrypt compress for live recording file export
Audit		Access / System / Event Log management
Device ID		Device certificate(Hanwha Vision Root CA)
Secure Storage		SDcard partition encrypt(AES-256)

General

Memory	RAM	512MB
	Flash	256MB
Edge Storage	Micro SD/SDHC/SDXC	Max. 32GB x 1slot

Environmental & Electrical

Operating Condition	Temperature	-30°C~+55°C(-22°F~+131°F)
	Humidity	0~90% RH(non-condensing)
	Others	Start up should be done at above -20°C
Storage Condition	Temperature	-30°C~+55°C(-22°F~+131°F)
	Humidity	0~90% RH(non-condensing)
Input Voltage		PoE(IEEE802.3af, Class3)
Power Consumption	PoE	Max 6.4W, Typical 5.0W

Mechanical

Color		Dark grey
Material		Plastic
Product Dimensions		ø78.0x262.0mm(ø3.07x10.31")
Product Weight		390g(0.86lb)

Certifications & Standards

Environment		IEC 60529 IP66, IEC 62262 IK10

DORI (EN62676-4 standard)

Detect (25PPM/ 8PPF)	Wide	25.1m(82.28ft)
Observe (63PPM/ 19PPF)	Wide	10.0m(32.91ft)
Recognize (125PPM/ 38PPF)	Wide	5.0m(16.46ft)
Identify (250PPM/ 76PPF)	Wide	2.5m(8.23ft)

Design and specifications are subject to change without notice. The latest product information / specification can be found at HanwhaVision.com
Hanwha Vision is formerly known as Hanwha Techwin.

© Hanwha Vision CO., LTD. All rights reserved.

LNO-6012R

2MP IR Bullet Camera



CAD

Unit: mm [inch]

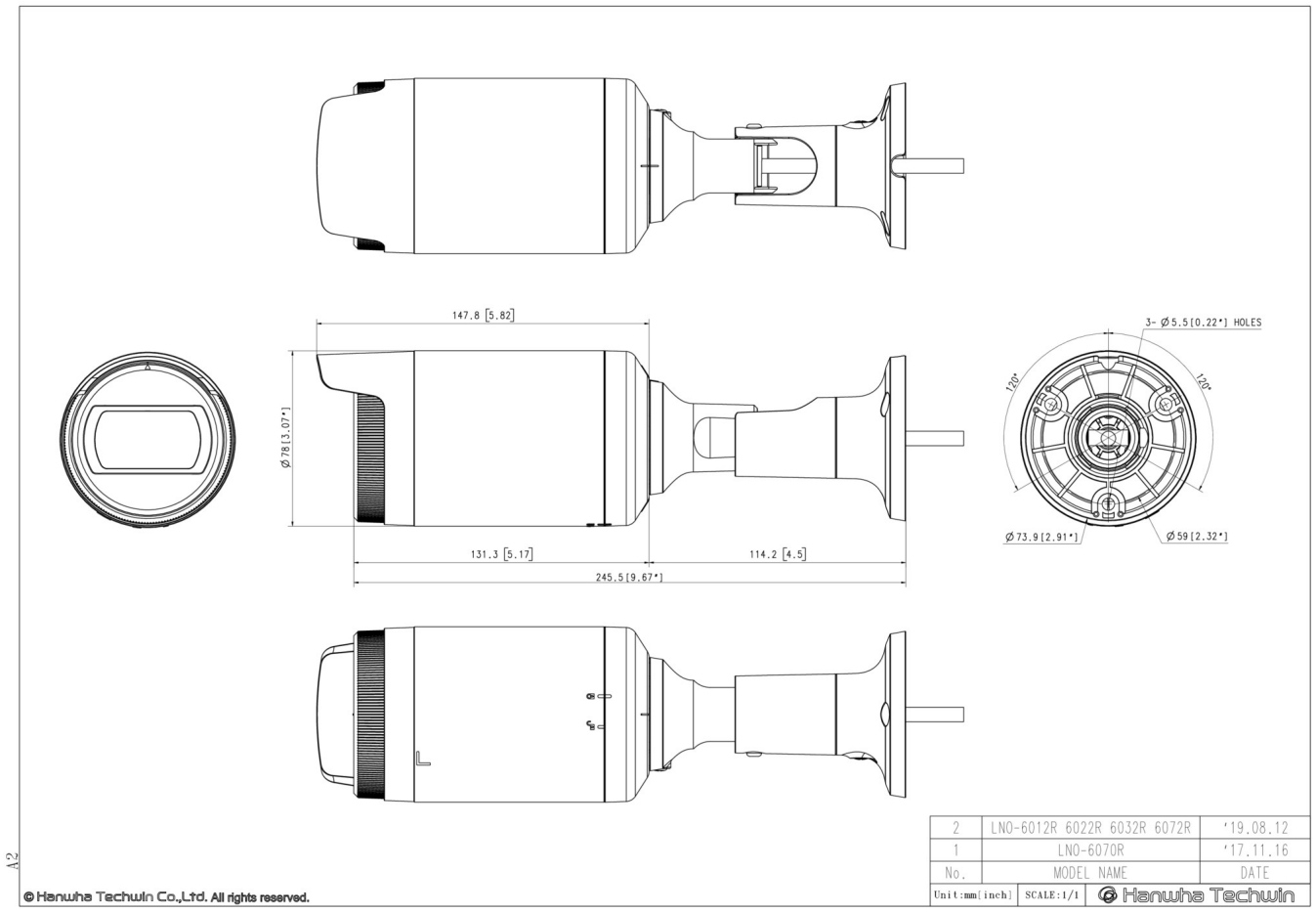

Design and specifications are subject to change without notice. The latest product information / specification can be found at HanwhaVision.com
Hanwha Vision is formerly known as Hanwha Techwin.

© Hanwha Vision CO., LTD. All rights reserved.