

Network Dome

LNV-6072R

2MP IR Vandal Dome Camera

Key Features

- Maximum 2MP resolution
- Color: 0.03Lux(F1.6, 1/30sec) BW : 0Lux (IR LED on)
- 3.2~10mm(3.1x) manual varifocal
- Maximum 30fps@2MP all resolutions (H.264)
- H.264, MJPEG codec supported, Multiple streaming
- Day & Night (ICR), WDR (120dB)
- Tampering, Motion detection
- Micro SD/SDHC memory slot (32GB), PoE
- Hallway view (90°/270°), WiseStreamII support
- IR viewable length 30m(98.43ft)
- IP66, IK10 support

Design and specifications are subject to change without notice. The latest product information / specification can be found at HanwhaVision.com
Hanwha Vision is formerly known as Hanwha Techwin.

© Hanwha Vision CO., LTD. All rights reserved.

LNV-6072R

2MP IR Vandal Dome Camera



Specifications

Video

Imaging Device	Size	1/2.8"
	Type	CMOS
Resolution		1920x1080, 1280x960, 1280x720, 800x600, 800x448, 720x576, 720x480, 640x480, 640x360
Max. Framerate	H.265/H.264	30fps/25fps(60Hz/50Hz)(WDR off) / 15fps/12fps(60Hz/50Hz)(WDR on)
	MJPEG	10fps(@2MP Max. 2fps)
Min. Illumination (Lux)	Color(1/30sec, 30IRE)	0.03
	BW(1/30sec, 30IRE)	0.003

Lens

Focal Length (mm)		3.2~10
Zoom Ratio	Optical	3.1x
Max Aperture Ratio (F number)	Wide	1.6
	Tele	2.9
Angular Field of View	Horizontal	109°~33°
	Vertical	58°~18°
	Diagonal	132°~38°
Min. Object Distance		0.5m(1.64ft)
Focus Control		Manual
Lens Type		DC auto iris

Pan / Tilt / Rotate

Pan / Tilt / Rotate Range	Pan	0°~350°
	Tilt	0°~67°
	Rotate	0°~355°

Operational

Day & Night	Auto(ICR)
Backlight Compensation	BLC, WDR, SSDR
Wide Dynamic Range (dB)	120

Design and specifications are subject to change without notice. The latest product information / specification can be found at HanwhaVision.com
Hanwha Vision is formerly known as Hanwha Techwin.

© Hanwha Vision CO., LTD. All rights reserved.

Operational

Digital Noise Reduction		SSNR
Motion Detection	Quantity	4ea
	Shape	Rectangler zones
Privacy Masking	Quantity	6ea
	Shape	Rectangular zones
Gain Control		Low, Middle, High
White Balance		ATW, AWC, Manual, Indoor, Outdoor
LDC		Support
Electronic Shutter	Mode	Minimum, Maximum, Anti flicker
	Speed Range	2~1/12,000sec
Video Rotation		Flip, Mirror, Hallway view(90°/270°)
Alarm Triggers		Analytics
Alarm Events When Alarm Trigger Occurred		File upload(image): e-mail/FTP, Notification: e-mail, Recording: SD/SDHC/SDXC or NAS recording at event triggers
Light Type		IR LED
Light Viewable Length	IR	30m(98.43ft)
IR Wavelength		850nm

Analytics

Analytics Events	Normal	Motion detection, Tampering

Network

Ethernet		RJ-45(10/100BASE-T)
Video Compression		H.265: Main, H.264: Main/Baseline/High,MJPEG
Smart Codec		WiseStream II
Bitrate Control		H.265/H.264: CBR or VBR, MJPEG: VBR
Streaming	Unicast	Up to 6 users
	Multicast	Support
	Multiple Streaming	Up to 3 profiles
Protocol		IPv4, IPv6, TCP/IP, UDP/IP, RTP(UDP), RTP(TCP), RTCP, RTSP, NTP, HTTP, HTTPS, SSL/TLS, DHCP, FTP, SMTP, ICMP, IGMPv2, SNMPv1/v2c/v3(MIB-2), ARP, DNS, DDNS, QoS, UPnP, Bonjour
Application Programming Interface	ONVIF	S, G, T
	Others	SUNAPI(HTTP API)

Security

OS / Firmware Protect	Encrypted firmware
User authentication	Digest authentication, Prevent brute-force attack

Design and specifications are subject to change without notice. The latest product information / specification can be found at HanwhaVision.com
Hanwha Vision is formerly known as Hanwha Techwin.

© Hanwha Vision CO., LTD. All rights reserved.

Security

Network authentication	IEEE 802.1X(EAP-TLS, EAP-LEAP, EAP-PEAP, MSCHAPv2)
Secure Communication	HTTPS, WSS(WebSocket Secure), SRTP
Access Control	IP-based access control
Data Protect	Encryption credentials, Encrypt compress for live recording file export
Audit	Access / System / Event Log management
Device ID	Device certificate(Hanwha Vision Root CA)
Secure Storage	SDcard partition encrypt(AES-256)

General

Memory	RAM	512MB
	Flash	256MB
Edge Storage	Micro SD/SDHC/SDXC	Max. 32GB x 1slot

Environmental & Electrical

Operating Condition	Temperature	-30°C~+55°C(-22°F~+131°F)
	Humidity	0~90% RH(non-condensing)
	Others	Start up should be done at above -20°C
Storage Condition	Temperature	-30°C~+55°C(-22°F~+131°F)
	Humidity	0~90% RH(non-condensing)
Input Voltage		PoE(IEEE802.3af, Class3)
Power Consumption	PoE	Max 6.4W, Typical 5.0W

Mechanical

Color	White
Material	Aluminum, Plastic
RAL Code	RAL9003
Product Dimensions	ø137.8x106.1mm(ø5.43x4.18")
Product Weight	525g(1.16lb)

Certifications & Standards

Environment	IEC 60529 IP66, IEC 62262 IK10

DORI (EN62676-4 standard)

Detect (25PPM/ 8PPF)	Wide	27.4m(89.85ft)
	Tele	128.8m(422.56ft)
Observe (63PPM/ 19PPF)	Wide	11.0m(35.94ft)
	Tele	51.5m(169.02ft)
Recognize (125PPM/ 38PPF)	Wide	5.5m(17.97ft)
	Tele	25.8m(84.51ft)

Design and specifications are subject to change without notice. The latest product information / specification can be found at HanwhaVision.com
Hanwha Vision is formerly known as Hanwha Techwin.

© Hanwha Vision CO., LTD. All rights reserved.

DORI (EN62676-4 standard)

Identify (250PPM/ 76PPF)	Wide	2.7m(8.99ft)
	Tele	12.9m(42.26ft)

Design and specifications are subject to change without notice. The latest product information / specification can be found at HanwhaVision.com
Hanwha Vision is formerly known as Hanwha Techwin.

© Hanwha Vision CO., LTD. All rights reserved.

LNV-6072R

2MP IR Vandal Dome Camera



CAD

Unit: mm [inch]

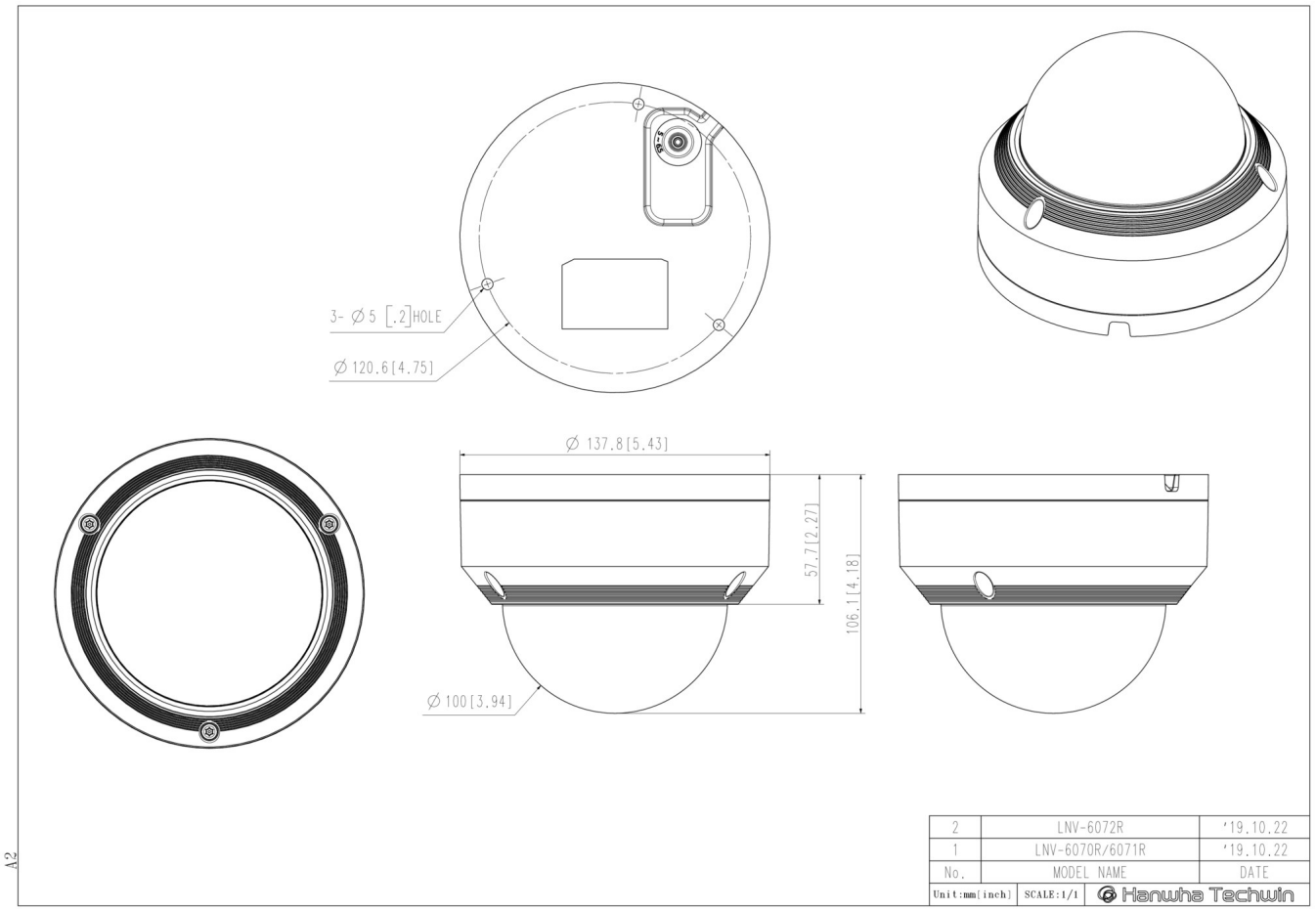

Design and specifications are subject to change without notice. The latest product information / specification can be found at HanwhaVision.com
Hanwha Vision is formerly known as Hanwha Techwin.

© Hanwha Vision CO., LTD. All rights reserved.