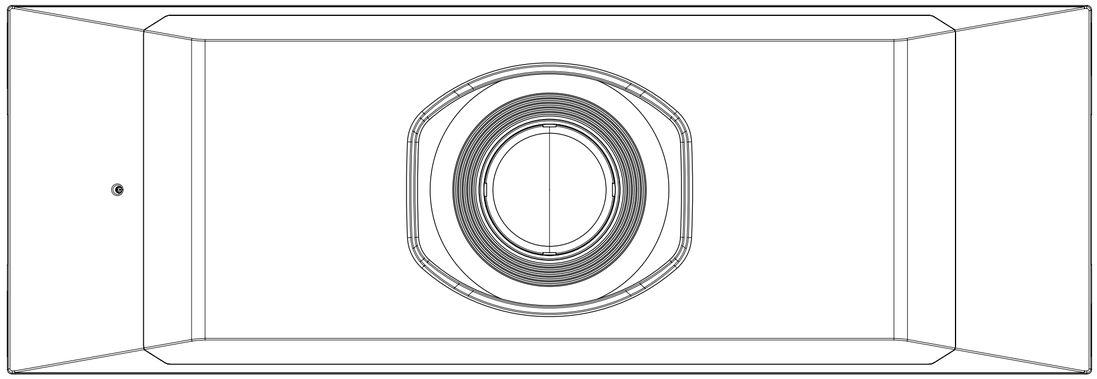

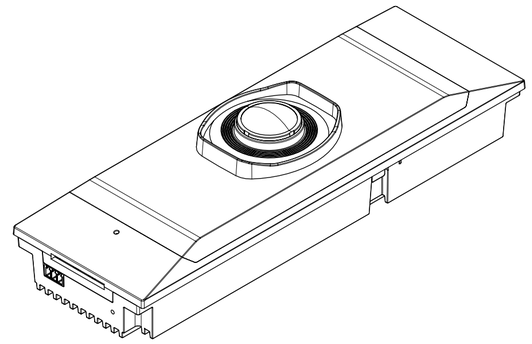

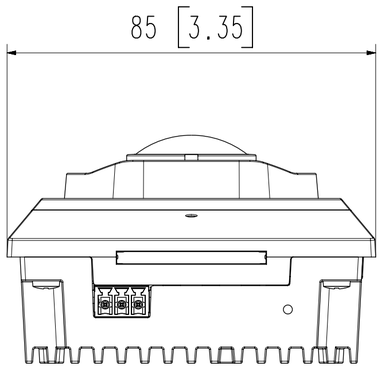

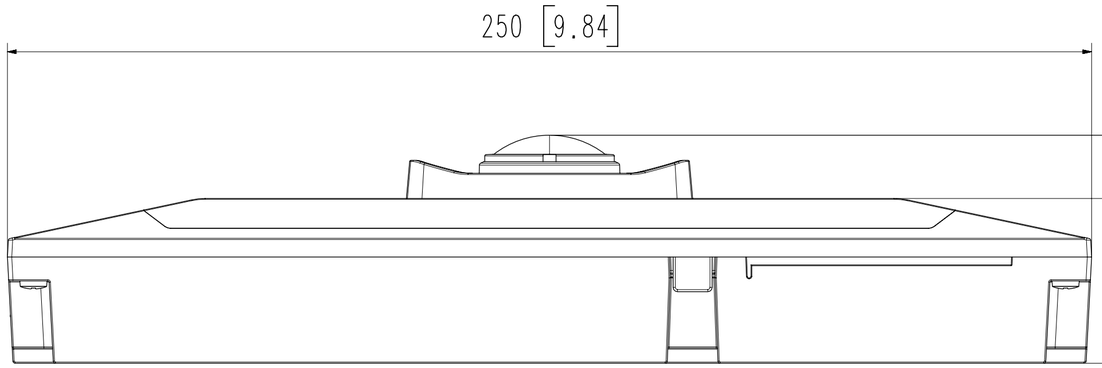

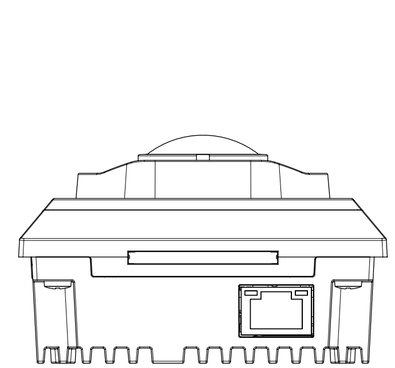

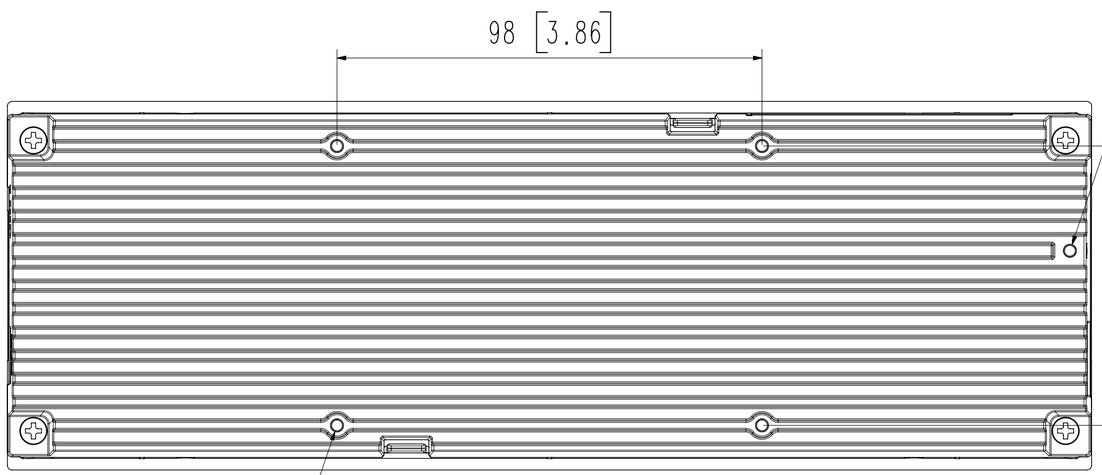

1	MGC-F9020LI	'26.11.24
No.	MODEL NAME	DATE
Unit:mm[inch]	SCALE:1/1	Hanwha Vision

A2

© Hanwha Vision Co.,Ltd. All rights reserved.