

Network

# PNM-7002VD

2MP x 2CH Multi-directional Camera

## Key Features

- 2ea x 1920 x 1080 resolution
- Max. 60fps@2M (H.265 / H.264)
- H.265, H.264, MJPEG codec supported
- Day & Night, WDR (150dB)
- Loitering, Directional detection, Fog detection
- Motion detection, Tampering, WiseStreamII Support
- SD/SDHC/SDXC memory 2 slots (each camera)

Design and specifications are subject to change without notice. The latest product information / specification can be found at HanwhaVision.com
Hanwha Vision is formerly known as Hanwha Techwin.

© Hanwha Vision CO., LTD. All rights reserved.

# PNM-7002VD

2MP x 2CH Multi-directional Camera



## Specifications

### 映像

| | | |
|---|---|---|
| 解像度 | | 1920x1080, 1280x1024, 1280x960, 1280x720, 1024x768, 800x600, 800x448, 720x576, 720x480, 640x480, 640x360, 320x240 |
| Max. Framerate | H.265/H.264 | 60fps/50fps(60Hz/50Hz) |
| | MJPEG | 30fps |
| Video Out | | CVBS: 1.0 Vp-p / 75Ω composite for installation |

### レンズ

| | |
|---|---|
| Optional Lens | SLA-2M2402D, SLA-2M2802D, SLA-2M3602D, SLA-2M6002D |

### 技能

| | | |
|---|---|---|
| Day & Night | | Auto(Electrical) |
| Backlight Compensation | | BLC, HLC , WDR, SSDR |
| Wide Dynamic Range (dB) | | 150 |
| Digital Noise Reduction | | SSNR V |
| Digital Image Stabilization | | サポート |
| 曇り除去 | | サポート |
| モーション検知 | Quantity | 8ea |
| | Shape | 8point Polygonal zones |
| Privacy Masking | Quantity | 32ea |
| | Shape | Polygonal zones |
| | Color / Option | 灰色, 緑, Red, 青, 黒, 白, モザイク |
| ゲイン制御 | | 低, 中, 高 |
| ホワイトバランス | | ATW, AWC, 手動, 室内, 屋外 |
| LDC | | サポート |
| Electronic Shutter | モード | 最小, 最大, アンチフリッカー |
| | Speed Range | 2~1/12,000sec |
| ビデオ回転 | | FLIPモード, ミラー, Hallway view(90°/270°) |
| Alarm Triggers | | 分析, ネットワーク切断 |

Design and specifications are subject to change without notice. The latest product information / specification can be found at HanwhaVision.com
Hanwha Vision is formerly known as Hanwha Techwin.

© Hanwha Vision CO., LTD. All rights reserved.

## 技能

| | |
|---|---|
| Alarm Events When Alarm Trigger Occurred | File upload(image): e-mail/FTP,<br>Notification: e-mail,<br>Recording: SD/SDHC/SDXC or NAS recording at event triggers |

## 分析

| | | |
|---|---|---|
| 分析イベント | 通常 | 焦点ぼけ検知, モーション検知, タンパリング, フォグ検出, 顔検出, Virtual area(Lotering, Intrusion, Enter/Exit, Appear/Disappear), Virtual line(Crossing, Direction) |

## ネットワーク

| | | |
|---|---|---|
| Ethernet | | RJ-45(10/100/1000BASE-T) |
| 映像圧縮 | | H.265/H.264: Main/Baseline/High, MJPEG |
| Smart codec | | 手動, WiseStream II |
| ビットレートコントロール | | H.265/H.264: CBR or VBR,<br>MJPEG: VBR |
| Streaming | Unicast | 最大 20ユーザー |
| | マルチキャスト | サポート |
| | Multiple Streaming | 最大 10プロファイル |
| プロトコル | | IPv4, IPv6, TCP/IP, UDP/IP, RTP(UDP), RTP(TCP), RTCP, RTSP, NTP, HTTP, HTTPS, SSL/TLS, DHCP, FTP, SMTP, ICMP, IGMP, SNMPv1/v2c/v3(MIB-2), ARP, DNS, DDNS, QoS, UPnP, Bonjour, LLDP, PIM-SM |
| Application Programming Interface | ONVIF | s, T |
| | その他 | SUNAPI(HTTP API) |
| Direct Cloud Connection | | Optional (needs gateway) |

## セキュリティ

| | |
|---|---|
| OS / Firmware Protect | Encrypted firmware, Secure boot, Signed firmware |
| ユーザー認証 | ダイジェスト認証 |
| Network authentication | IEEE 802.1X(EAP-TLS, EAP-LEAP) |
| Secure Communication | HTTPS |
| Access Control | IP-based access control |
| Data Protect | Encryption credentials, Encrypt compress for live recording file export |
| Audit | Access / System / Event Log management |
| Secure Storage | SDcard partition encrypt(AES-256) |

## 一般

| | | |
|---|---|---|
| メモリ | RAM | 3GB |
| | フラッシュ | 768MB |
| Edge Storage | Micro SD/SDHC/SDXC | Max. 256GB x 2slot(Total 512GB) |

## Environmental & Electrical

| | | |
|---|---|---|
| 動作条件 | 温度 | -40°C~+55°C(-40°F~+131°F) |
| | 湿度 | 0~90% RH(non-condensing) |

Design and specifications are subject to change without notice. The latest product information / specification can be found at HanwhaVision.com
Hanwha Vision is formerly known as Hanwha Techwin.

© Hanwha Vision CO., LTD. All rights reserved.

## Environmental & Electrical

| | | |
|---|---|---|
| 保管条件 | 温度 | -50°C~+60°C(-58°F~+140°F) |
| | 湿度 | 0~90% RH(non-condensing) |
| Input Voltage | | PoE(IEEE802.3af, Class3) |
| 消費電力 | PoE | Typical: 12.00W,<br>Max: 12.95W |

## Mechanical

| | |
|---|---|
| カラー | 白 |
| 材料 | アルミニウム |
| RAL Code | RAL9003 |
| Product Dimensions | ø197.6x84mm(7.78x3.31") |
| Product Weight | 1,250g(2.76lb) |
| Compatible Conduit Hole | 19.1mm(3/4")(M25) |
| Compatible Gang Box | シングル, Double, 4" Octagon, 正方形 |

## Certifications & Standards

| | |
|---|---|
| 環境 | IEC 60529 IP66, IEC 62262 IK10 |

Design and specifications are subject to change without notice. The latest product information / specification can be found at HanwhaVision.com
Hanwha Vision is formerly known as Hanwha Techwin.

© Hanwha Vision CO., LTD. All rights reserved.

## Compatible lenses

the specifications for lenses



SLA-2M2402D



SLA-2M3602D



SLA-2M2802D



SLA-2M6002D

Design and specifications are subject to change without notice. The latest product information / specification can be found at HanwhaVision.com
Hanwha Vision is formerly known as Hanwha Techwin.

© Hanwha Vision CO., LTD. All rights reserved.

# PNM-7002VD

2MP x 2CH Multi-directional Camera



## CAD

**Unit:** mm [inch]

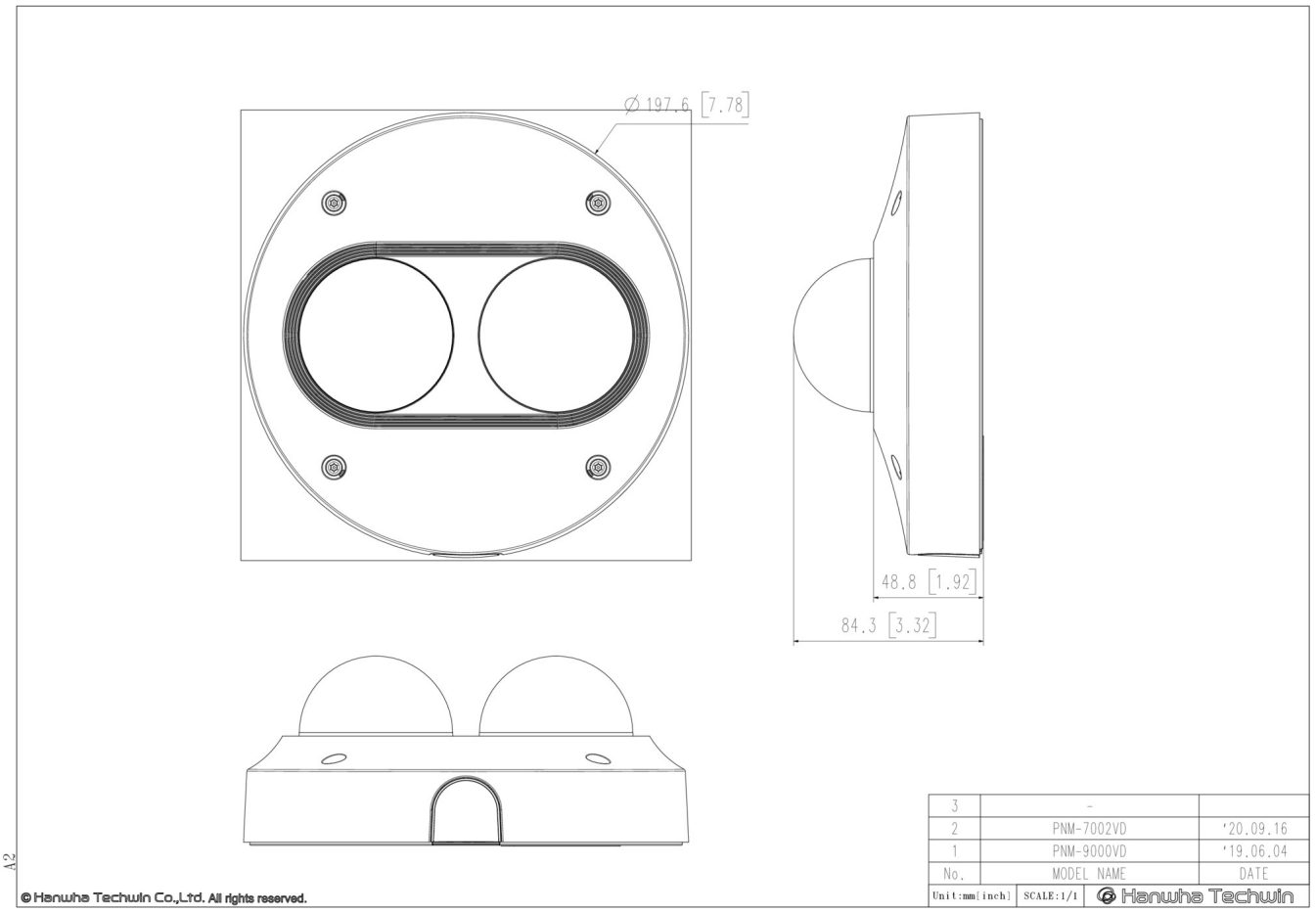


Design and specifications are subject to change without notice. The latest product information / specification can be found at HanwhaVision.com
Hanwha Vision is formerly known as Hanwha Techwin.

© Hanwha Vision CO., LTD. All rights reserved.

## Compatible Devices


SBP-300WMW1


SBP-201HMW


SBP-300WMW


SBP-300CMW



© Hanwha Vision CO., LTD. All rights reserved.