

Network

# PNM-7002VD

## 2MP x 2CH Multi-directional Camera

## Key Features

- 2ea x 1920 x 1080 resolution
- Max. 60fps@2M (H.265 / H.264)
- H.265, H.264, MJPEG codec supported
- Day & Night, WDR (150dB)
- Loitering, Directional detection, Fog detection
- Motion detection, Tampering, WiseStreamII Support
- SD/SDHC/SDXC memory 2 slots (each camera)

Design and specifications are subject to change without notice. The latest product information / specification can be found at HanwhaVision.com
Hanwha Vision is formerly known as Hanwha Techwin.

© Hanwha Vision CO., LTD. All rights reserved.

# PNM-7002VD

2MP x 2CH Multi-directional Camera



## Specifications

### Video

| | | |
|---|---|---|
| **Resolution** | | 1920x1080, 1280x1024, 1280x960, 1280x720, 1024x768, 800x600, 800x448, 720x576, 720x480, 640x480, 640x360, 320x240 |
| **Max. Framerate** | H.265/H.264 | 60fps/50fps(60Hz/50Hz) |
| | MJPEG | 30fps |
| **Video Out** | | CVBS: 1.0 Vp-p / 75Ω composite for installation |

### Lens

| | | |
|---|---|---|
| **Optional Lens** | | SLA-2M2402D, SLA-2M2802D, SLA-2M3602D, SLA-2M6002D |

### Operational

| | | |
|---|---|---|
| **Day & Night** | | Auto(Electrical) |
| **Backlight Compensation** | | BLC, HLC, WDR, SSDR |
| **Wide Dynamic Range (dB)** | | 150 |
| **Digital Noise Reduction** | | SSNR V |
| **Digital Image Stabilization** | | Support |
| **Defog** | | Support |
| **Motion Detection** | Quantity | 8ea |
| | Shape | 8point Polygonal zones |
| **Privacy Masking** | Quantity | 32ea |
| | Shape | Polygonal zones |
| | Color / Option | Gray, Green, Red, Blue, Black, White, Mosaic |
| **Gain Control** | | Low, Middle, High |
| **White Balance** | | ATW, AWC, Manual, Indoor, Outdoor |
| **LDC** | | Support |
| **Electronic Shutter** | Mode | Minimum, Maximum, Anti flicker |
| | Speed Range | 2~1/12,000sec |
| **Video Rotation** | | Flip, Mirror, Hallway view(90°/270°) |
| **Alarm Triggers** | | Analytics, Network disconnect |
| **Alarm Events When Alarm Trigger Occurred** | | File upload(image): e-mail/FTP,<br>Notification: e-mail,<br>Recording: SD/SDHC/SDXC or NAS recording at event triggers |

Design and specifications are subject to change without notice. The latest product information / specification can be found at HanwhaVision.com
Hanwha Vision is formerly known as Hanwha Techwin.

© Hanwha Vision CO., LTD. All rights reserved.

## Analytics

| | | |
|---|---|---|
| **Analytics Events** | Normal | Defocus detection, Motion detection, Tampering, Fog detection, Face detection, Virtual area(Lotering, Intrusion, Enter/Exit, Appear/Disappear), Virtual line(Crossing, Direction) |

## Network

| | | |
|---|---|---|
| **Ethernet** | | RJ-45(10/100/1000BASE-T) |
| **Video Compression** | | H.265: Main,<br>H.264: Main/Baseline/High,MJPEG |
| **Smart Codec** | | Manual, WiseStream II |
| **Bitrate Control** | | H.265/H.264: CBR or VBR,<br>MJPEG: VBR |
| **Streaming** | Unicast | Up to 20 users |
| | Multicast | Support |
| | Multiple Streaming | Up to 10 profiles |
| **Protocol** | | IPv4, IPv6, TCP/IP, UDP/IP, RTP(UDP), RTP(TCP), RTCP, RTSP, NTP, HTTP, HTTPS, SSL/TLS, DHCP, FTP, SMTP, ICMP, IGMPv2, SNMPv1/v2c/v3(MIB-2), ARP, DNS, DDNS, QoS, UPnP, Bonjour, LLDP, PIM-SM |
| **Application Programming Interface** | ONVIF | S, T |
| | Others | SUNAPI(HTTP API) |
| **Direct Cloud Connection** | | Optional (needs gateway) |

## Security

| | |
|---|---|
| **OS / Firmware Protect** | Encrypted firmware, Secure boot, Signed firmware |
| **User authentication** | Digest authentication |
| **Network authentication** | IEEE 802.1X(EAP-TLS, EAP-LEAP) |
| **Secure Communication** | HTTPS |
| **Access Control** | IP-based access control |
| **Data Protect** | Encryption credentials, Encrypt compress for live recording file export |
| **Audit** | Access / System / Event Log management |
| **Secure Storage** | SDcard partition encrypt(AES-256) |

## General

| | | |
|---|---|---|
| **Memory** | RAM | 3GB |
| | Flash | 768MB |
| **Edge Storage** | Micro SD/SDHC/SDXC | Max. 256GB x 2slot(Total 512GB) |

## Environmental & Electrical

| | | |
|---|---|---|
| **Operating Condition** | Temperature | -40°C~+55°C(-40°F~+131°F) |
| | Humidity | 0~90% RH(non-condensing) |
| **Storage Condition** | Temperature | -50°C~+60°C(-58°F~+140°F) |
| | Humidity | 0~90% RH(non-condensing) |
| **Input Voltage** | | PoE(IEEE802.3af, Class3) |

Design and specifications are subject to change without notice. The latest product information / specification can be found at HanwhaVision.com
Hanwha Vision is formerly known as Hanwha Techwin.

© Hanwha Vision CO., LTD. All rights reserved.

## Environmental & Electrical

| | | |
|---|---|---|
| **Power Consumption** | PoE | Typical: 12.00W,<br>Max: 12.95W |

## Mechanical

| | |
|---|---|
| **Color** | White |
| **Material** | Aluminum |
| **RAL Code** | RAL9003 |
| **Product Dimensions** | ø197.6x84mm(7.78x3.31") |
| **Product Weight** | 1,250g(2.76lb) |
| **Compatible Conduit Hole** | 19.1mm(3/4")(M25) |
| **Compatible Gang Box** | Single, Double, 4" Octagon, Square |

## Certifications & Standards

| | |
|---|---|
| **Environment** | IEC 60529 IP66, IEC 62262 IK10 |

Design and specifications are subject to change without notice. The latest product information / specification can be found at HanwhaVision.com
Hanwha Vision is formerly known as Hanwha Techwin.

© Hanwha Vision CO., LTD. All rights reserved.

## Compatible lenses

the specifications for lenses



SLA-2M2402D



SLA-2M3602D



SLA-2M2802D



SLA-2M6002D

Design and specifications are subject to change without notice. The latest product information / specification can be found at HanwhaVision.com
Hanwha Vision is formerly known as Hanwha Techwin.

© Hanwha Vision CO., LTD. All rights reserved.

# PNM-7002VD

2MP x 2CH Multi-directional Camera



## CAD

**Unit:** mm [inch]

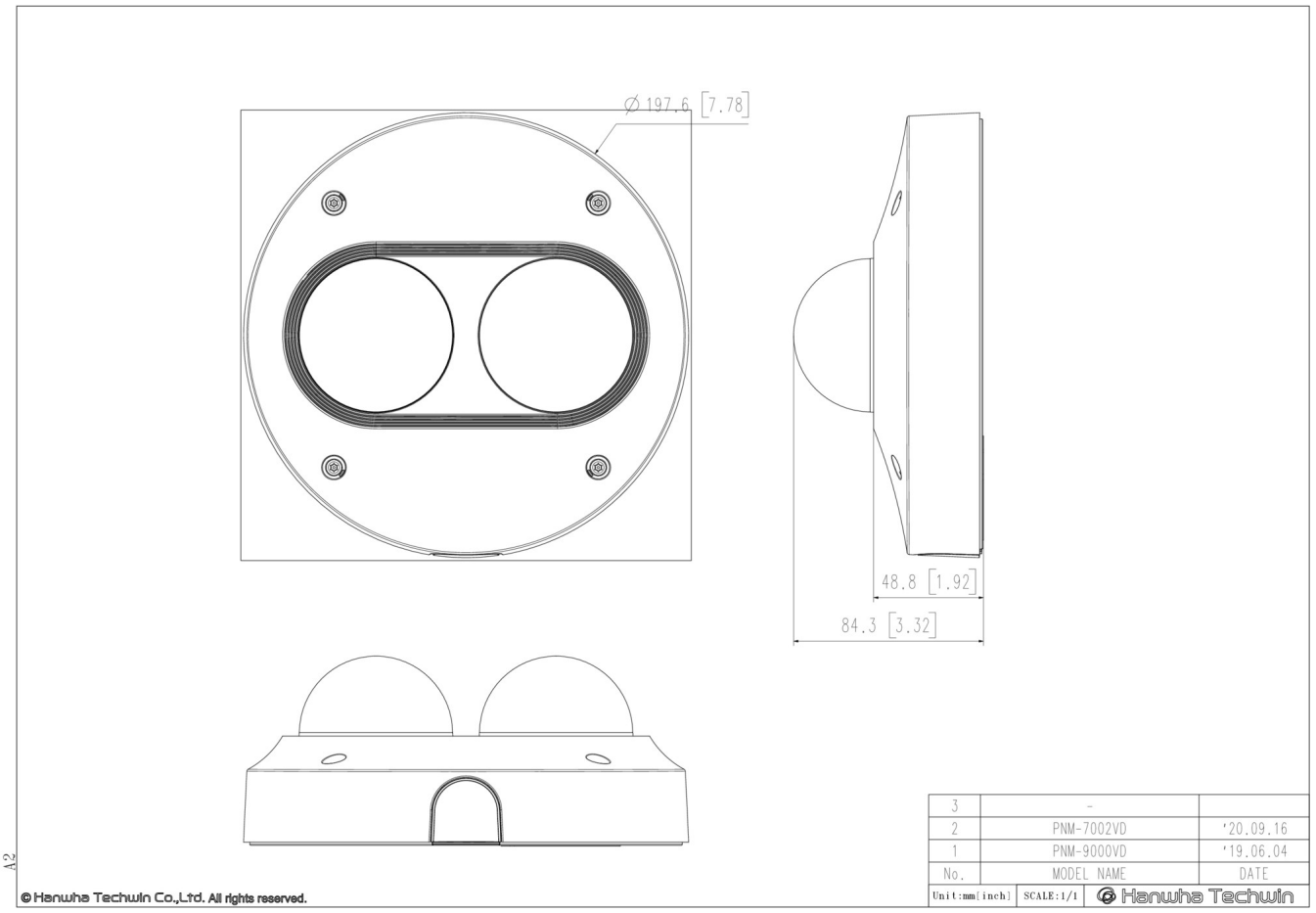


Design and specifications are subject to change without notice. The latest product information / specification can be found at HanwhaVision.com
Hanwha Vision is formerly known as Hanwha Techwin.

© Hanwha Vision CO., LTD. All rights reserved.