Hanwha Vision

Network

PNM-9000VQ

2MP/5MP x 4CH Multi-directional Camera

Key Features

- Exchangeable 4ea x 2MP / 5MP lens modules
- 8MP to 20MP resolution
(depend on the combination of lens modules)
- Max. 60fps@2M, Max. 30fps@5M (H.265 / H.264)
- WDR 150dB with 2MP, 120dB with 5MP lens module
- 2.4mm, 2.8mm, 3.6mm, 6mm fixed lens (2MP module)
- 3.7mm, 4.6mm, 7mm fixed lens (5MP module)
- H.265, H.264, MJPEG codec, Multi streaming support
- Video analytics, WiseStream II
- IP66, IK10, SD / SDHC / SDXC memory 4 slots

Design and specifications are subject to change without notice. The latest product information / specification can be found at HanwhaVision.com
Hanwha Vision is formerly known as Hanwha Techwin.

© Hanwha Vision CO., LTD. All rights reserved.

Compatible lenses

the specifications for lenses

SLA-2M2800Q

SLA-5M7000Q

SLA-2M2400Q

SLA-2M6000Q

SLA-2M3600Q

SLA-5M3700Q

SLA-5M4600Q

Design and specifications are subject to change without notice. The latest product information / specification can be found at HanwhaVision.com
Hanwha Vision is formerly known as Hanwha Techwin.

© Hanwha Vision CO., LTD. All rights reserved.

PNM-9000VQ

2MP/5MP x 4CH Multi-directional Camera

CAD

Unit: mm [inch]

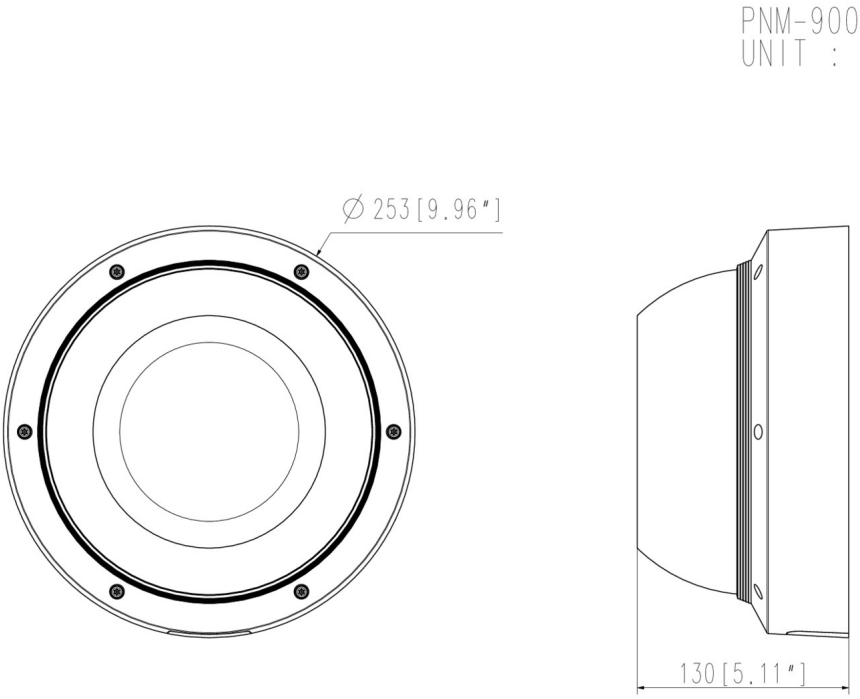

Design and specifications are subject to change without notice. The latest product information / specification can be found at HanwhaVision.com
Hanwha Vision is formerly known as Hanwha Techwin.

© Hanwha Vision CO., LTD. All rights reserved.

Compatible Devices

SBP-300PM

SBP-300KM

SBP-300LM

SBP-390WM2

SBP-300WM1

SBP-300CM

SBP-276HM

SBP-300WM

SHD-3000F5

SBP-300NB

SBP-300B

Design and specifications are subject to change without notice. The latest product information / specification can be found at HanwhaVision.com
Hanwha Vision is formerly known as Hanwha Techwin.

© Hanwha Vision CO., LTD. All rights reserved.