WISENET

NETWORK CAMERA

Quick Guide

PNM-9321VQP

COMPONENT

As for each sales country, accessories are not the same.

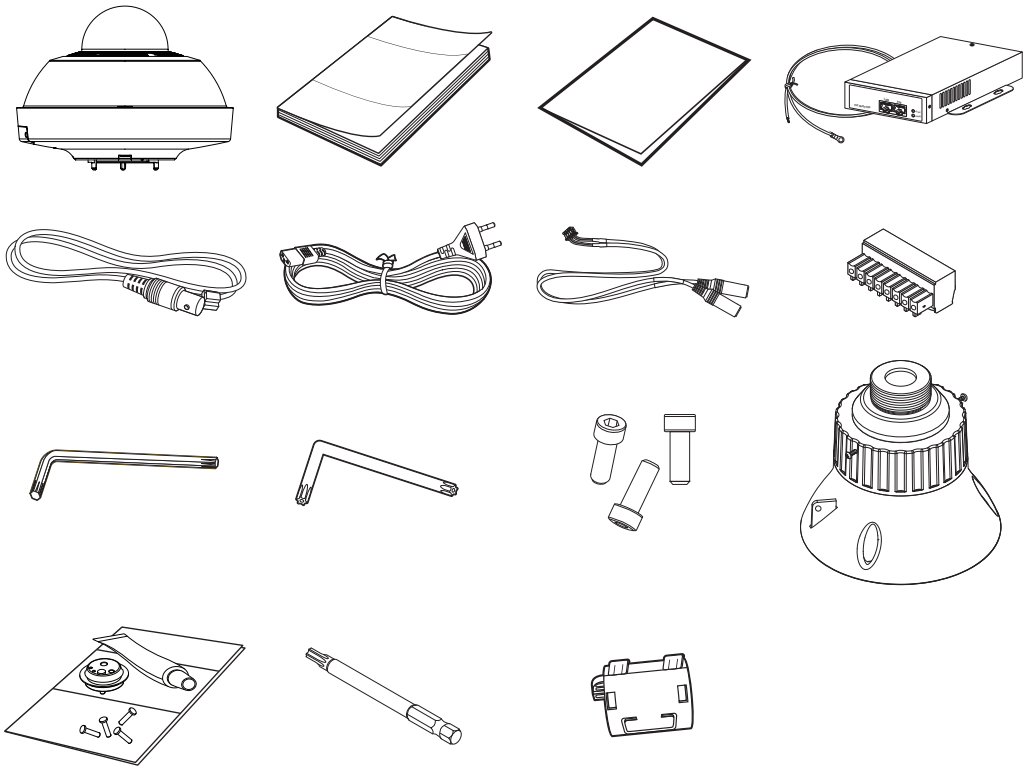

Options (not included)

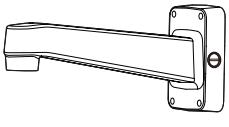		SLA-2M2400P/SLA-2M2800P/ SLA-2M3600P/SLA-2M6000P/ SLA-2M1200P
		SLA-5M3700P/SLA-5M4600P/ SLA-5M7000P

INSTALLATION

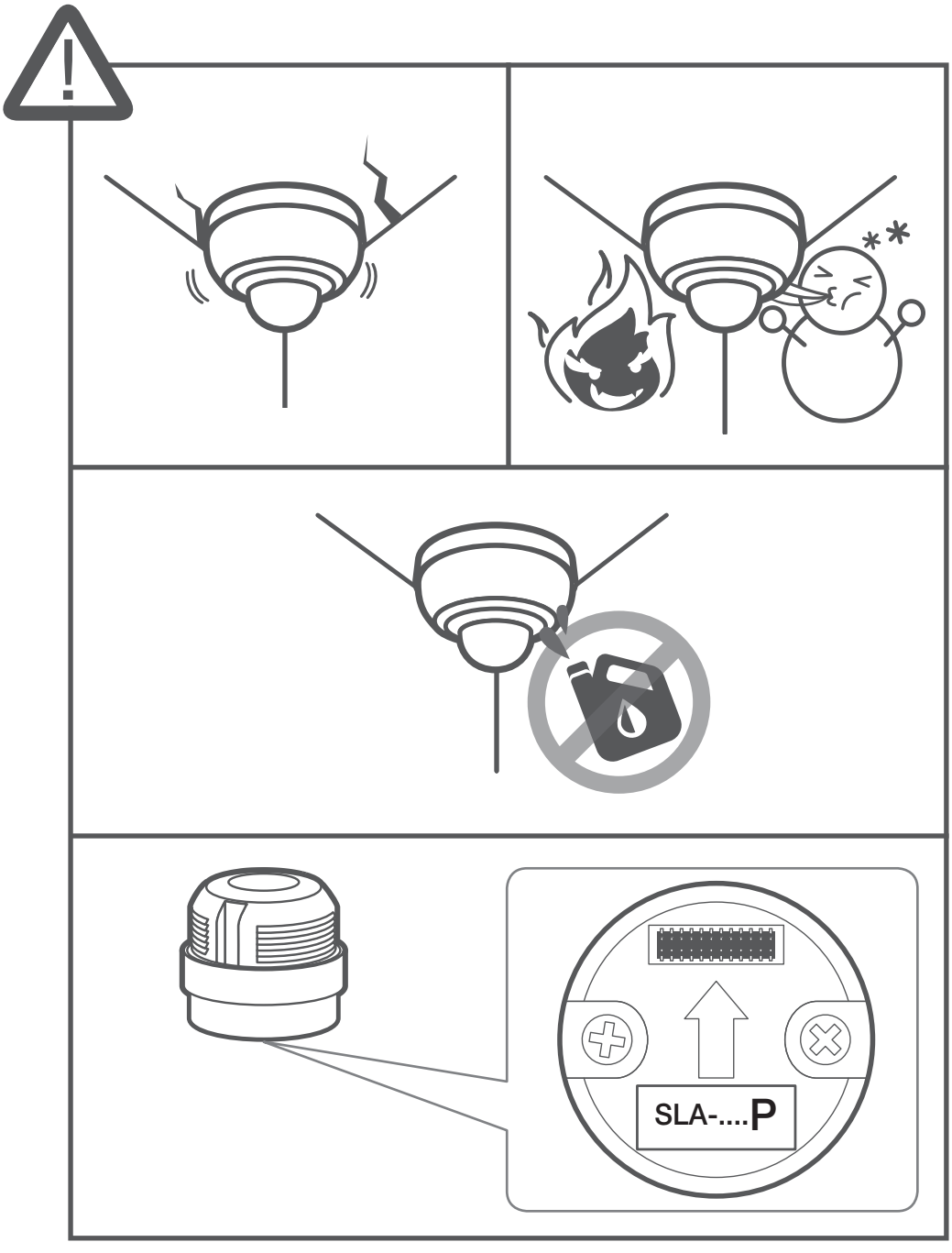

INSTALLATION

1

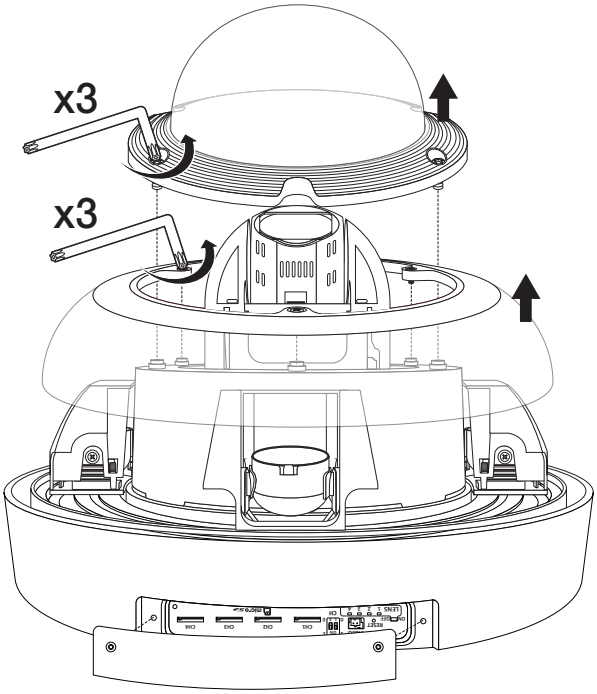

2

• Not Included : Micro SD Card

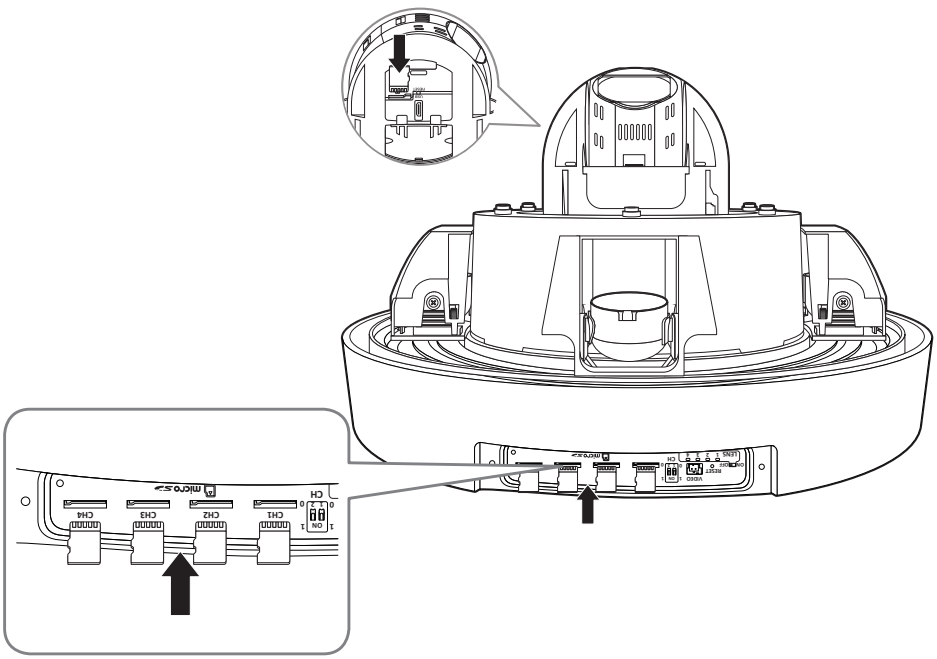

3

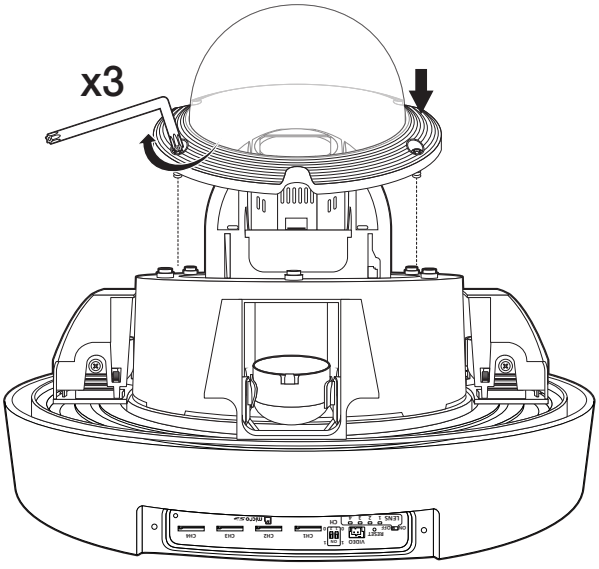

4

• Not Included : Lens Module

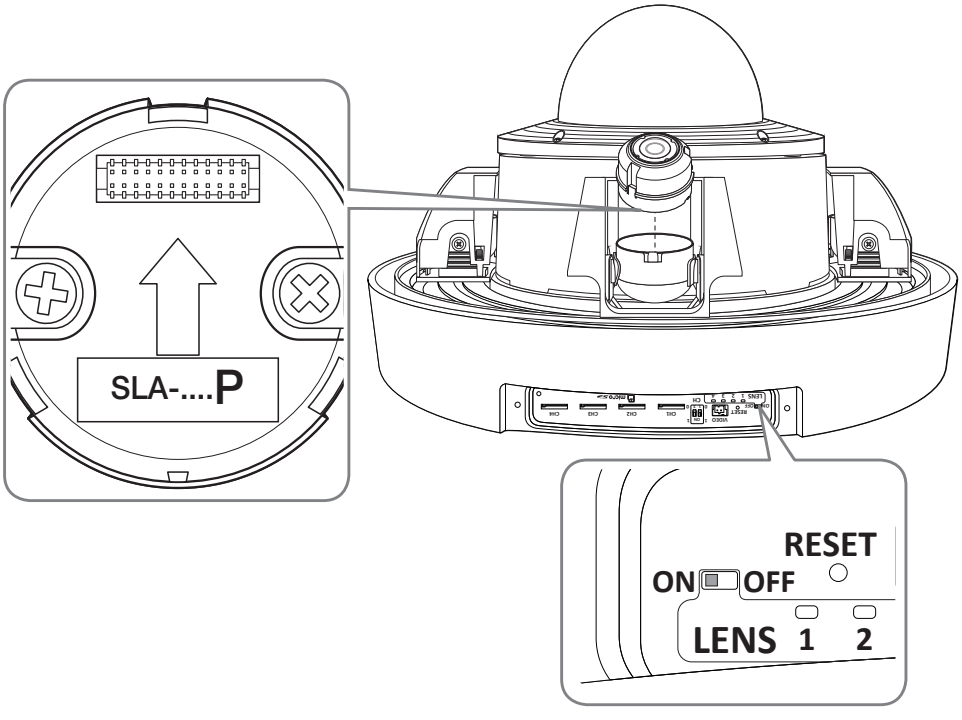

5

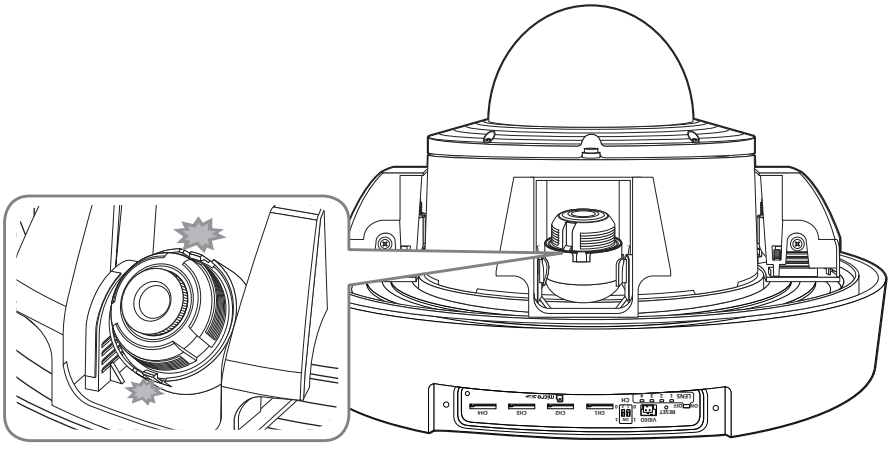

6

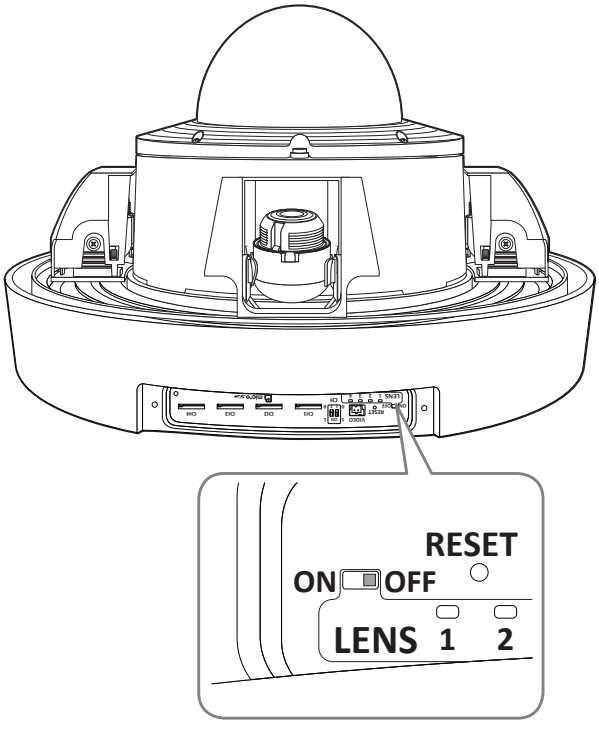

7

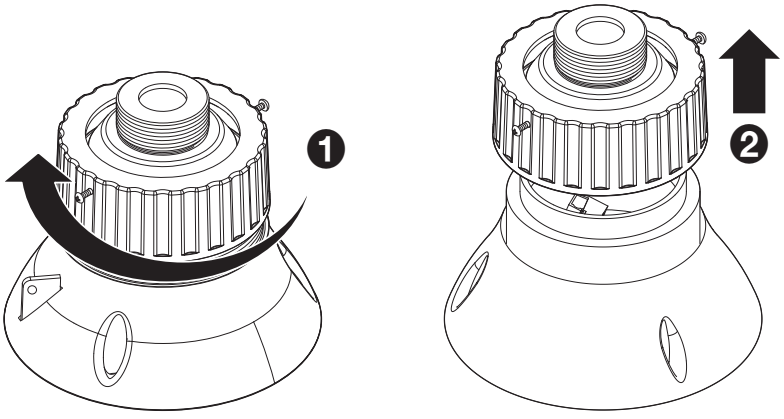

8

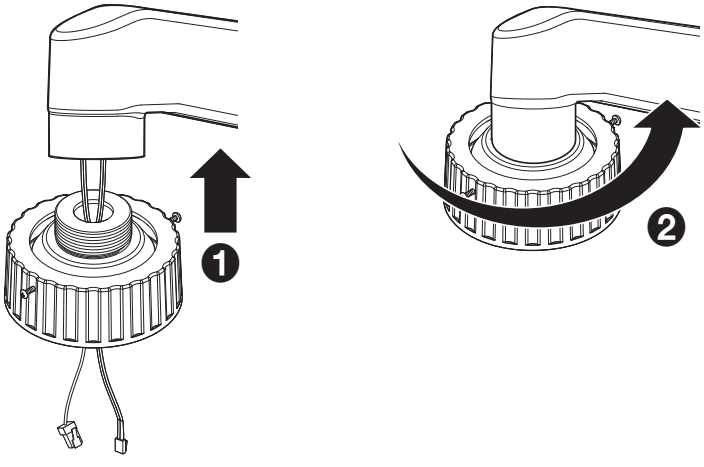

9

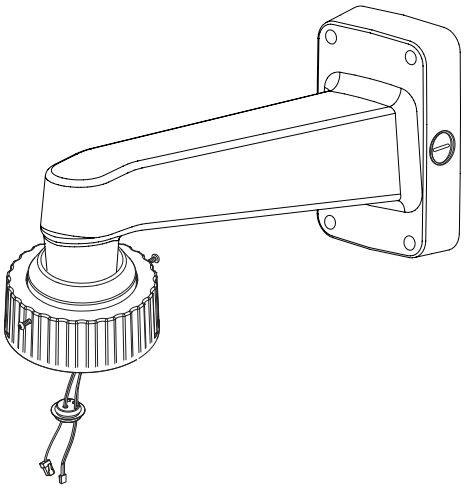

10

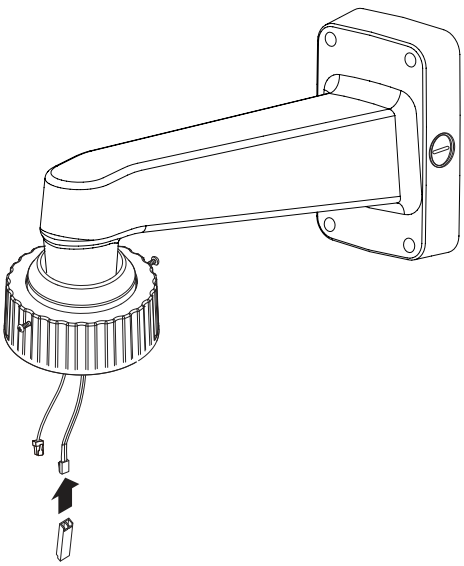

11

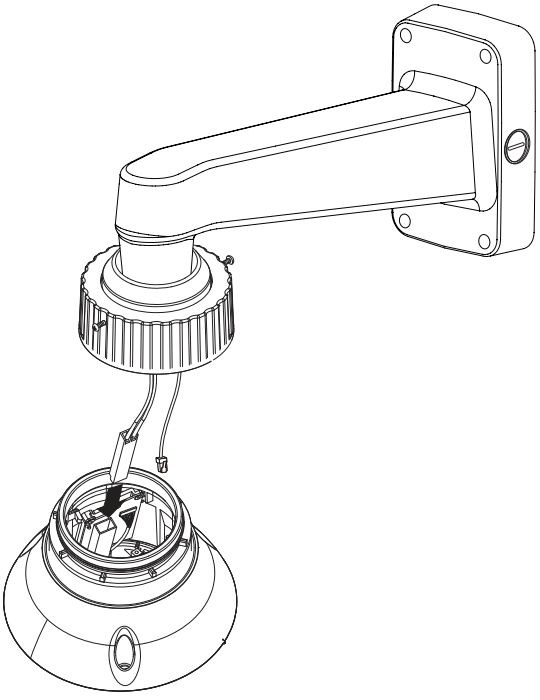

12

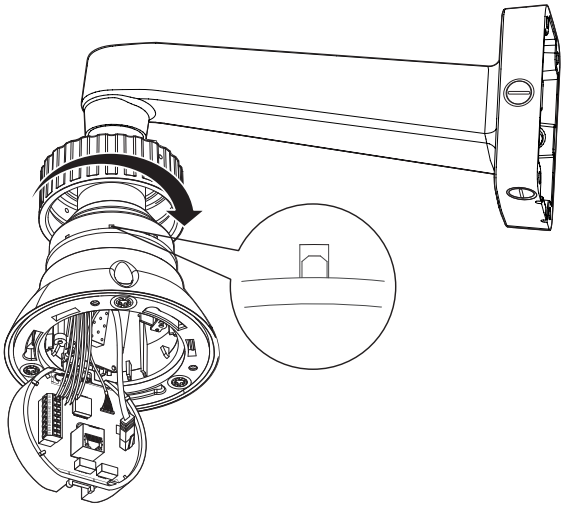

13

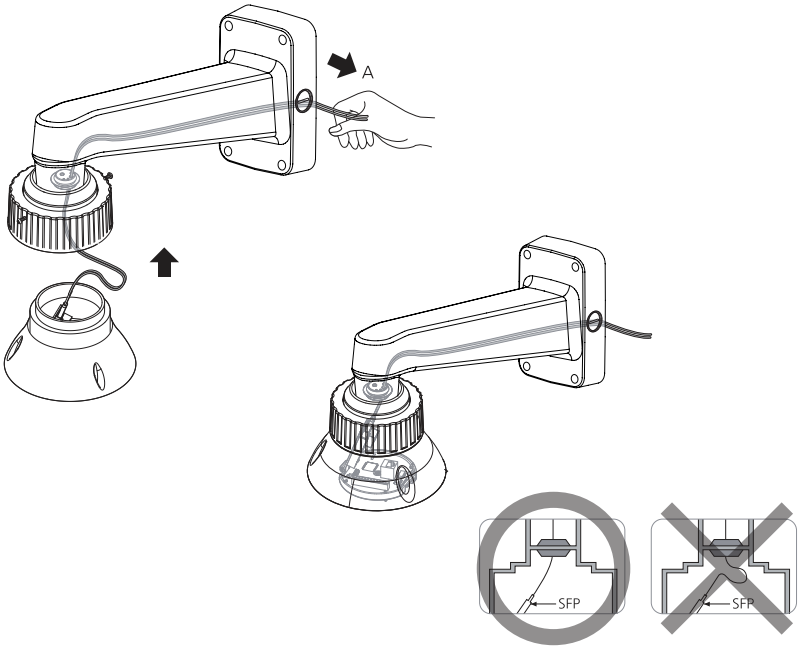

14

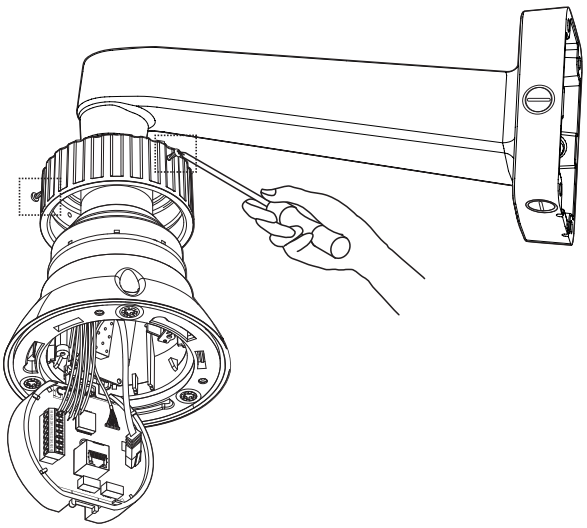

15

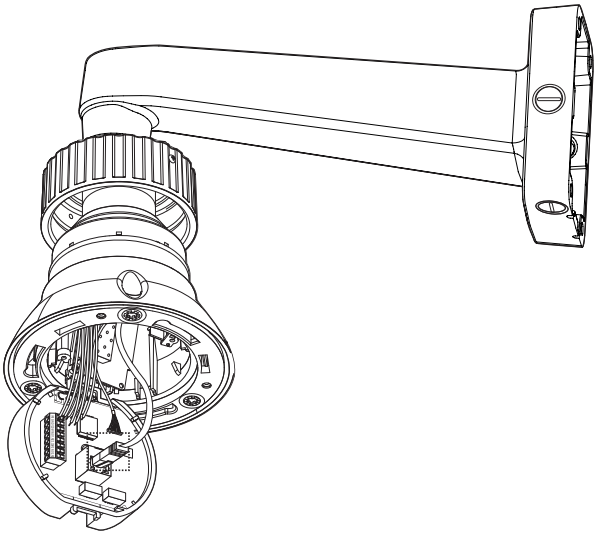

16

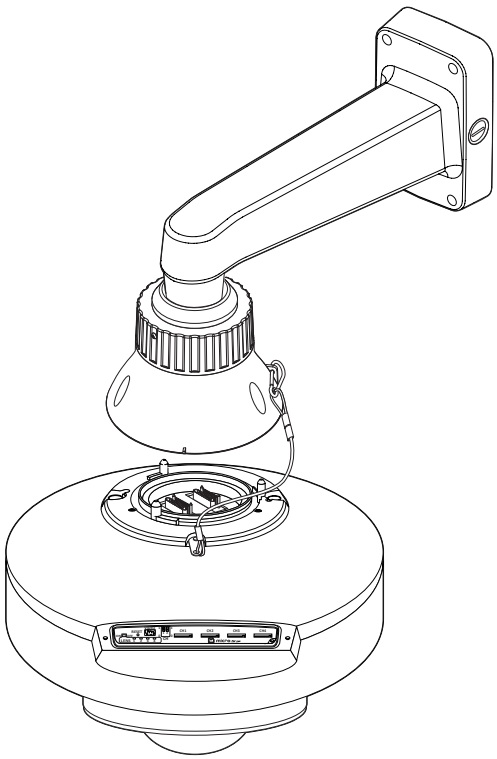

17

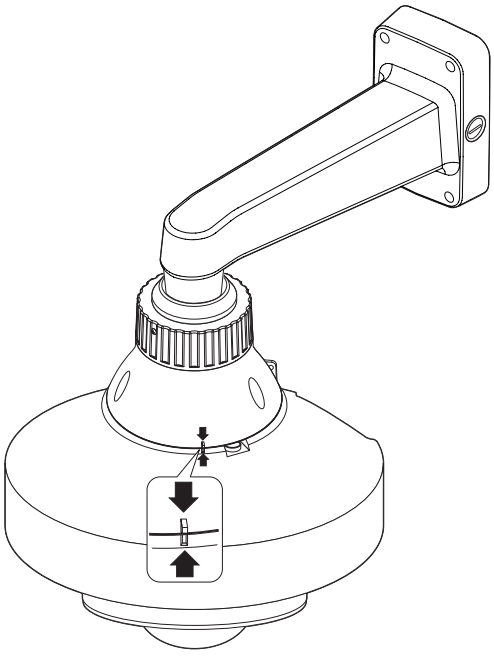

18

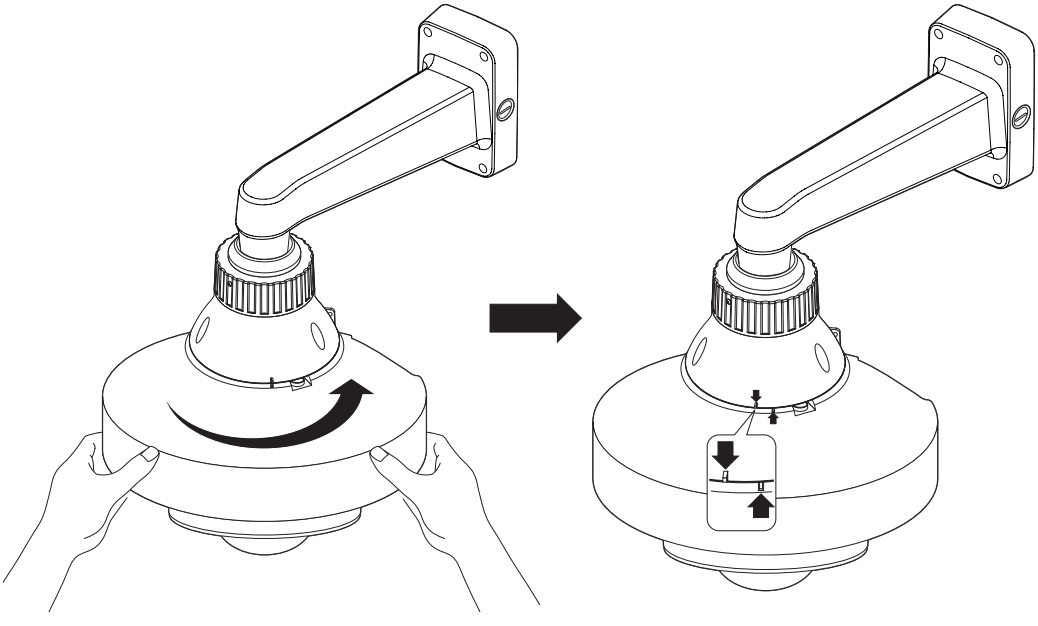

19

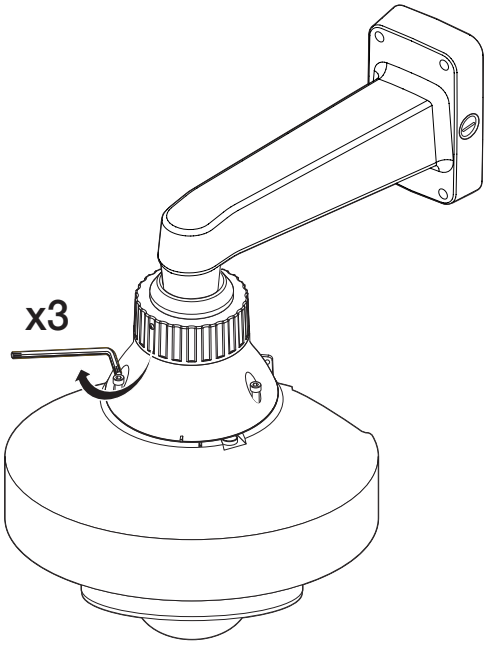

20

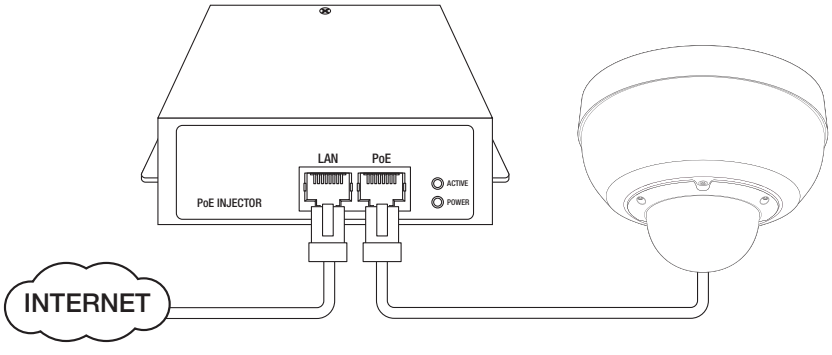

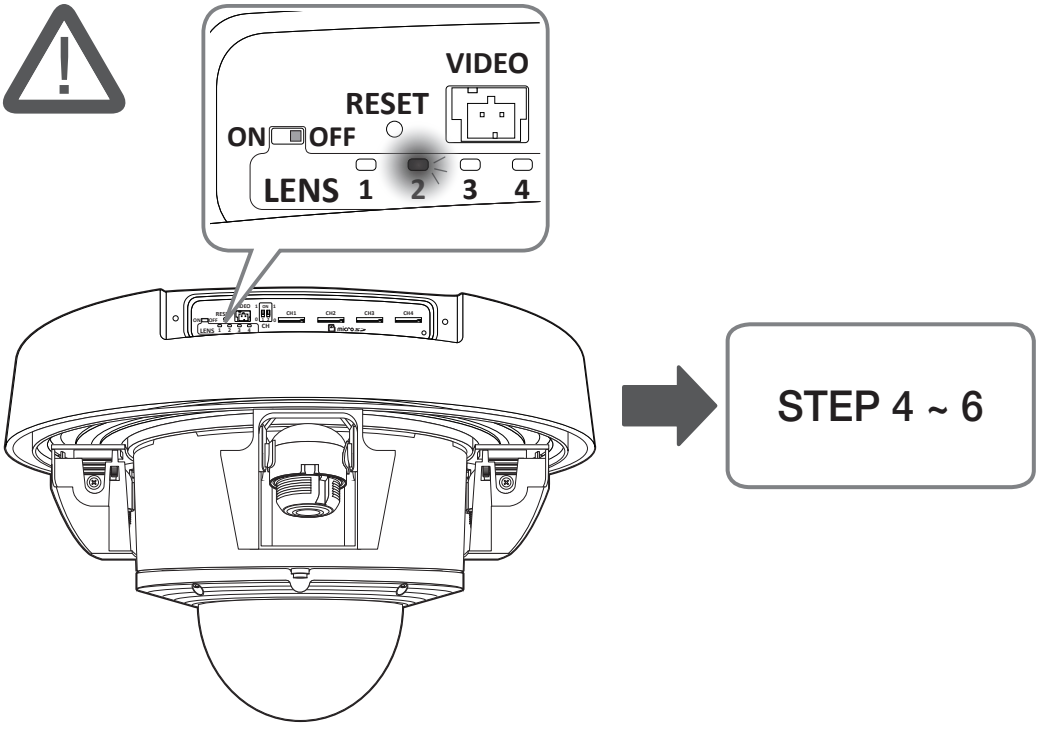
VIDEO
RESET
ON
OFF
LENS
1
2
3
4
STEP 4 ~ 6

21

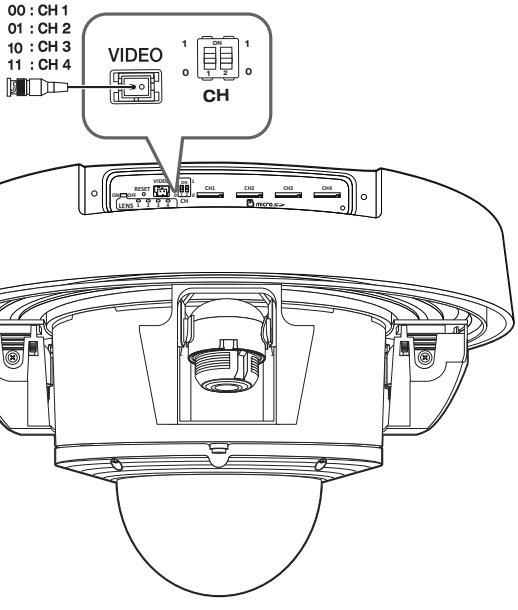
00 : CH 1
01 : CH 2
10 : CH 3
11 : CH 4
VIDEO
CH

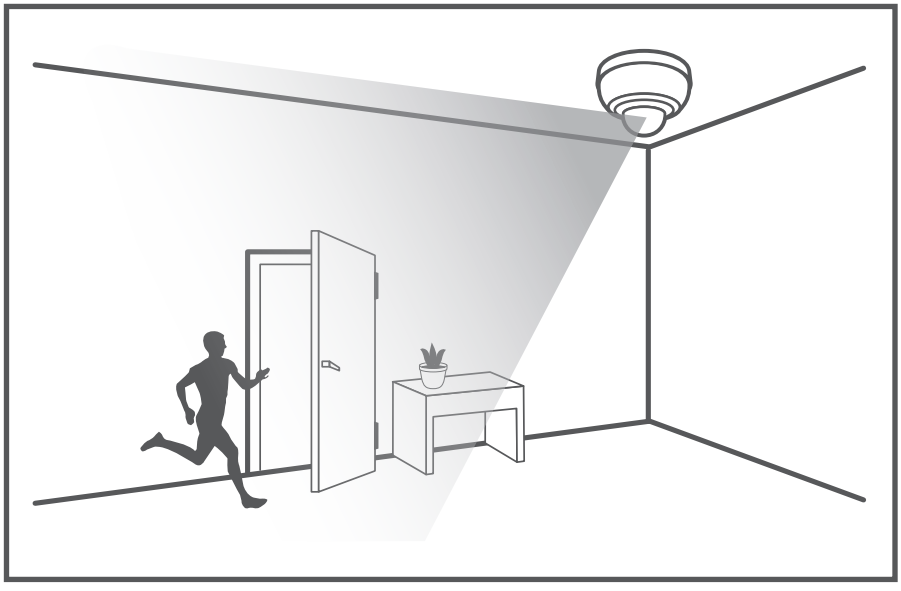

22

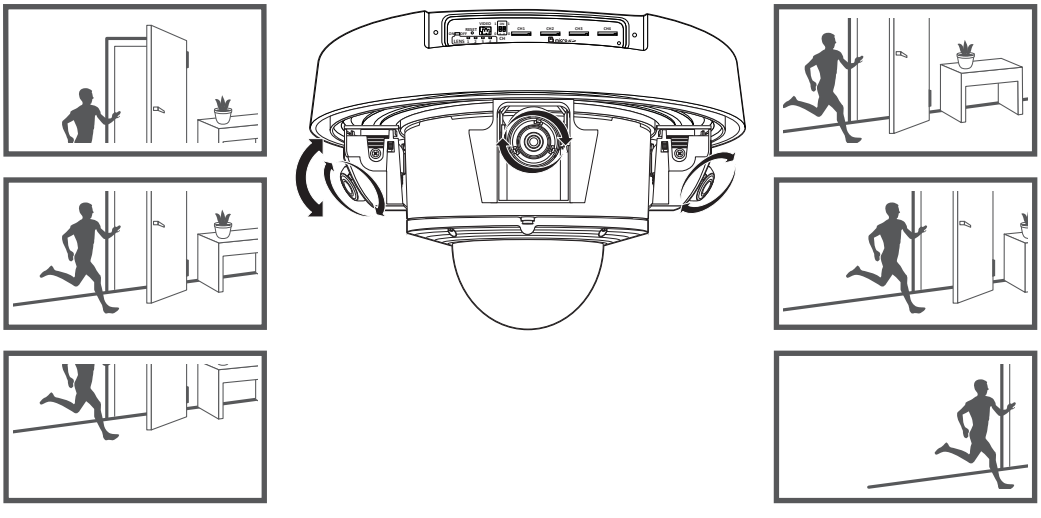

23

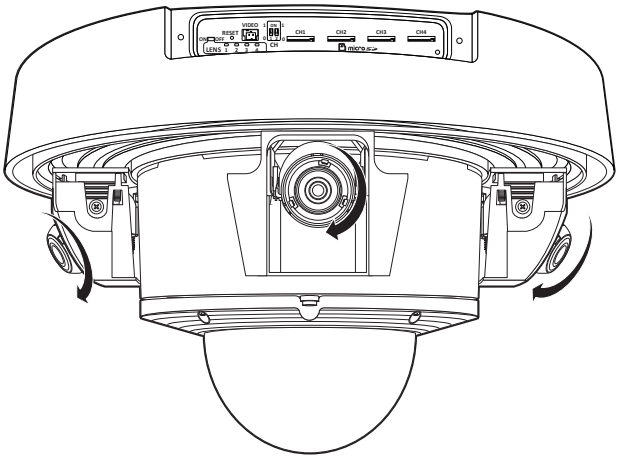

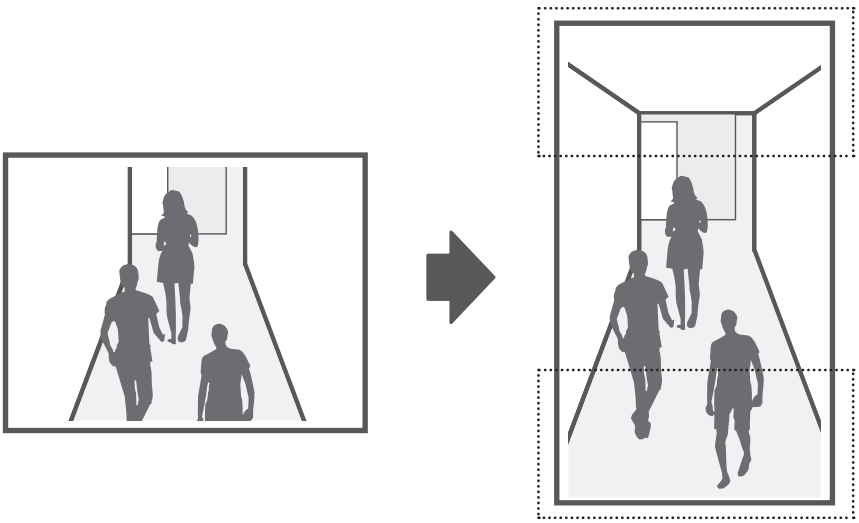

24

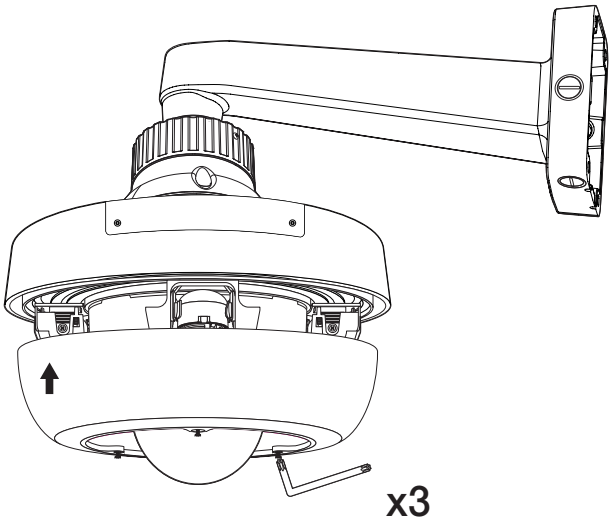

25

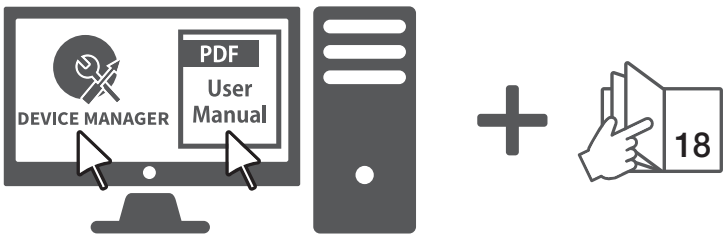

PASSWORD SETTING

When you access the product for the first time, you must register the login password.
When the "**Password change**" window appears, enter the new password.

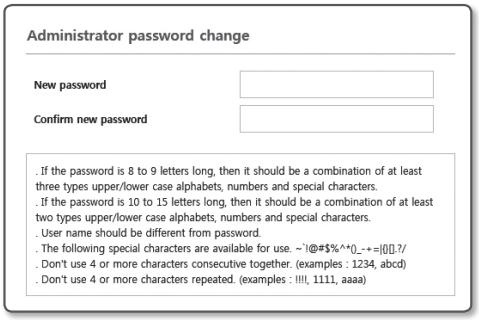

- For a new password with 8 to 9 digits, you must use at least 3 of the following: uppercase/lowercase letters, numbers and special characters. For a password with 10 to 15 digits, you must use at least 2 types of those mentioned.
  - Special characters that are allowed. : ~`!@#$%^*()_-+=|{}[].?/
- For higher security, you are not recommended to repeat the same characters or consecutive keyboard inputs for your passwords.
- If you lost your password, you can press the [**RESET**] button to initialize the product. So, don't lose your password by using a memo pad or memorizing it.

LOGIN

Whenever you access the camera, the login window appears.
Enter the User ID and password to access the camera.

1. Enter "**admin**" in the <**User Name**> input box.
2. Enter the password in the <**Password**> input field.
3. Click [**OK**].

※ **Pan/Tilt/Zoom motors and slip ring are warrantied for one year under continuous operation.**

Hanwha Techwin cares for the environment at all product manufacturing stages, and is taking measures to provide customers with more environmentally friendly products.
The Eco mark represents Hanwha Techwin's devotion to creating environmentally friendly products, and indicates that the product satisfies the EU RoHS Directive.

Correct Disposal of This Product (Waste Electrical & Electronic Equipment)

(Applicable in the European Union and other European countries with separate collection systems)

This marking on the product, accessories or literature indicates that the product and its electronic accessories (e.g. charger, headset, USB cable) should not be disposed of with other household waste at the end of their working life. To prevent possible harm to the environment or human health from uncontrolled waste disposal, please separate these items from other types of waste and recycle them responsibly to promote the sustainable reuse of material resources.

Household users should contact either the retailer where they purchased this product, or their local government office, for details of where and how they can take these items for environmentally safe recycling.

Business users should contact their supplier and check the terms and conditions of the purchase contract. This product and its electronic accessories should not be mixed with other commercial wastes for disposal.

Correct disposal of batteries in this product

(Applicable in the European Union and other European countries with separate battery return systems.)

This marking on the battery, manual or packaging indicates that the batteries in this product should not be disposed of with other household waste at the end of their working life. Where marked, the chemical symbols Hg, Cd or Pb indicate that the battery contains mercury, cadmium or lead above the reference levels in EC Directive 2006/66. If batteries are not properly disposed of, these substances can cause harm to human health or the environment.

To protect natural resources and to promote material reuse, please separate batteries from other types of waste and recycle them through your local, free battery return system.

Head Office
6, Pangyo-ro 319 beon-gil, Bundang-gu, Seongnam-si,
Gyeonggi-do, 463-400 Rep. of KOREA
Tel : +82.70.7147.8753 Fax : +82.31.8018.3740
www.hanwha-security.com

Hanwha Techwin America
500 Frank W. Burr Blvd. Suite 43 Teaneck, NJ 07666
Toll Free +1.877.213.1222 Direct +1.201.325.6920
Fax +1.201.373.0124
www.hanwhasecurity.com

Hanwha Techwin Europe
Heriot House, Heriot Road, Chertsey, Surrey, KT16 9DT, United Kingdom
Tel +44.1932.57.8100 Fax +44.1932.57.8101
www.hanwha-security.eu

Hanwha Techwin(Tianjin) Co.Ltd
No.11, Weiliu Rd., Micro-Electronic Industrial Park, Jingang Road Tianjin 300385, China
Tel : +86.22.2388.7788
www.hanwha-security.cn

Hanwha Techwin Middle East FZE
JAFZA View 18, 20th floor, office 2001, 2002, 2003, Downtown Jebel Ali,
Dubai, United Arab Emirates
http://hanwha-security.com

Hanwha
Techwin