Network

PNM-C16083RQZ

4MP x 4CH AI IR PTRZ Multi-directional Camera

Key Features

- 4MP x 4 Resolution x Ch
- 3.2~10.2mm Focal Length
- 20m IR Length
- Remote PTRZ Easy Setup
- FoV – H: 93°~29° V: 53°~17° /D: 111°~34°
- AI Based Analytics, BestShot support
- TPM 2.0 with FIPS 140-2 level2
- IP66, IK10, NEMA4X rated

Design and specifications are subject to change without notice. The latest product information / specification can be found at HanwhaVision.com
Hanwha Vision is formerly known as Hanwha Techwin.

© Hanwha Vision CO., LTD. All rights reserved.

PNM-C16083RQZ

4MP x 4CH AI IR PTRZ Multi-directional Camera

Specifications

Video

Imaging Device	Size	1/2.8"
	Type	CMOS
Resolution		2592x1520, 1920x1080, 1280x1024, 1280x960, 1280x720, 1024x768, 800x600, 800x448, 720x576, 720x480, 640x480, 640x360
Max. Framerate	H.265/H.264	30fps/25fps(60Hz/50Hz)
	MJPEG	30fps(@4MP Max. 5fps)
Min. Illumination (Lux)	Color(1/30sec, 30IRE)	0.1
	BW(1/30sec, 30IRE)	0.01

Lens

Focal Length (mm)		3.2~10.2
Zoom Ratio	Optical	3.2x
Max Aperture Ratio (F number)	Wide	1.6
	Tele	3.1
Angular Field of View	Horizontal	93°~29°
	Vertical	53°~17°
	Diagonal	111°~34°
Min. Object Distance		1.2m(3.93ft)
Focus Control		Simple focus
Lens Type		P iris

Pan / Tilt / Rotate

Pan / Tilt / Rotate Range	Pan	0°~360°
	Tilt	30°~90°
	Rotate	0°~90°
	Others	Remote adjustment(Max. 200cycles)

Operational

Day & Night	Auto(ICR)
Backlight Compensation	BLC, WDR, SSDR

Design and specifications are subject to change without notice. The latest product information / specification can be found at HanwhaVision.com
Hanwha Vision is formerly known as Hanwha Techwin.

© Hanwha Vision CO., LTD. All rights reserved.

Operational

Wide Dynamic Range (dB)		120
Digital Noise Reduction		WiseNR II (Based on AI engine), SSNR V
Defog		Support
Motion Detection	Quantity	8ea
	Shape	8point Polygonal zones
Privacy Masking	Quantity	6ea
	Shape	4point Quadrangle zones
	Color / Option	Gray, Black, White
Gain Control		Low, Middle, High
White Balance		ATW, AWC, Manual, Indoor, Outdoor
LDC		Support
Electronic Shutter	Mode	Minimum, Maximum, Anti flicker, Prefer shutter control(Based on AI engine)
	Speed Range	1/5~1/12,000sec
Video Rotation		Flip, Mirror, Hallway view(90°/270°) - Each channel separately
Alarm Interface	In/Out	2 configurable I/O ports
	Others	Support extra alarm I/O via optional I/O box
Alarm Triggers		Analytics, Network disconnect, Alarm input, App event, Time schedule, MQTT subscription, Case tampering
Alarm Events When Alarm Trigger Occurred		File upload(image): e-mail/FTP, Notification: e-mail, Recording: SD/SDHC/SDXC or NAS recording at event triggers,Alarm output, Handover: PTZ preset,send message by HTTP/HTTPS/TCP, MQTT: publication
Audio In		Support via optional I/O box
Audio Out		Support via optional I/O box
Light Type		IR LED
Light Viewable Length	IR	WiseIR: PoE++ 20m(65.62ft) / PoE+ 15m(49.21ft)
IR Wavelength		850nm

Analytics

Classified Object Type		Person, Face, Vehicle, License plate
Attributes	Person	Upper/Lower clothes color
	Vehicle	Type(car, bus, truck, motorcycle, bicycle), Color
Thumbnail		BestShot
Analytics Events	Based on AI Engine	Object detection, Virtual line(Crossing/Direction), Virtual area(Loitering/Intrusion/Enter/Exit)
	Normal	Defocus detection, Motion detection, Tampering, Audio detection, Sound classification, Virtual area(Appear/Disappear)

Design and specifications are subject to change without notice. The latest product information / specification can be found at HanwhaVision.com
Hanwha Vision is formerly known as Hanwha Techwin.

© Hanwha Vision CO., LTD. All rights reserved.

Network

Ethernet		Metal shielded RJ-45(10/100/1000BASE-T)
Video Compression		H.265/H.264: Main/High, MJPEG
Smart Codec		Manual, WiseStreamIII
Bitrate Control		H.265/H.264: CBR or VBR, MJPEG: VBR, MJPEG: VBR
Streaming	Unicast	Up to 10 users
	Multicast	Support
	Multiple Streaming	Up to 3 profiles
Protocol		IPv4, IPv6, TCP/IP, UDP/IP, RTP(UDP), RTP(TCP), RTCP, RTSP, NTP, HTTP, HTTPS, SSL/TLS, DHCP, FTP, SMTP, ICMP, IGMPv2, SNMPv1/v2c/v3(MIB-2), ARP, DNS, DDNS, QoS, UPnP, Bonjour, LLDP, CDP, SRTP(TCP, UDP Unicast), MQTT
Application Programming Interface	ONVIF	S, G, T, M
	Others	SUNAPI(HTTP API), Hanwha Vision Open Platform

Security

OS / Firmware Protect	Encrypted firmware, Secure boot, Signed firmware
User authentication	Digest authentication
Network authentication	IEEE 802.1X(EAP-TLS, EAP-LEAP, EAP-PEAP, MSCHAPv2)
Secure Communication	HTTPS, WSS(WebSocket Secure)
Access Control	IP-based access control
Data Protect	Encryption credentials, Encrypt compress for live recording file export
Audit	Access / System / Event Log management
Device ID	Device certificate(Hanwha Vision Root CA)
Secure Storage	TPM(Trusted platform module), SDcard partition encrypt(AES-256)
Security Certificate	TPM 2.0 with FIPS 140-2 level2, Consumer IoT Security Standard (ETSI EN 303 645), Security Built-in Process Certification (IEC 62443-4-1)

General

SoC	Type	CV5
Memory	RAM	8GB
	Flash	8GB
Edge Storage	Micro SD/SDHC/SDXC	Max. 512GB x 2slot(Total 1TB)
Edge Storage(OnCloud)	Micro SD/SDHC/SDXC	Max. 1TB x 2slots (Total 2TB) *Hanwha Vision branded microSD cards have been certified and recommended for OnCloud edge recording.

Environmental & Electrical

Operating Condition	Temperature	-40°C~+55°C(-40°F~+131°F)
	Humidity	0~100% RH(condensing)
	Others	Start up should be done at above -35°C, Humidity control with AIR vent

Design and specifications are subject to change without notice. The latest product information / specification can be found at HanwhaVision.com
Hanwha Vision is formerly known as Hanwha Techwin.

© Hanwha Vision CO., LTD. All rights reserved.

Environmental & Electrical

Storage Condition	Temperature	-50°C~+60°C(-58°F~+140°F)
	Humidity	0~90% RH(non-condensing)
EPA(Effective Projected Area)		0.035㎡
Input Voltage		PoE+(IEEE802.3at, Class4), PoE++(IEEE802.3bt type3, Class6)
Power Consumption	PoE	Max. 41W, typical 22W
	Others	PoE+: Max. 25.5W, typical 22W

Mechanical

Color	White
Material	Aluminum, PC(Polycarbonate), Hard-coated dome
RAL Code	RAL9003
Product Dimensions	ø312.7x145.9mm(ø12.31x5.74")
Product Weight	4,400g(9.7lb)
Compatible Conduit Hole	19.1mm(3/4")(M25)
Compatible Gang Box	Single, Double, 4" Octagon, Square

Certifications & Standards

EMC	FCC 47 CFR 15 Subpart B Class A, ICES-3(A)/NMB-3(A), CE/UKCA - EN55032 Class A, EN 50130-4, EN 61000-3-2, EN 61000-3-3, VCCI CISPR 32 Class A, RCM AS-NZS CISPR 32 Class A, KS C 9832 Class A, KS C 9835
Safety	UL 62368-1, CAN/CSA C22.2 NO. 62368-1, IEC 62471
Environment	IEC/EN 63000, IEC 60529 IP66, IEC 62262 IK10, NEMA 250 type 4X

DORI (EN62676-4 standard)

Detect (25PPM/ 8PPF)	Wide	49.2m(161.40ft)
	Tele	200.5m(657.65ft)
Observe (63PPM/ 19PPF)	Wide	19.7m(64.56ft)
	Tele	80.2m(263.06ft)
Recognize (125PPM/ 38PPF)	Wide	9.8m(32.28ft)
	Tele	40.1m(131.53ft)
Identify (250PPM/ 76PPF)	Wide	4.9m(16.14ft)
	Tele	20.0m(65.76ft)

Design and specifications are subject to change without notice. The latest product information / specification can be found at HanwhaVision.com
Hanwha Vision is formerly known as Hanwha Techwin.

© Hanwha Vision CO., LTD. All rights reserved.

PNM-C16083RQZ

4MP x 4CH AI IR PTRZ Multi-directional Camera

CAD

Unit: mm [inch]

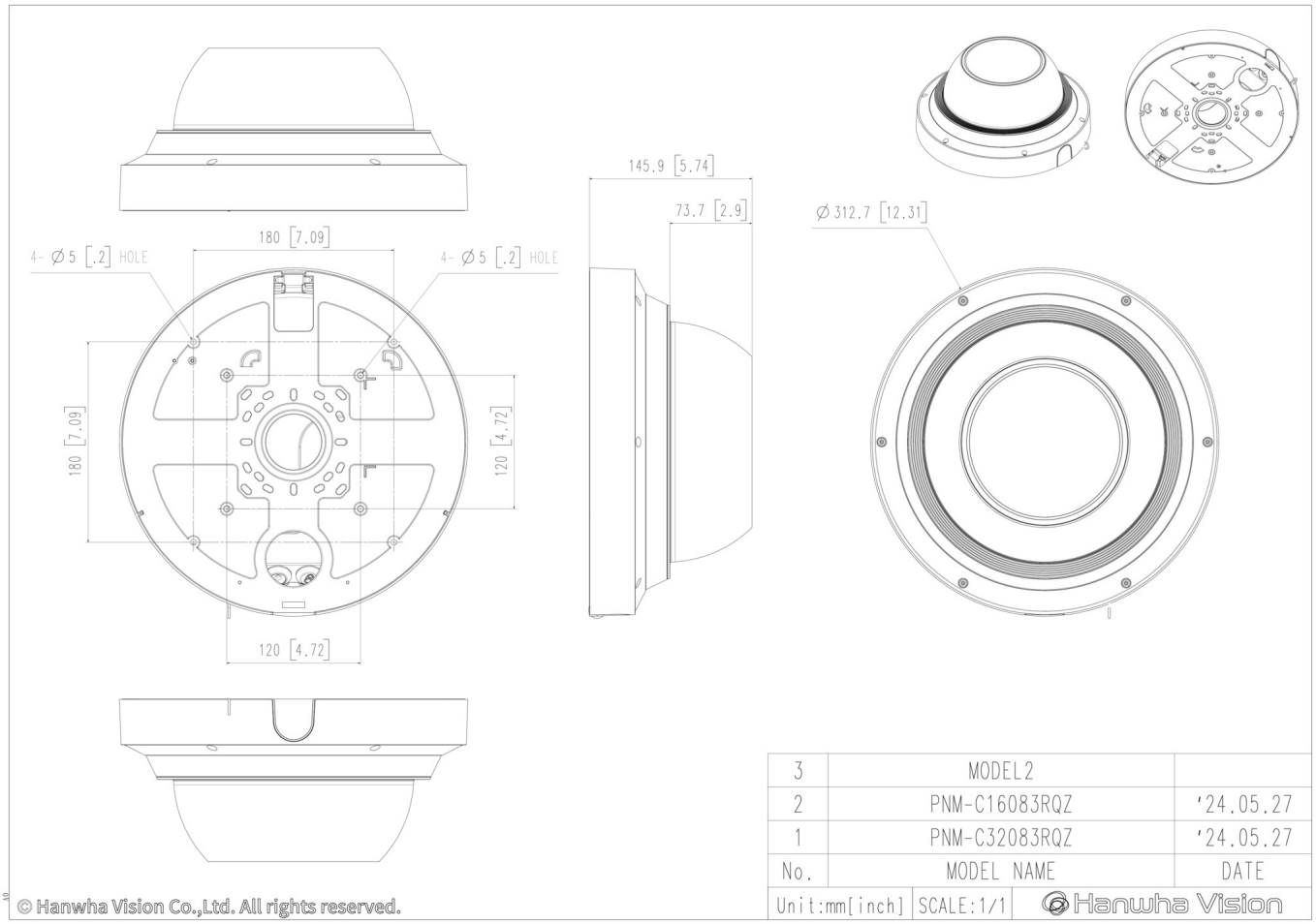

Design and specifications are subject to change without notice. The latest product information / specification can be found at HanwhaVision.com
Hanwha Vision is formerly known as Hanwha Techwin.

© Hanwha Vision CO., LTD. All rights reserved.

Compatible Devices

SBP-315C

SBP-315HMW

SBP-140CMB

SBP-180CMB

SBP-180CMS

SBP-150CMI

SBP-150CMP

SBP-150NBW

SBP-150PMW

SBP-300CMP

SBP-300CMI

SBP-300CMTS

SBP-300CMTW

SBP-300CMW1

SBP-900CMP

SBP-900CMW

SBP-300BW1

SBP-C15P

SBP-250WMW

SBP-400WMW

SBP-115PFA

SBP-300PMW2

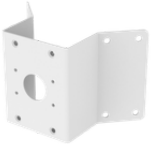

SBP-300KMW1

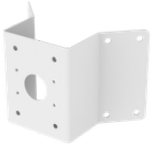

SBP-156KMW

SBP-156LMW1

SBP-300LMW

SBP-300NBW

Design and specifications are subject to change without notice. The latest product information / specification can be found at HanwhaVision.com
Hanwha Vision is formerly known as Hanwha Techwin.

© Hanwha Vision CO., LTD. All rights reserved.