Network

PNM-C19183RVTP

5MP 3CH fixed + 4MP 18x PTZ AI Camera

Key Features

- 5MP x 3CH Multisensor
- 4MP 18x PTZ
- 15m IR Length
- IK10 Rated
- 4MP x 18x PTZ
- AI Based Analytics and Business Intelligence
- Auto calibration
- Supports Smart Zoom (Advanced Handover)
- WiseStream (Based on AI engine)

Design and specifications are subject to change without notice. The latest product information / specification can be found at HanwhaVision.com
Hanwha Vision is formerly known as Hanwha Techwin.

© Hanwha Vision CO., LTD. All rights reserved.

PNM-C19183RVTP

5MP 3CH fixed + 4MP 18x PTZ AI Camera

Specifications

Video		Ch 1	Ch 2	Ch 3	PTZ
Imaging Device	Size	1/2.8"			
	Type	CMOS			
Resolution		2592x1944, 2560x1440, 1920x1080, 1280x960, 1280x720, 800x600, 800x448, 720x576, 720x480, 640x480, 640x360, 320x240	2592x1944, 2560x1440, 1920x1080, 1280x960, 1280x720, 800x600, 800x448, 720x576, 720x480, 640x480, 640x360, 320x240	2592x1944, 2560x1440, 1920x1080, 1280x960, 1280x720, 800x600, 800x448, 720x576, 720x480, 640x480, 640x360, 320x240	2592x1520, 2560x1440, 1920x1080, 1280x1024, 1280x960, 1280x720, 1024x768, 800x600, 800x448, 720x576, 720x480, 640x480, 640x360, 320x240
Max. Framerate	H.265/H.264	30fps	30fps	30fps	30fps
	MJPEG	30fps(@5MP Max. 5fps)	30fps(@5MP Max. 5fps)	30fps(@5MP Max. 5fps)	30fps(@4MP Max. 5fps)
Min. Illumination (Lux)	Color(1/30sec, 30IRE)	0.08	0.08	0.08	0.05
	BW(1/30sec, 30IRE)	0.008	0.008	0.008	0.005
Video Out		USB: USB Type C. Preview and installation ONLY. Requires WiFi dongle.			

Lens

Focal Length (mm)		2.4	2.4	2.4	5.42~98.29
Zoom Ratio	Optical				18x
	Digital				32x
Max Aperture Ratio (F number)	Wide	2.0	2.0	2.0	2.0
	Tele				3.27
Angular Field of View	Horizontal	123°	123°	123°	53.1°~3.39°
	Vertical	91°	91°	91°	31.75°~1.98°
	Diagonal	159°	159°	159°	60.8°~3.92°
Min. Object Distance		0.5m(1.64ft)	0.5m(1.64ft)	0.5m(1.64ft)	5.0m(16.4ft)
Focus Control		Fixed	Fixed	Fixed	Oneshot AF, Focus save
Lens Type		Fixed iris	Fixed iris	Fixed iris	Adaptive P iris

Pan / Tilt / Rotate

Pan Speed	Preset				Max. 600°/sec
	Manual				0.024°/sec~250°/sec

Design and specifications are subject to change without notice. The latest product information / specification can be found at HanwhaVision.com
Hanwha Vision is formerly known as Hanwha Techwin.

© Hanwha Vision CO., LTD. All rights reserved.

Pan / Tilt / Rotate

Tilt Speed	Preset				Max. 500°/sec
	Manual				0.024°/sec~250°/sec
Sequence					Preset(300ea), Swing, Group(6ea), Trace, Tour, Auto Run, Schedule
Preset Accuracy					±0.2°

Operational

Direction Indicator					Support
Day & Night		Auto(ICR)			
Backlight Compensation		BLC, WDR, SSDR	BLC, WDR, SSDR	BLC, WDR, SSDR	BLC, HLC, WDR, SSDR
Wide Dynamic Range (dB)		120			
Digital Noise Reduction		WiseNR II (Based on AI engine), SSNR V			
Digital Image Stabilization					Support
Defog		Support			
Motion Detection	Quantity	8ea			
	Shape	8point Polygonal zones			
Privacy Masking	Quantity	12ea	12ea	12ea	32ea
	Shape	4point Quadrangle zones	4point Quadrangle zones	4point Quadrangle zones	4point Quadrangle zones
	Color / Option	Gray, Green, Red, Blue, Black, White	Gray, Green, Red, Blue, Black, White	Gray, Green, Red, Blue, Black, White	Gray, Green, Red, Blue, Black, White, Mosaic
Gain Control		Low, Middle, High	Low, Middle, High	Low, Middle, High	Off, Max gain, Manual
White Balance		ATW, AWC, Manual, Indoor, Outdoor	ATW, AWC, Manual, Indoor, Outdoor	ATW, AWC, Manual, Indoor, Outdoor	ATW, NarrowATW, AWC, Manual, Indoor, Outdoor, Mercury, Sodium
LDC		Support	Support	Support	
Electronic Shutter	Mode	Minimum, Maximum, Anti flicker, Prefer shutter control(Based on AI engine)			
	Speed Range	1/5~1/12,000sec			
Video Rotation					Flip, Mirror
Alarm Interface	Others	Support alarm I/O via optional I/O box			
Alarm Triggers		Analytics, Network disconnect, Alarm input, App event, Time schedule, MQTT subscription			
Alarm Events When Alarm Trigger Occurred		File upload(image): e-mail/FTP, Notification: e-mail, Recording: SD/SDHC/SDXC or NAS recording at event triggers,Alarm output, MQTT: publication,Smart zoom			
Audio In		Support via optional I/O box			
Audio Out		Support via optional I/O box			
Light Type		IR LED	IR LED	IR LED	

Design and specifications are subject to change without notice. The latest product information / specification can be found at HanwhaVision.com
Hanwha Vision is formerly known as Hanwha Techwin.

© Hanwha Vision CO., LTD. All rights reserved.

Operational

Light Viewable Length	IR	15m(49.21ft), 10m(32.8ft) under 3m height installation	15m(49.21ft), 10m(32.8ft) under 3m height installation	15m(49.21ft), 10m(32.8ft) under 3m height installation	
IR Wavelength		850nm	850nm	850nm	
Auto Tracking					Object auto tracking(Person/Vehicle), Target lock tracking

Analytics

Classified Object Type		Person, Face, Vehicle, License plate			
Attributes	Person	Upper/Lower clothes color	Upper/Lower clothes color	Upper/Lower clothes color	
	Vehicle	Type(car, bus, truck, motorcycle, bicycle), Color	Type(car, bus, truck, motorcycle, bicycle), Color	Type(car, bus, truck, motorcycle, bicycle), Color	Type(car, bus, truck, motorcycle, bicycle)
Thumbnail		BestShot	BestShot	BestShot	DetectionShot
Analytics Events	Based on AI Engine	Object detection, Virtual line(Crossing/Direction), Virtual area(Loitering/Intrusion/Enter/Exit), Motion detection	Object detection, Virtual line(Crossing/Direction), Virtual area(Loitering/Intrusion/Enter/Exit), Motion detection	Object detection, Virtual line(Crossing/Direction), Virtual area(Loitering/Intrusion/Enter/Exit), Motion detection	Object detection, Virtual line(Crossing/Direction), Virtual area(Loitering/Intrusion/Enter/Exit), Motion detection
	Normal	Tampering, Audio detection, Virtual area(Appear/Disappear)	Tampering, Audio detection, Virtual area(Appear/Disappear)	Tampering, Audio detection, Virtual area(Appear/Disappear)	Tampering, Fog detection, Audio detection
Business Intelligence	Based on AI Engine	People counting, Queue management, Heatmap, Vehicle counting	People counting, Queue management, Heatmap, Vehicle counting	People counting, Queue management, Heatmap, Vehicle counting	

Network

Ethernet		Metal shielded RJ-45(10/100/1000BASE-T)			
Video Compression		H.265/H.264: Main/Baseline/High, MJPEG			
Smart Codec		Manual, WiseStream(Based on AI engine)	Manual, WiseStream(Based on AI engine)	Manual, WiseStream(Based on AI engine)	Manual, WiseStream II
Bitrate Control		H.265/H.264: CBR or VBR, MJPEG: VBR			
Streaming	Unicast	Up to 5 users	Up to 5 users	Up to 5 users	Up to 5 users
	Multicast	Support	Support	Support	Support
	Multiple Streaming	Up to 4 profiles	Up to 4 profiles	Up to 4 profiles	Up to 3 profiles
Protocol		IPv4, IPv6, TCP/IP, UDP/IP, RTP(UDP), RTP(TCP), RTCP, RTSP, NTP, HTTP, HTTPS, SSL/TLS, DHCP, FTP, ICMP, IGMPv2, SNMPv1/v2c/v3(MIB-2), ARP, DNS, DDNS, QoS, UPnP, Bonjour, LLDP, CDP, SRTP(TCP, UDP Unicast), MQTT, SMTP(StartTLS)			
Application Programming Interface	ONVIF	S, G, T, M			
	Others	SUNAPI(HTTP API), Hanwha Vision Open Platform			
Direct Cloud Connection		Support			

Design and specifications are subject to change without notice. The latest product information / specification can be found at HanwhaVision.com
Hanwha Vision is formerly known as Hanwha Techwin.

© Hanwha Vision CO., LTD. All rights reserved.

Security

OS / Firmware Protect	Encrypted firmware, Secure boot, Signed firmware
User authentication	Digest authentication, Prevent brute-force attack
Network authentication	IEEE 802.1X(EAP-TLS, EAP-LEAP, EAP-PEAP, MSCHAPv2)
Secure Communication	HTTPS, WSS(WebSocket Secure), SRTP
Access Control	IP-based access control
Data Protect	Encryption credentials, Encrypt compress for live recording file export
Audit	Access / System / Event Log management
Device ID	Device certificate(Hanwha Vision Root CA)
Secure Storage	SDcard partition encrypt(AES-256), Secure element
Supply Chain Security	SBOM
Security Certificate	Secure element(FIPS 140-3 level3, CC EAL6+), Consumer IoT Security Standard (ETSI EN 303 645), Security Built-in Process Certification (IEC 62443-4-1)

General

SoC	Type	Wisenet 7 + NT98690			
Memory	RAM	8GB	8GB	8GB	4GB
	Flash	8GB	8GB	8GB	512MB
Edge Storage	Micro SD/SDHC/SDXC	Max. 1TB x 2slot(Total 2TB)			
Edge Storage(OnCloud)	Micro SD/SDHC/SDXC	Max. 1TB x 2slots (Total 2TB) *Hanwha Vision branded microSD cards have been certified and recommended for OnCloud edge recording.			

Environmental & Electrical

Operating Condition	Temperature	-40°C~+55°C(-40°F~+131°F)
	Humidity	0~100% RH(condensing)
	Others	Start up should be done at above -35°C, Humidity control with AIR vent
Storage Condition	Temperature	-50°C~+60°C(-58°F~+140°F)
	Humidity	0~90% RH(non-condensing)
EPA(Effective Projected Area)		0.038㎡
Input Voltage		PoE++(IEEE802.3bt type3, Class6)
Power Consumption	PoE	42W

Mechanical

Color		White
Material		Aluminum, Hard-coated dome
Material Management	Declaration	RoHS(EU RoHS directive 2011/65/EU and IEC/EN 63000:2018), REACH(Regulation (EC) No. 1907/2006), Conflict mineral policy(Section 1502 of US Dodd Frank Act)
RAL Code		RAL9003

Design and specifications are subject to change without notice. The latest product information / specification can be found at HanwhaVision.com
Hanwha Vision is formerly known as Hanwha Techwin.

© Hanwha Vision CO., LTD. All rights reserved.

Mechanical

Product Dimensions	ø251.4x212mm(ø9.9x8.35")
Product Weight	4,800g(10.58lb)
Compatible Conduit Hole	19.1mm(3/4")(M25)
Compatible Gang Box	Single, Double, 4" Octagon, Square

Certifications & Standards

EMC	FCC 47 CFR 15 Subpart B Class A, ICES-3(A)/NMB-3(A), CE/UKCA - EN55032 Class A, EN 50130-4, EN 61000-3-2, EN 61000-3-3, VCCI CISPR 32 Class A, RCM AS-NZS CISPR 32 Class A, KS C 9832 Class A, KS C 9835
Safety	UL 62368-1, CAN/CSA C22.2 NO. 62368-1, IEC 62471
Environment	IEC 60529 IP66, IEC 62262 IK10, NEMA 250 type 4X

DORI (EN62676-4 standard)

Detect (25PPM/ 8PPF)	Wide	28.1m(92.35ft)	28.1m(92.35ft)	28.1m(92.35ft)	103.7m(340.38ft)
	Tele				1751.8m(5474.46ft)
Observe (63PPM/ 19PPF)	Wide	11.3m(36.94ft)	11.3m(36.94ft)	11.3m(36.94ft)	41.5m(136.15ft)
	Tele				700.7m(2298.99ft)
Recognize (125PPM/ 38PPF)	Wide	5.6m(18.47ft)	5.6m(18.47ft)	5.6m(18.47ft)	20.7m(68.08ft)
	Tele				350.4m(1149.49ft)
Identify (250PPM/ 76PPF)	Wide	2.8m(9.23ft)	2.8m(9.23ft)	2.8m(9.23ft)	10.4m(34.04ft)
	Tele				175.2m(574.75ft)

Design and specifications are subject to change without notice. The latest product information / specification can be found at HanwhaVision.com
Hanwha Vision is formerly known as Hanwha Techwin.

© Hanwha Vision CO., LTD. All rights reserved.

PNM-C19183RVTP

5MP 3CH fixed + 4MP 18x PTZ AI Camera

CAD

Unit: mm [inch]

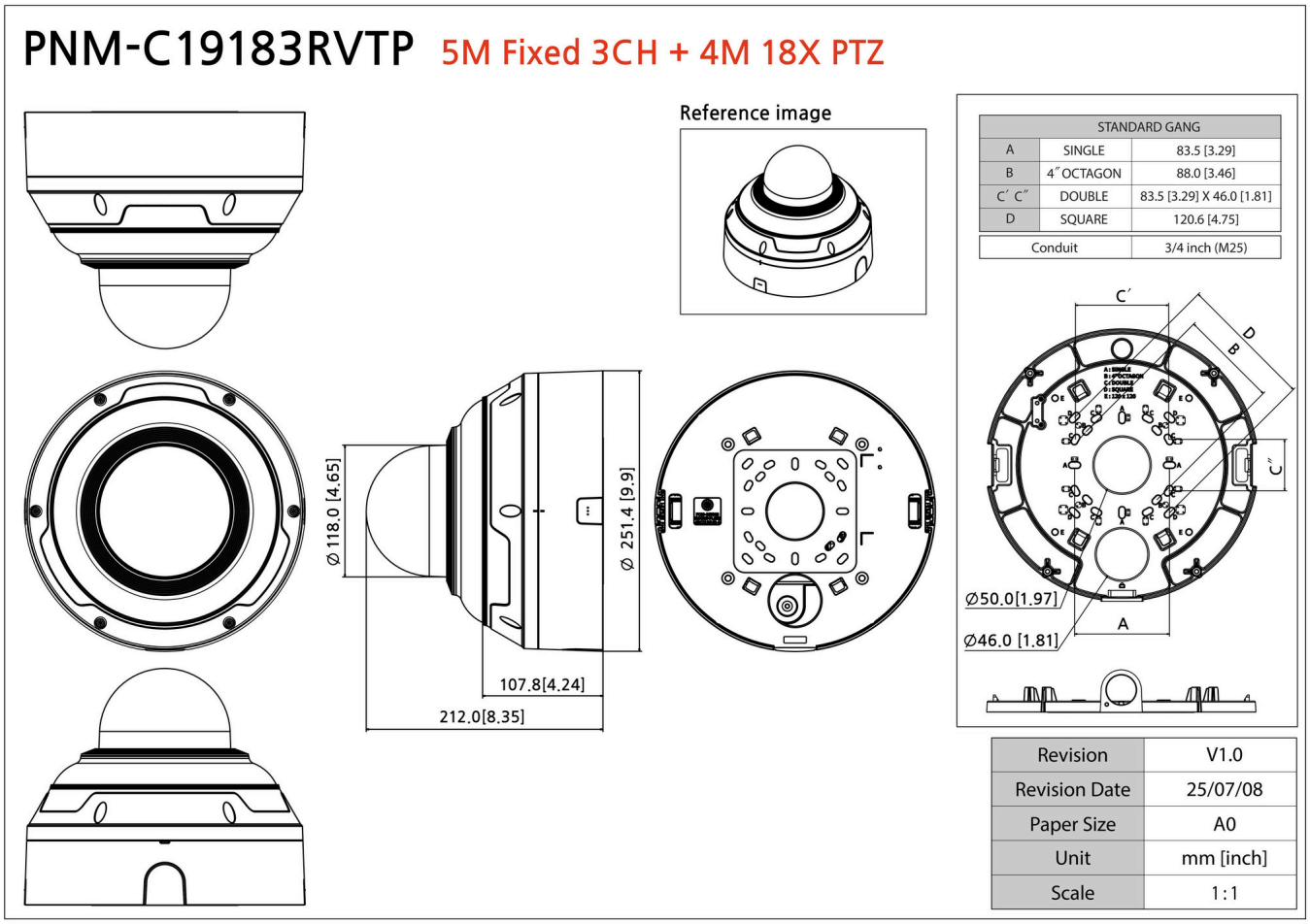

Design and specifications are subject to change without notice. The latest product information / specification can be found at HanwhaVision.com
Hanwha Vision is formerly known as Hanwha Techwin.

© Hanwha Vision CO., LTD. All rights reserved.