Hanwha Vision



Network

PNM-C32083RVQ

4K x 4CH AI IR Multi-directional Camera

Key Features

- 4K x 4CH Resolution x Ch
- 3.3~5.7mm Focal Length
- IP66, IK10 Rated
- 15fps@8MP (H.265, H.264) AI ON, 20fps@8MP (H.265, H.264) AI OFF
- Integrated IR that rotates with camera head, IR viewable length [PoE+] 15m (49ft)
- H.265, H.264, MJPEG codec, Multi-streaming
- 120dB WDR
- Analytics events based on AI engine: Object detection [Person/Vehicle (Car/Bus/Truck/Motorcycle/Bicycle)], IVA (Virtual line/Area, Enter/Exit, Loitering, Direction, Intrusion), Appear/Disappear
- WiseNR II (using AI engine), WiseStream III (Based on AI engine)
- I/O Box compatibility for audio & alarm I/O
- TPM with FIPS 140-2 level 2
- micro SD card 512GB x2
- Operating Temperature: -40°C~+55°C(-40°F~+131°F)
- PoE+ powered
- Hard-coated dome bubble
- IP66, IK10, NEMA4X
- Easy gang-box mounting installation

Design and specifications are subject to change without notice. The latest product information / specification can be found at HanwhaVision.com
Hanwha Vision is formerly known as Hanwha Techwin.

© Hanwha Vision CO., LTD. All rights reserved.

PNM-C32083RVQ

4K x 4CH AI IR Multi-directional Camera



Specifications

Video

Imaging Device	Size	1/2.8"
	Type	CMOS
Resolution		3840x2160, 1920x1080, 1280x1024, 1280x960, 1280x720, 1024x768, 800x600, 800x448, 720x576, 720x480, 640x480, 640x360
Max. Framerate	H.265/H.264	15fps/15fps(60Hz/50Hz)
	MJPEG	15fps(@8MP Max. 5fps)
	Others	Max. 20fps when AI off(MJPEG@8MP Max. 5fps)
Min. Illumination (Lux)	Color(1/30sec, 30IRE)	0.1
	BW(1/30sec, 30IRE)	0.01
Video Out		USB: Micro USB Type B. Preview and installation ONLY. Requires WiFi dongle.

Lens

Focal Length (mm)		3.3~5.7
Zoom Ratio	Optical	1.7x
Max Aperture Ratio (F number)	Wide	1.5
	Tele	1.9
Angular Field of View	Horizontal	109°~56°
	Vertical	55°~31°
	Diagonal	136°~65°
Min. Object Distance		1.3m(4.27ft)
Focus Control		Simple focus
Lens Type		Fixed iris

Pan / Tilt / Rotate

Pan / Tilt / Rotate Range	Pan	0°~360°
	Tilt	0°~65°
	Rotate	0°~90°

Operational

Day & Night	Auto(ICR)

Design and specifications are subject to change without notice. The latest product information / specification can be found at HanwhaVision.com
Hanwha Vision is formerly known as Hanwha Techwin.

© Hanwha Vision CO., LTD. All rights reserved.

Operational

Backlight Compensation		BLC, WDR, SSDR
Wide Dynamic Range (dB)		120
Digital Noise Reduction		WiseNR II (Based on AI engine), SSNR V
Motion Detection	Quantity	8ea
	Shape	8point Polygonal zones
Privacy Masking	Quantity	6ea
	Shape	Rectangular zones
	Color / Option	Gray, Black, White
Gain Control		Low, Middle, High
White Balance		ATW, AWC, Manual, Indoor, Outdoor
LDC		Support
Electronic Shutter	Mode	Minimum, Maximum, Anti flicker, Prefer shutter control(Based on AI engine)
	Speed Range	2~1/12,000sec
Video Rotation		Flip, Mirror, Hallway view(90°/270°) - Each channel separately
Alarm Interface	In/Out	2 configurable I/O ports
	Others	Support extra alarm I/O via optional I/O box
Alarm Triggers		Analytics, Network disconnect, Alarm input, App event, Time schedule, MQTT subscription
Alarm Events When Alarm Trigger Occurred		File upload(image): e-mail/FTP, Notification: e-mail, Recording: SD/SDHC/SDXC or NAS recording at event triggers,Alarm output, Handover: PTZ preset,send message by HTTP/HTTPS/TCP,Audio clip playback, MQTT: publication
Audio In		Selectable(mic in/line in)
Audio Out		Line out
Light Type		IR LED
Light Viewable Length	IR	PoE+: WiseIR 15m(49.21ft) PoE++: WiseIR 20m(65.62ft)
IR Wavelength		850nm

Analytics

Classified Object Type		Person, Face, Vehicle, License plate
Attributes	Person	Upper/Lower clothes color
	Vehicle	Type(car, bus, truck, motorcycle, bicycle), Color
Thumbnail		BestShot
Analytics Events	Based on AI Engine	Object detection, Virtual line(Crossing/Direction), Virtual area(Loitering/Intrusion/Enter/Exit)
	Normal	Defocus detection, Motion detection, Tampering, Audio detection, Sound classification, Virtual area(Appear/Disappear)

Design and specifications are subject to change without notice. The latest product information / specification can be found at HanwhaVision.com
Hanwha Vision is formerly known as Hanwha Techwin.

© Hanwha Vision CO., LTD. All rights reserved.

Network

Ethernet		Metal shielded RJ-45(10/100/1000BASE-T)
Video Compression		H.265: Main, H.264: Main/High,MJPEG
Audio Compression		G.711 u-law /G.726 selectable,G.726(ADPCM) 8kHz,G.711 8kHz, G.726: 16kbps,24kbps,32kbps,40kbps, AAC-LC: 48kbps at 16kHz
Smart Codec		Manual, WiseStreamIII
Bitrate Control		H.265/H.264: CBR or VBR, MJPEG: VBR
Streaming	Unicast	Up to 10 users
	Multicast	Support
	Multiple Streaming	Up to 3 profiles
Protocol		IPv4, IPv6, TCP/IP, UDP/IP, RTP(UDP), RTP(TCP), RTCP, RTSP, NTP, HTTP, HTTPS, SSL/TLS, DHCP, FTP, SMTP, ICMP, IGMPv2, SNMPv1/v2c/v3(MIB-2), ARP, DNS, DDNS, QoS, UPnP, Bonjour, LLDP, SRTP(TCP, UDP Unicast), MQTT
Application Programming Interface	ONVIF	S, G, T, M
	Others	SUNAPI(HTTP API), Hanwha Vision Open Platform
Direct Cloud Connection		Support

Security

OS / Firmware Protect	Encrypted firmware, Secure boot, Signed firmware
User authentication	Digest authentication
Network authentication	IEEE 802.1X(EAP-TLS, EAP-LEAP, EAP-PEAP, MSCHAPv2)
Secure Communication	HTTPS, SRTP
Access Control	IP-based access control
Data Protect	Encryption credentials, Encrypt compress for live recording file export
Audit	Access / System / Event Log management
Device ID	Device certificate(Hanwha Vision Root CA)
Secure Storage	TPM(Trusted platform module)
Security Certificate	Consumer IoT Security Standard (ETSI EN 303 645), Security Built-in Process Certification (IEC 62443-4-1)

General

SoC	Type	CV5
Memory	RAM	8GB
	Flash	1GB
Edge Storage	Micro SD/SDHC/SDXC	Max. 512GB x 2slot(Total 1TB)
Edge Storage(OnCloud)	Micro SD/SDHC/SDXC	Max. 1TB x 2slots (Total 2TB) *Hanwha Vision branded microSD cards have been certified and recommended for OnCloud edge recording.

Design and specifications are subject to change without notice. The latest product information / specification can be found at HanwhaVision.com
Hanwha Vision is formerly known as Hanwha Techwin.

© Hanwha Vision CO., LTD. All rights reserved.

Environmental & Electrical

Operating Condition	Temperature	-40°C~+55°C(-40°F~+131°F)
	Humidity	0~95% RH(non-condensing)
	Others	Start up should be done at above -35°C, Humidity control with AIR vent
Storage Condition	Temperature	-50°C~+60°C(-58°F~+140°F)
	Humidity	0~90% RH(non-condensing)
Input Voltage		PoE+(IEEE802.3at, Class4), PoE++(IEEE802.3bt type3, Class6)
Power Consumption	PoE	PoE++: Max. 30W, typical 22W
	Others	PoE+: Max. 25.5W, typical 22W

Mechanical

Color	White
Material	Aluminum, Hard-coated dome
RAL Code	RAL9003
Product Dimensions	ø250x114.2mm(9.84x4.50")
Product Weight	2,820g(6.22lb)
Compatible Conduit Hole	19.1mm(3/4")(M25)
Compatible Gang Box	Single, Double, 4" Octagon, Square

Certifications & Standards

EMC	FCC 47 CFR 15 Subpart B Class A, ICES-3(A)/NMB-3(A), CE/UKCA - EN55032 Class A, EN 50130-4, EN 61000-3-2, EN 61000-3-3, VCCI CISPR 32 Class A, RCM AS-NZS CISPR 32 Class A, KS C 9832 Class A, KS C 9835
Safety	UL 62368-1, CAN/CSA C22.2 NO. 62368-1, IEC 62471
Environment	IEC/EN 63000, IEC 60529 IP66, IEC 62262 IK10, NEMA 250 type 4X

DORI (EN62676-4 standard)

Detect (25PPM/ 8PPF)	Wide	54.8m(179.73ft)
	Tele	144.4m(473.88ft)
Observe (63PPM/ 19PPF)	Wide	21.9m(71.89ft)
	Tele	57.8m(189.55ft)
Recognize (125PPM/ 38PPF)	Wide	11.0m(35.95ft)
	Tele	28.9m(94.78ft)
Identify (250PPM/ 76PPF)	Wide	5.5m(17.97ft)
	Tele	14.4m(47.39ft)

Design and specifications are subject to change without notice. The latest product information / specification can be found at HanwhaVision.com
Hanwha Vision is formerly known as Hanwha Techwin.

© Hanwha Vision CO., LTD. All rights reserved.

PNM-C32083RVQ

4K x 4CH AI IR Multi-directional Camera



CAD

Unit: mm [inch]

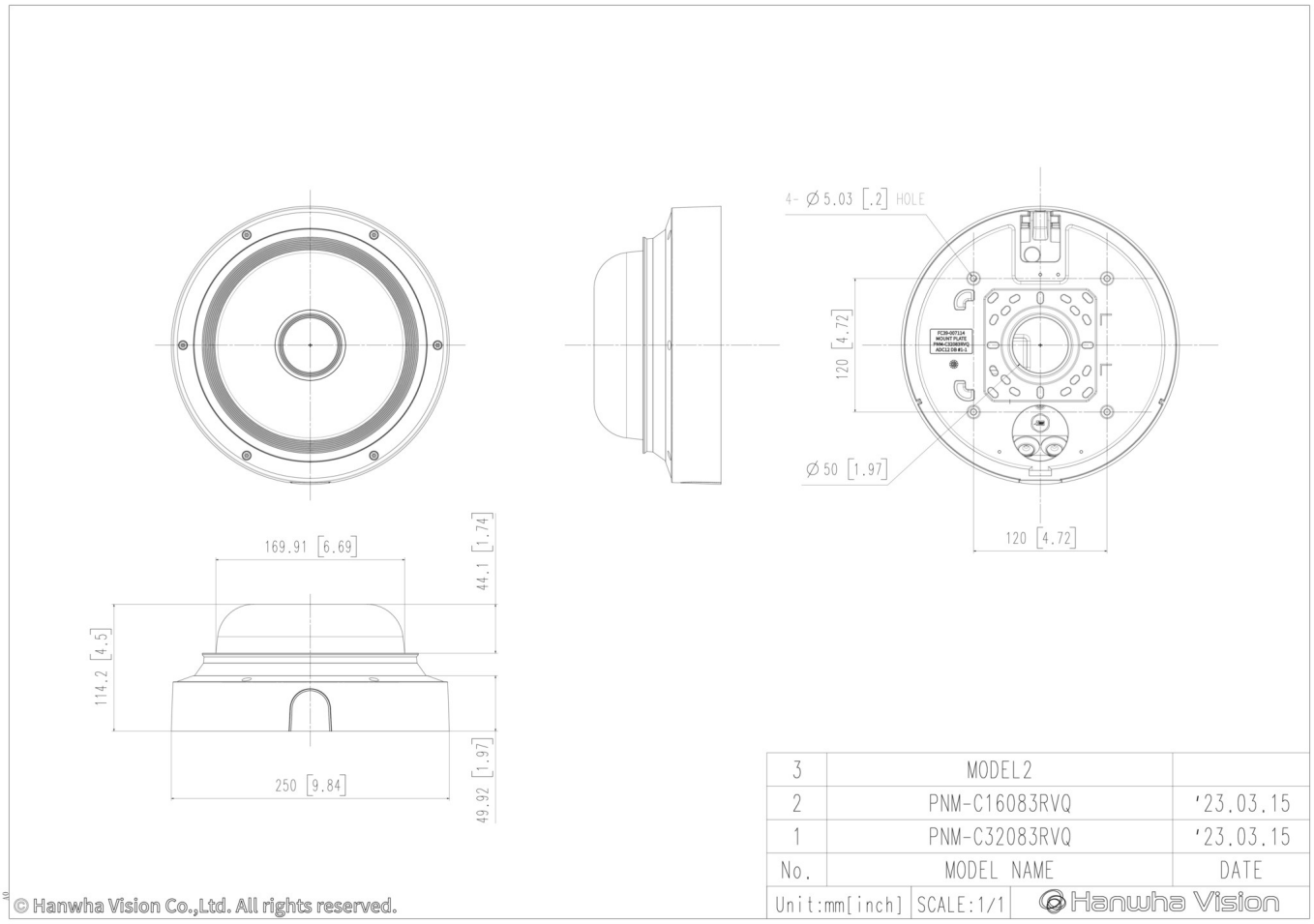

© Hanwha Vision Co.,Ltd. All rights reserved.

Design and specifications are subject to change without notice. The latest product information / specification can be found at HanwhaVision.com
Hanwha Vision is formerly known as Hanwha Techwin.

© Hanwha Vision CO., LTD. All rights reserved.

Compatible Devices



SBP-250C



SBP-250HMW

Design and specifications are subject to change without notice. The latest product information / specification can be found at HanwhaVision.com
Hanwha Vision is formerly known as Hanwha Techwin.

© Hanwha Vision CO., LTD. All rights reserved.