

Network Bullet

PNO-A9311R

4K AI IR Bullet Camera

Key Features

- Maximum 4K resolution
- 6.91~214.7mm (31x) zoom
- IR viewable length 70m(229.66ft)
- Color: 0.075Lux(F1.36, 1/30sec, 30IRE) / BW: 0.0075Lux(F1.36, 1/30sec, 30IRE), 0Lux(IR LED on)
- Day & Night(ICR), WDR(120dB), WiseNR II (Using AI engine), prefer shutter
- H.265, H.264, MJPEG codec, WiseStream II , WiseStreamIII (Using AI engine)
- Object Classification, Attributes and BestShot
- Vehicle counting, Crowd counting, Slip & Fall detection
- Reinforced durability (IP66/IP67, IK10, NEMA4X)
- ONVIF Profile S/G/T/M, SUNAPI(HTTP API), Wisenet open platform
- Next level cybersecurity (TPM with FIPS 140-2 level2)

Design and specifications are subject to change without notice. The latest product information / specification can be found at HanwhaVision.com
Hanwha Vision is formerly known as Hanwha Techwin.

© Hanwha Vision CO., LTD. All rights reserved.

PNO-A9311R

4K AI IR Bullet Camera



Specifications

Video

Imaging Device	Size	1/1.8"
	Type	CMOS
Resolution		3840x2160, 3072x1728, 2688x1520, 2592x1944, 2560x1440, 2048x1536, 1920x1080, 1600x1200, 1280x1024, 1280x960, 1280x720, 1024x768, 800x600, 800x448, 720x576, 720x480, 640x480, 640x360
Max. Framerate	H.265/H.264	30fps/25fps(60Hz/50Hz)
	MJPEG	30fps
Min. Illumination (Lux)	Color(1/30sec, 30IRE)	0.075
	BW(1/30sec, 30IRE)	0.0075
Video Out		CVBS: 1.0 Vp-p / 75Ω composite for installation, USB: Micro USB Type B. Preview and installation ONLY. Requires WiFi dongle.

Lens

Focal Length (mm)		6.91~214.7
Zoom Ratio	Optical	31x
Max Aperture Ratio (F number)	Wide	1.36
	Tele	4.6
Angular Field of View	Horizontal	60.92°~2.2°
	Vertical	35.26°~1.24°
	Diagonal	69.18°~2.52°
Min. Object Distance		3m(9.84ft)
Focus Control		Simple focus
Lens Type		P iris(IR corrected)

Operational

Day & Night	Auto(ICR)
Backlight Compensation	BLC, WDR, SSDR
Wide Dynamic Range (dB)	120
Digital Noise Reduction	WiseNR II (Based on AI engine), SSNR V
Digital Image Stabilization	Support(built-in gyro sensor)

Design and specifications are subject to change without notice. The latest product information / specification can be found at HanwhaVision.com
Hanwha Vision is formerly known as Hanwha Techwin.

© Hanwha Vision CO., LTD. All rights reserved.

Operational

Motion Detection	Quantity	8ea
	Shape	8point Polygonal zones
Privacy Masking	Quantity	3ea
	Shape	Rectangular zones
	Color / Option	Gray, Black, White
Gain Control		Low, Middle, High
White Balance		ATW, AWC, Manual, Indoor, Outdoor
Electronic Shutter	Mode	Minimum, Maximum, Anti flicker, Prefer shutter control(Based on AI engine)
	Speed Range	1/5~1/12,000sec
Video Rotation		Flip, Mirror, Hallway view(90°/270°)
Alarm Interface	In/Out	2 configurable I/O ports
	Others	12VDC output
Alarm Triggers		Analytics, Network disconnect, Alarm input, App event, Time schedule, MQTT subscription
Alarm Events When Alarm Trigger Occurred		File upload(image): e-mail/FTP, Notification: e-mail, Recording: SD/SDHC/SDXC or NAS recording at event triggers,Alarm output, Handover: PTZ preset,send message by HTTP/HTTPS/TCP,Audio clip playback, MQTT: publication
Audio In		Selectable(mic in/line in)
Audio Out		Line out
Light Type		IR LED
Light Viewable Length	IR	WiseIR 70m(229.66ft)
IR Wavelength		850nm

Analytics

Classified Object Type		Person, Face, Vehicle, License plate
Attributes	Person	Upper/Lower clothes color, Gender, Bag
	Vehicle	Type(car, bus, truck, motorcycle, bicycle), Color
	Face	Age, Gender, Face mask, Glasses
Thumbnail		BestShot
Analytics Events	Based on AI Engine	Object detection, Virtual line(Crossing/Direction), Virtual area(Loitering/Intrusion/Enter/Exit), Face mask detection, Social distancing detection, Slip & fall detection
	Normal	Defocus detection, Motion detection, Tampering, Audio detection, Sound classification, Shock detection, Virtual area(Appear/Disappear), WiseDetector for adding custom objects
Business Intelligence	Based on AI Engine	People counting, Queue management, Heatmap, Vehicle counting, Crowd counting

Network

Ethernet	Metal shielded RJ-45(10/100/1000BASE-T)

© Hanwha Vision CO., LTD. All rights reserved.

Network

Video Compression		H.265: Main, H.264: Main/High,MJPEG
Audio Compression		G.711 u-law /G.726 selectable,G.726(ADPCM) 8kHz,G.711 8kHz, G.726: 16kbps,24kbps,32kbps,40kbps, AAC-LC: 48kbps at 16kHz
Smart Codec		Manual, WiseStreamIII
Bitrate Control		H.265/H.264: CBR or VBR, MJPEG: VBR
Streaming	Unicast	Up to 6 users
	Multicast	Support
	Multiple Streaming	Up to 6 profiles
Protocol		IPv4, IPv6, TCP/IP, UDP/IP, RTP(UDP), RTP(TCP), RTCP, RTSP, NTP, HTTP, HTTPS, SSL/TLS, DHCP, FTP, SMTP, ICMP, IGMPv2, SNMPv1/v2c/v3(MIB-2), ARP, DNS, DDNS, QoS, UPnP, Bonjour, LLDP, SRTP(TCP, UDP Unicast), MQTT
Application Programming Interface	ONVIF	S, G, T, M
	Others	SUNAPI(HTTP API), Hanwha Vision Open Platform
Direct Cloud Connection		Support

Security

OS / Firmware Protect	Encrypted firmware, Secure boot, Signed firmware
User authentication	Digest authentication, Prevent brute-force attack
Network authentication	IEEE 802.1X(EAP-TLS, EAP-LEAP, EAP-PEAP, MSCHAPv2)
Secure Communication	HTTPS, WSS(WebSocket Secure), SRTP
Access Control	IP-based access control
Data Protect	Encryption credentials, Encrypt compress for live recording file export
Audit	Access / System / Event Log management
Device ID	Device certificate(Hanwha Vision Root CA)
Secure Storage	TPM(Trusted platform module), SDcard partition encrypt(AES-256)
Security Certificate	TPM 2.0 with FIPS 140-2 level2

General

Memory	RAM	4GB
	Flash	1GB
Edge Storage	Micro SD/SDHC/SDXC	Max. 256GB x 2slot(Total 512GB)

Environmental & Electrical

Operating Condition	Temperature	-40°C~+55°C(-40°F~+131°F)
	Humidity	0~100% RH(condensing)
	Others	Start up should be done at above -30°C, Humidity control with AIR vent
Storage Condition	Temperature	-50°C~+60°C(-58°F~+140°F)
	Humidity	0~90% RH(non-condensing)

Design and specifications are subject to change without notice. The latest product information / specification can be found at HanwhaVision.com
Hanwha Vision is formerly known as Hanwha Techwin.

© Hanwha Vision CO., LTD. All rights reserved.

Environmental & Electrical

Input Voltage		PoE+(IEEE802.3at, Class4), 12VDC
Power Consumption	PoE	Max 25.5W, typical 14.0W
	12VDC	Max 24.0W, typical 12.7.W
Power Redundance Failover		Support

Mechanical

Color	White
Material	Aluminum
RAL Code	RAL9003
Product Dimensions	ø136.2x358.7mm(ø5.36x14.12")(Without sunshield)
Product Weight	3,200g(7.05lb)
Compatible Conduit Hole	19.1mm(3/4")(M25)
Compatible Gang Box	Single, Double, 4" Octagon, Square

Certifications & Standards

EMC	FCC 47 CFR 15 Subpart B Class A, ICES-3(A)/NMB-3(A), CE/UKCA - EN55032 Class A, EN 50130-4, EN 61000-3-2, EN 61000-3-3, VCCI CISPR 32 Class A, RCM AS-NZS CISPR 32 Class A
Safety	UL 62368-1, CAN/CSA C22.2 NO. 62368-1, IEC 62471
Environment	IEC/EN 63000, IEC 60529 IP66, IEC 60529 IP67, IEC 62262 IK10

DORI (EN62676-4 standard)

Detect (25PPM/ 8PPF)	Wide	130.6m(428.4ft)
	Tele	4,000m(13,122ft)
Observe (63PPM/ 19PPF)	Wide	52.2m(171.4ft)
	Tele	1600m(5,249ft)
Recognize (125PPM/ 38PPF)	Wide	26.1m(85.7ft)
	Tele	800m(2,625ft)
Identify (250PPM/ 76PPF)	Wide	13.1m(42.8ft)
	Tele	400m(1,312ft)

Design and specifications are subject to change without notice. The latest product information / specification can be found at HanwhaVision.com
Hanwha Vision is formerly known as Hanwha Techwin.

© Hanwha Vision CO., LTD. All rights reserved.

PNO-A9311R

4K AI IR Bullet Camera



CAD

Unit: mm [inch]

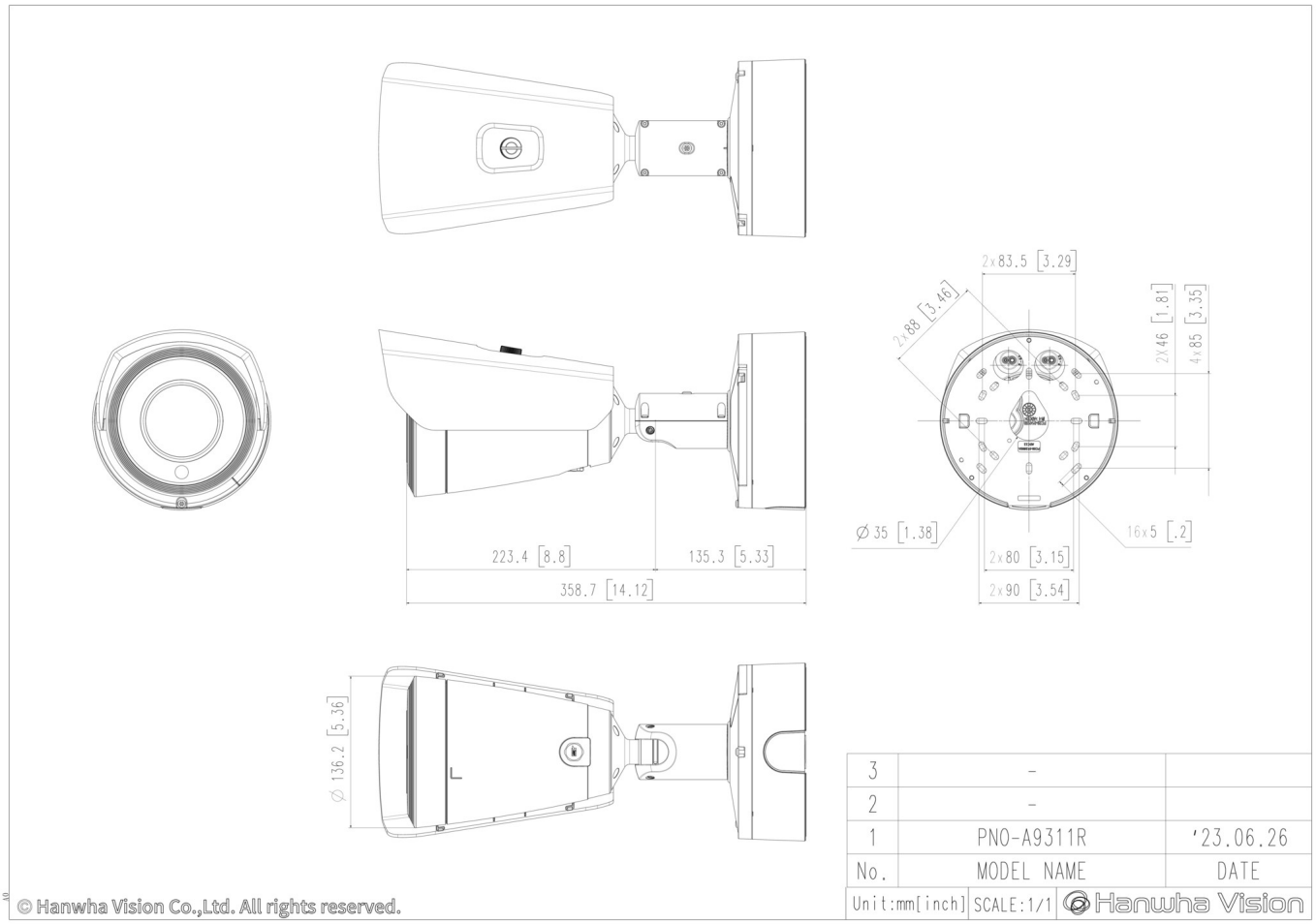

© Hanwha Vision Co.,Ltd. All rights reserved.

Design and specifications are subject to change without notice. The latest product information / specification can be found at HanwhaVision.com
Hanwha Vision is formerly known as Hanwha Techwin.

© Hanwha Vision CO., LTD. All rights reserved.