Network Купольные

PNV-A7082RZ

4MP AI IR Modular Outdoor Vandal Dome Camera

Key Features

- 4MP Image Resolution
- 4.6~9.35mm Focal Length
- 30m IR Length
- IP67, IK11 Rated
- Powered by Wisenet 9, Dual NPU for superior, separated AI processing and image enhancement.
- Magnetic design and Remote PTRZ for Easy Setup
- Case tampering detection for proactive action

Design and specifications are subject to change without notice. The latest product information / specification can be found at HanwhaVision.com
Hanwha Vision is formerly known as Hanwha Techwin.

© Hanwha Vision CO., LTD. All rights reserved.

PNV-A7082RZ

4MP AI IR Modular Outdoor Vandal Dome Camera

Specifications

Video

Imaging Device	Size	1/1.8"
	Type	CMOS
Resolution		2592x1520, 2560x1440, 1920x1080, 1600x1200, 1280x960, 1280x720, 1024x768, 800x600, 640x480, 640x360, 320x240, 320x180
Max. Framerate	H.265/H.264	60fps/50fps(60Hz/50Hz)(WDR off) / 30fps/25fps(60Hz/50Hz)(WDR on)
	MJPEG	30fps(@4MP Max. 5fps)
Min. Illumination (Lux)	Color(1/30sec, 30IRE)	0.03
	BW(1/30sec, 30IRE)	0.003

Lens

Focal Length (mm)		4.6~9.35
Zoom Ratio	Optical	2.0x
Max Aperture Ratio (F number)	Wide	1.3
	Tele	2.15
Angular Field of View	Horizontal	105°~47°
	Vertical	58°~27°
	Diagonal	128°~55°
Min. Object Distance		1.5m(4.92ft)
Focus Control		Simple focus
Lens Type		P iris(IR corrected)

Pan / Tilt / Rotate

Pan / Tilt / Rotate Range	Pan	0°~350°
	Tilt	0°~85°
	Rotate	-95°~95°
	Others	Remote adjustment(Max. 3,650cycles)

Operational

Day & Night	Auto(ICR)
Backlight Compensation	BLC, HLC, WDR, SSDR

Design and specifications are subject to change without notice. The latest product information / specification can be found at HanwhaVision.com
Hanwha Vision is formerly known as Hanwha Techwin.

© Hanwha Vision CO., LTD. All rights reserved.

Operational

Wide Dynamic Range (dB)		120
Digital Noise Reduction		WiseNR II (Based on AI engine), SSNR V
Digital Image Stabilization		Support
Defog		Support
Motion Detection	Quantity	8ea
	Shape	8point Polygonal zones
Privacy Masking	Quantity	32ea
	Shape	8point Polygonal zones
	Color / Option	Gray, Green, Red, Blue, Black, White, Mosaic, Purple, Yellow
	Dynamic Privacy Masking: Color / Option	Gray, Green, Red, Blue, Black, White, Mosaic, Purple, Yellow
Gain Control		Off, Max gain, Manual
White Balance		ATW, NarrowATW, AWC, Manual, Indoor, Outdoor
LDC		Support(Fill/stretch mode)
Electronic Shutter	Mode	Minimum, Maximum, Anti flicker, Prefer shutter control(Based on AI engine)
	Speed Range	2~1/30,000sec
Video Rotation		Flip, Mirror, Hallway view(90°/270°)
Alarm Interface	Others	Support extra alarm I/O via optional I/O box
Alarm Triggers		Analytics, Network disconnect, Alarm input, Time schedule, MQTT subscription, Case tampering, Day/Night, Storage disruption
Alarm Events When Alarm Trigger Occurred		File upload(image): e-mail/FTP/SFTP, File upload(video clip): FTP/SFTP, Notification: e-mail, Recording: SD/SDHC/SDXC or NAS recording at event triggers,Alarm output, Handover: PTZ preset,send message by HTTP/HTTPS/TCP,Audio clip playback, MQTT: publication
Light Type		IR LED
Light Viewable Length	IR	WiseIR 30m(98.43ft)
IR Wavelength		850nm

Analytics

Classified Object Type		Person, Face, Vehicle, License plate
Attributes	Person	Upper/Lower clothes color, Gender, Bag
	Vehicle	Type(car, bus, truck, motorcycle, bicycle), Color
	Face	Age, Gender, Face mask, Glasses
Similarity Search		Support
Thumbnail		BestShot
Analytics Events	Based on AI Engine	Object detection, Virtual line(Crossing/Direction), Motion detection, Face mask detection, Social distancing detection, Slip & fall detection, Virtual area(Loitering/Intrusion/Enter/Exit/Appear/Disappear)
	Normal	Defocus detection, Tampering, Audio detection, Shock detection

Design and specifications are subject to change without notice. The latest product information / specification can be found at HanwhaVision.com
Hanwha Vision is formerly known as Hanwha Techwin.

© Hanwha Vision CO., LTD. All rights reserved.

Analytics

Business Intelligence	Based on AI Engine	People counting, Queue management, Heatmap, Vehicle counting, Crowd counting

Network

Ethernet		Metal shielded RJ-45(10/100/1000BASE-T)
Video Compression		H.265/H.264: Main/Baseline/High, MJPEG
Smart Codec		WiseStream(Based on AI engine)
Bitrate Control		H.265/H.264: CBR or VBR, MJPEG: VBR
Streaming	Unicast	Up to 20 users
	Multicast	Support
	Multiple Streaming	Up to 5 profiles, 3 virtual channel support
Protocol		IPv4, IPv6, TCP/IP, UDP/IP, RTP(UDP), RTP(TCP), RTCP, RTSP, NTP, HTTP, HTTPS, SSL/TLS, DHCP, FTP, SFTP, SMTP, ICMP, IGMPv2, SNMPv1/v2c/v3(MIB-2), ARP, DNS, DDNS, QoS, UPnP, Bonjour, LLDP, CDP, SRTP(TCP, UDP Unicast), MQTT, Syslog
Application Programming Interface	ONVIF	S, G, T, M
	Others	SUNAPI(HTTP API), Hanwha Vision Open Platform
Direct Cloud Connection		Support

Security

OS / Firmware Protect	Encrypted firmware, Secure boot, Signed firmware
User authentication	Digest authentication, Prevent brute-force attack
Network authentication	IEEE 802.1X(EAP-TLS, EAP-LEAP, EAP-PEAP, MSCHAPv2)
Secure Communication	HTTPS, WSS(WebSocket Secure), SRTP
Access Control	IP-based access control, MAC-based access control, Auto logout
Data Protect	Encryption credentials, Encrypt compress for live recording file export
Audit	Access / System / Event Log management
Device ID	Device certificate(Hanwha Vision Root CA)
Secure Storage	SDcard partition encrypt(AES-256), Secure element
Supply Chain Security	SBOM
Security Certificate	Secure element(FIPS 140-3 level3, CC EAL6+), Consumer IoT Security Standard (ETSI EN 303 645)

General

SoC	Type	Wisenet 9
	Dual NPU	Support
Memory	RAM	4GB
	Flash	8GB eMMC
Edge Storage	Micro SD/SDHC/SDXC	Max. 1TB x 2slot(Total 2TB)
Edge Storage(OnCloud)	Micro SD/SDHC/SDXC	Max. 1TB x 2slots (Total 2TB) *Hanwha Vision branded microSD cards have been certified and recommended for OnCloud edge recording.

Design and specifications are subject to change without notice. The latest product information / specification can be found at HanwhaVision.com
Hanwha Vision is formerly known as Hanwha Techwin.

© Hanwha Vision CO., LTD. All rights reserved.

Environmental & Electrical

Operating Condition	Temperature	-50°C~+55°C(-58°F~+131°F)
	Humidity	0~100% RH(condensing)
	Others	+74°C(+165°F)(Max) based on NEMA-TS 2(2.2.7), Start up should be done at above -30°C, Humidity control with AIR vent
Storage Condition	Temperature	-50°C~+60°C(-58°F~+140°F)
	Humidity	0~90% RH(non-condensing)
EPA(Effective Projected Area)		0.017
Input Voltage		PoE+(IEEE802.3at, Class4)
Power Consumption	PoE	Max. 15.0W, typical 9.0W
WisePower		Power monitoring

Mechanical

Color	White
Material	Aluminum, Hard-coated dome
RAL Code	RAL9003
Product Dimensions	ø180x135mm(ø7.09x5.31")
Product Weight	2,100g(4.63lb)
Compatible Conduit Hole	19.1mm(3/4")(M25)
Compatible Gang Box	Single, Double, 4" Octagon, Square

Certifications & Standards

EMC	FCC 47 CFR 15 Subpart B Class A, ICES-3(A)/NMB-3(A), CE/UKCA - EN55032 Class A, EN 50130-4, EN 61000-3-2, EN 61000-3-3, VCCI CISPR 32 Class A, RCM AS-NZS CISPR 32 Class A, KS C 9832 Class A, KS C 9835
Safety	UL 62368-1, CAN/CSA C22.2 NO. 62368-1, IEC 62471
Environment	IEC/EN 63000, IEC 60529 IP66, IEC 60529 IP67, ISO 20653 IP6K9K, IEC 62262 IK11, NEMA TS 2-2013 (2.2.7, 2.2.8, 2.2.9), NEMA 250 type 4X, IEC 60068-2-1, IEC 60068-2-2, IEC 60068-2-6, IEC 60068-2-14, IEC 60068-2-27, IEC 60068-2-78

DORI (EN62676-4 standard)

Detect (25PPM/ 8PPF)	Wide	39.8m(130.51ft)
	Tele	119.2m(391.15ft)
Observe (63PPM/ 19PPF)	Wide	15.9m(52.20ft)
	Tele	47.7m(156.46ft)
Recognize (125PPM/ 38PPF)	Wide	8.0m(26.10ft)
	Tele	23.8m(78.23ft)
Identify (250PPM/ 76PPF)	Wide	4.0m(13.05ft)
	Tele	11.9m(39.12ft)

Design and specifications are subject to change without notice. The latest product information / specification can be found at HanwhaVision.com
Hanwha Vision is formerly known as Hanwha Techwin.

© Hanwha Vision CO., LTD. All rights reserved.

PNV-A7082RZ

4MP AI IR Modular Outdoor Vandal Dome Camera

CAD

Unit: mm [inch]

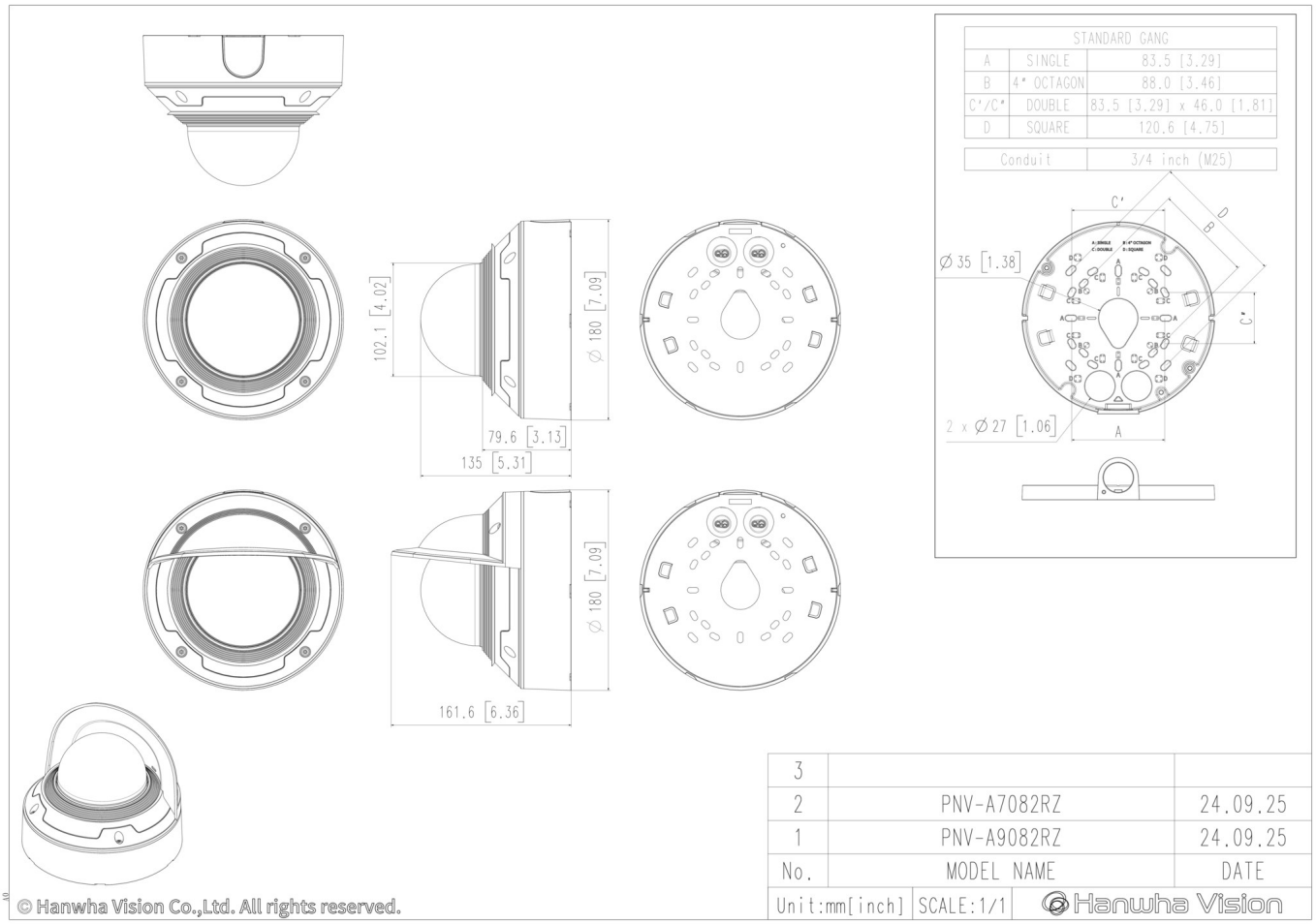

© Hanwha Vision CO., LTD. All rights reserved.

Compatible Devices

SBP-180HMW1

SBP-140CMB

SBP-180CMB

SBP-180CMS

SBP-150CMP

SBP-300CMP

SBP-900CMP

SBP-C15H

SBP-C15NP

SBP-C35H

SBP-C15P

SBP-150CMI

SBP-300CMI

SBP-300CMW1

SBP-900CMW

SBP-300CMTW

SBP-300CMTS

SHD-1370FPW

SBP-160WMW1

SBP-250WMW

SBP-400WMW

SBP-115PFA

SBV-180BW

SBV-180WW

SBP-160TMW1

SBP-150PMW

SBD-180PMW

SBP-156KMW

SBP-156LMW1

SBP-150NBW

SBV-161WCW

SPB-VAN87W

SPP-C7400

SPP-C45W

SBP-300WMW

SBP-300WMW1

SBP-300BW1

SBP-300PMW2

SBP-300KMW1

SBP-300LMW

SBP-300NBW

Design and specifications are subject to change without notice. The latest product information / specification can be found at HanwhaVision.com
Hanwha Vision is formerly known as Hanwha Techwin.

© Hanwha Vision CO., LTD. All rights reserved.