Network Dome

PNV-A9081R

4K AI IR Vandal Dome Camera

Key Features

- Maximum 4K resolution
- 0.05Lux@F1.6 (Color), 0Lux (B/W, IR LED on)
- Day & Night(ICR), WDR(120dB),WiseNR II (Using AI engine), Prefer Shutter
- H.265, H.264, MJPEG codec, WiseStream II , WiseStream III (Using AI engine)
- Video Analytics based on AI
- Object detection and classification(Person, Face, Vehicle, License Plate)
- Face mask detection, Social distancing detection
- Attribute, BestShot
- Modular structure for easy installation
- Requires camera firmware v1.41.03 or later to use Face Mask Detection
- System requirements
- SSM v2.10.8 or later, Genetec plugin v1.0 or later, Milestone plugin v1.0.2 or later, NVR model (XRN-6410DB4/B4, XRN-3210B4)

Design and specifications are subject to change without notice. The latest product information / specification can be found at HanwhaVision.com
Hanwha Vision is formerly known as Hanwha Techwin.

© Hanwha Vision CO., LTD. All rights reserved.

PNV-A9081R

4K AI IR Vandal Dome Camera

Specifications

Video

Imaging Device	Size	1/1.8"
	Type	CMOS
Resolution		3840x2160, 3072x1728, 2688x1520, 2592x1944, 2560x1440, 2048x1536, 1920x1080, 1600x1200, 1280x1024, 1280x960, 1280x720, 1024x768, 800x600, 800x448, 720x576, 720x480, 640x480, 640x360
Max. Framerate	H.265/H.264	30fps/25fps(60Hz/50Hz)
	MJPEG	30fps
Min. Illumination (Lux)	Color(1/30sec, 30IRE)	0.05
	BW(1/30sec, 30IRE)	0.005
Video Out		CVBS: 1.0 Vp-p / 75Ω composite for installation, USB: Micro USB Type B. Preview and installation ONLY. Requires WiFi dongle.

Lens

Focal Length (mm)		4.5~10
Zoom Ratio	Optical	2.2x
Max Aperture Ratio (F number)	Wide	1.6
	Tele	2.65
Angular Field of View	Horizontal	101.4°~45.5°
	Vertical	53.6°~25.5°
	Diagonal	120.7°~52.3°
Min. Object Distance		0.5m(1.64ft)
Focus Control		Simple focus
Lens Type		P iris(IR corrected)

Pan / Tilt / Rotate

Pan / Tilt / Rotate Range	Pan	0˚~360˚
	Tilt	-45˚~85˚
	Rotate	0˚~355˚

Operational

Day & Night	Auto(ICR)

Design and specifications are subject to change without notice. The latest product information / specification can be found at HanwhaVision.com
Hanwha Vision is formerly known as Hanwha Techwin.

© Hanwha Vision CO., LTD. All rights reserved.

Operational

Backlight Compensation		BLC, WDR, SSDR
Wide Dynamic Range (dB)		120
Digital Noise Reduction		WiseNR II (Based on AI engine), SSNR V
Digital Image Stabilization		Support(built-in gyro sensor)
Motion Detection	Quantity	8ea
	Shape	8point Polygonal zones
Privacy Masking	Quantity	6ea
	Shape	Rectangular zones
	Color / Option	Gray, Black, White
Gain Control		Low, Middle, High
White Balance		ATW, AWC, Manual, Indoor, Outdoor
LDC		Support
Electronic Shutter	Mode	Minimum, Maximum, Anti flicker, Prefer shutter control(Based on AI engine)
	Speed Range	1/5~1/12,000sec
Video Rotation		Flip, Mirror, Hallway view(90°/270°)
Alarm Interface	In/Out	2 configurable I/O ports
	Others	12VDC output
Alarm Triggers		Analytics, Network disconnect, Alarm input, App event, Time schedule, MQTT subscription
Alarm Events When Alarm Trigger Occurred		File upload(image): e-mail/FTP, Notification: e-mail, Recording: SD/SDHC/SDXC or NAS recording at event triggers,Alarm output, Handover: PTZ preset,send message by HTTP/HTTPS/TCP,Audio clip playback, MQTT: publication
Audio In		Selectable(mic in/line in)
Audio Out		Line out
Light Type		IR LED
Light Viewable Length	IR	WiseIR 30m(98.42ft)
IR Wavelength		850nm

Analytics

Classified Object Type		Person, Face, Vehicle, License plate
Attributes	Person	Upper/Lower clothes color, Gender, Bag
	Vehicle	Type(car, bus, truck, motorcycle, bicycle), Color
	Face	Age, Gender, Face mask, Glasses
Thumbnail		BestShot

Design and specifications are subject to change without notice. The latest product information / specification can be found at HanwhaVision.com
Hanwha Vision is formerly known as Hanwha Techwin.

© Hanwha Vision CO., LTD. All rights reserved.

Analytics

Analytics Events	Based on AI Engine	Object detection, Virtual line(Crossing/Direction), Virtual area(Loitering/Intrusion/Enter/Exit), Face mask detection, Social distancing detection, Slip & fall detection
	Normal	Defocus detection, Motion detection, Tampering, Audio detection, Sound classification, Shock detection, Virtual area(Appear/Disappear), WiseDetector for adding custom objects
Business Intelligence	Based on AI Engine	People counting, Queue management, Heatmap, Vehicle counting, Crowd counting

Network

Ethernet		Metal shielded RJ-45(10/100/1000BASE-T)
Video Compression		H.265/H.264: Main/High, MJPEG
Audio Compression		G.711 u-law /G.726 selectable,G.726(ADPCM) 8kHz,G.711 8kHz, G.726: 16kbps,24kbps,32kbps,40kbps, AAC-LC: 48kbps at 16kHz
Smart Codec		Manual, WiseStreamIII
Bitrate Control		H.265/H.264: CBR or VBR, MJPEG: VBR
Streaming	Unicast	Up to 10 users
	Multicast	Support
	Multiple Streaming	Up to 5 profiles
Protocol		IPv4, IPv6, TCP/IP, UDP/IP, RTP(UDP), RTP(TCP), RTCP, RTSP, NTP, HTTP, HTTPS, SSL/TLS, DHCP, FTP, SMTP, ICMP, IGMPv2, SNMPv1/v2c/v3(MIB-2), ARP, DNS, DDNS, QoS, UPnP, Bonjour, LLDP, SRTP(TCP, UDP Unicast), MQTT
Application Programming Interface	ONVIF	S, G, T, M
	Others	SUNAPI(HTTP API), Hanwha Vision Open Platform
Direct Cloud Connection		Support

Security

OS / Firmware Protect	Encrypted firmware, Secure boot, Signed firmware
User authentication	Digest authentication, Prevent brute-force attack
Network authentication	IEEE 802.1X(EAP-TLS, EAP-LEAP, EAP-PEAP, MSCHAPv2)
Secure Communication	HTTPS, WSS(WebSocket Secure)
Access Control	IP-based access control
Data Protect	Encryption credentials, Encrypt compress for live recording file export
Audit	Access / System / Event Log management
Device ID	Device certificate(Hanwha Vision Root CA)
Secure Storage	SDcard partition encrypt(AES-256)
Security Certificate	IACS Component Security Requirements Certification (IEC 62443-4-2)

General

Memory	RAM	4GB
	Flash	512MB

Design and specifications are subject to change without notice. The latest product information / specification can be found at HanwhaVision.com
Hanwha Vision is formerly known as Hanwha Techwin.

© Hanwha Vision CO., LTD. All rights reserved.

General

Edge Storage	Micro SD/SDHC/SDXC	Max. 256GB x 2slot(Total 512GB)

Environmental & Electrical

Operating Condition	Temperature	-50°C~+55°C(-58°F~+131°F)
	Humidity	0~90% RH(non-condensing)
	Others	Start up should be done at above -30°C
Storage Condition	Temperature	-50°C~+60°C(-58°F~+140°F)
	Humidity	0~90% RH(non-condensing)
Input Voltage		PoE+(IEEE802.3at, Class4), 12VDC
Power Consumption	PoE	Max 20.00W, typical 17.00W
	12VDC	Max 18.70W, typical 15.00W

Mechanical

Color	White
Material	Aluminum
RAL Code	RAL9003
Product Dimensions	Ø180x125mm(7.09x4.92")
Product Weight	1,900g(4.19lb)
Compatible Conduit Hole	19.1mm(3/4")(M25)
Compatible Gang Box	Single, Double, 4" Octagon, Square

DORI (EN62676-4 standard)

Detect (25PPM/ 8PPF)	Wide	62.2m(204.04ft)
	Tele	185.4m(608.31ft)
Observe (63PPM/ 19PPF)	Wide	24.9m(81.62ft)
	Tele	74.2m(243.32ft)
Recognize (125PPM/ 38PPF)	Wide	12.4m(40.81ft)
	Tele	37.1m(121.66ft)
Identify (250PPM/ 76PPF)	Wide	6.2m(20.40ft)
	Tele	18.5m(60.83ft)

Design and specifications are subject to change without notice. The latest product information / specification can be found at HanwhaVision.com
Hanwha Vision is formerly known as Hanwha Techwin.

© Hanwha Vision CO., LTD. All rights reserved.

PNV-A9081R

4K AI IR Vandal Dome Camera

CAD

Unit: mm [inch]

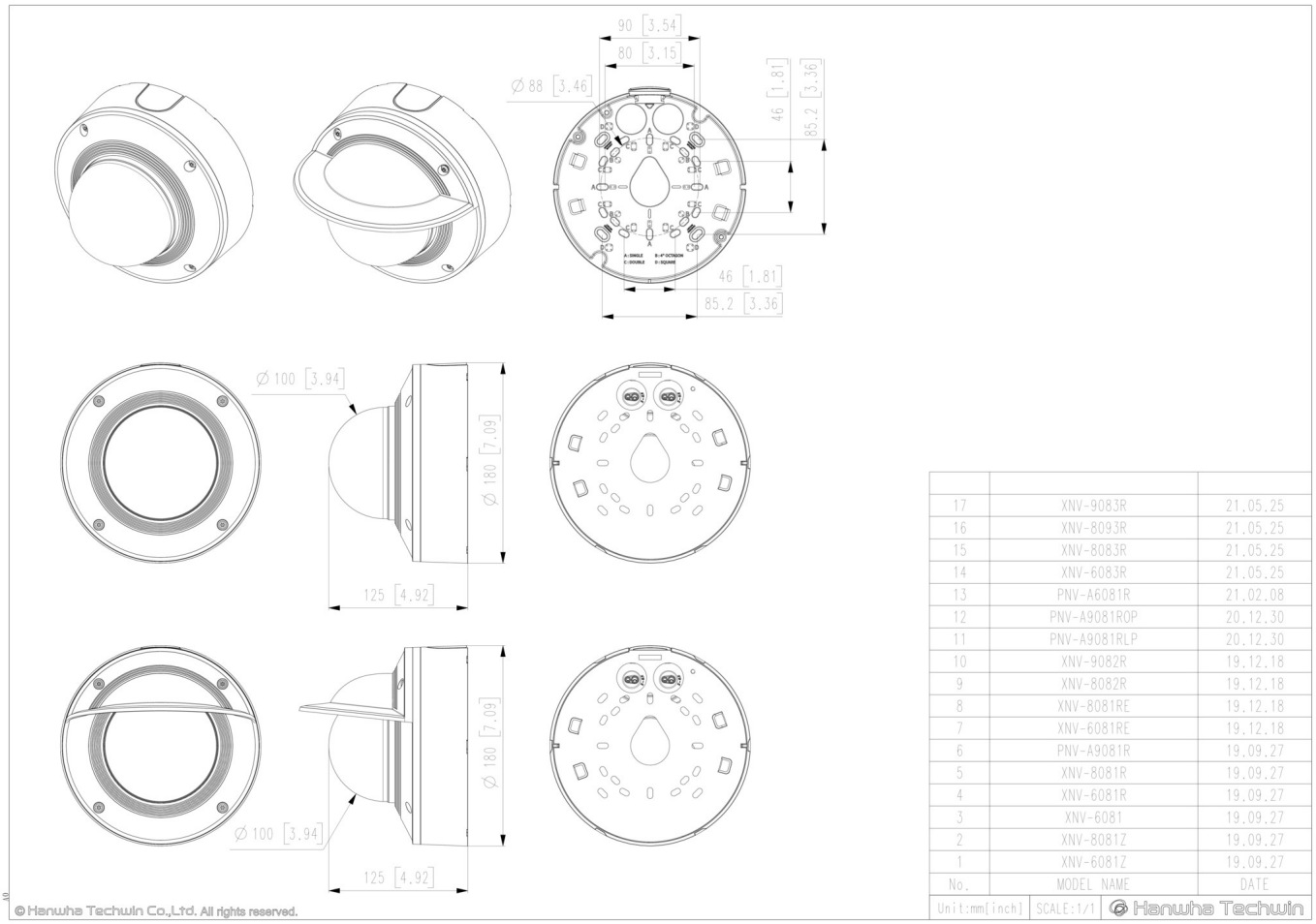

No.	MODEL NAME	DATE
17	XNV-9083R	21.05.25
16	XNV-8093R	21.05.25
15	XNV-8083R	21.05.25
14	XNV-6083R	21.05.25
13	PNV-A6081R	21.02.08
12	PNV-A9081ROP	20.12.30
11	PNV-A9081RLP	20.12.30
10	XNV-9082R	19.12.18
9	XNV-8082R	19.12.18
8	XNV-8081RE	19.12.18
7	XNV-6081RE	19.12.18
6	PNV-A9081R	19.09.27
5	XNV-8081R	19.09.27
4	XNV-6081R	19.09.27
3	XNV-6081	19.09.27
2	XNV-8081Z	19.09.27
1	XNV-6081Z	19.09.27

Design and specifications are subject to change without notice. The latest product information / specification can be found at HanwhaVision.com
Hanwha Vision is formerly known as Hanwha Techwin.

© Hanwha Vision CO., LTD. All rights reserved.

Compatible Devices

SBC-180B

SBP-300LMW

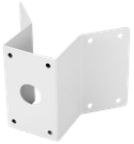

SBP-300KMW

SBP-300BW

SBP-300PMW

SBP-300WMW

Occupancy Monitoring Application

SBP-300NBW

SBP-300WMW1

AI Plug-in

SBP-390WMW2

SPB-VAN85W

SBP-300CMW

SBP-187HMW

Design and specifications are subject to change without notice. The latest product information / specification can be found at HanwhaVision.com
Hanwha Vision is formerly known as Hanwha Techwin.

© Hanwha Vision CO., LTD. All rights reserved.