

Network Dome

PNV-A9081RLP

4K LPR/ANPR/MMCR IR Vandal Dome Camera

Key Features

- Max. 4K resolution
- 0.05Lux@F1.6 (Color), 0Lux (B/W, IR LED on)
- Day & Night(ICR), WDR(120dB)
- IR Viewable Length 30m (98.42ft)
- H.265, H.264, MJPEG codec, WiseStream II
- Wisenet Road AI application (Pre-installed)
  - License/Number Plate Recognition
  - Make/Model/Color Recognition
  - Black/White list notification
  - Smart Search (LP/NP, Country, brand, model, color)

※ Specifications require Road AI App version v7.3532 or higher

Design and specifications are subject to change without notice. The latest product information / specification can be found at HanwhaVision.com
Hanwha Vision is formerly known as Hanwha Techwin.

© Hanwha Vision CO., LTD. All rights reserved.

PNV-A9081RLP

4K LPR/ANPR/MMCR IR Vandal Dome Camera



Specifications

Video

Imaging Device	Size	1/1.8"
	Type	CMOS
Resolution		3840x2160, 3072x1728, 2688x1520, 2592x1944, 2560x1440, 2048x1536, 1920x1080, 1600x1200, 1280x1024, 1280x960, 1280x720, 1024x768, 800x600, 800x448, 720x576, 720x480, 640x480, 640x360
Max. Framerate	H.265/H.264	30fps/25fps(60Hz/50Hz)
	MJPEG	30fps
Min. Illumination (Lux)	Color(1/30sec, 30IRE)	0.05
	BW(1/30sec, 30IRE)	0.005
Video Out		CVBS: 1.0 Vp-p / 75Ω composite for installation, USB: Micro USB Type B. Preview and installation ONLY. Requires WiFi dongle.

Lens

Focal Length (mm)		4.5~10
Zoom Ratio	Optical	2.2x
Max Aperture Ratio (F number)	Wide	1.6
	Tele	2.65
Angular Field of View	Horizontal	101.4°~45.5°
	Vertical	53.6°~25.5°
	Diagonal	120.7°~52.3°
Min. Object Distance		0.5m(1.64ft)
Focus Control		Simple focus
Lens Type		P iris(IR corrected)

Pan / Tilt / Rotate

Pan / Tilt / Rotate Range	Pan	0˚~360˚
	Tilt	-45˚~85˚
	Rotate	0˚~355˚

Operational

Day & Night	Auto(ICR)

Design and specifications are subject to change without notice. The latest product information / specification can be found at HanwhaVision.com
Hanwha Vision is formerly known as Hanwha Techwin.

© Hanwha Vision CO., LTD. All rights reserved.

Operational

Backlight Compensation		BLC, WDR, SSDR
Wide Dynamic Range (dB)		120
Digital Noise Reduction		SSNR V
Digital Image Stabilization		Support(built-in gyro sensor)
Motion Detection	Quantity	8ea
	Shape	8point Polygonal zones
Privacy Masking	Quantity	6ea
	Shape	Rectangular zones
	Color / Option	Gray, Black, White
Gain Control		Low, Middle, High
White Balance		ATW, AWC, Manual, Indoor, Outdoor
LDC		Support
Electronic Shutter	Mode	Minimum, Maximum, Anti flicker
	Speed Range	1/5~1/12,000sec
Video Rotation		Flip, Mirror, Hallway view(90°/270°)
Alarm Interface	In/Out	Input 1ea, Output 1ea
	Others	12VDC output
Alarm Triggers		Analytics, Network disconnect, Alarm input
Alarm Events When Alarm Trigger Occurred		File upload(image): e-mail/FTP, Notification: e-mail,Alarm output, Handover: PTZ preset,send message by HTTP/HTTPS/TCP,Audio clip playback,NAS recording at event triggers
Audio In		Selectable(mic in/line in)
Audio Out		Line out
Light Type		IR LED
Light Viewable Length	IR	30m(98.42ft)
IR Wavelength		850nm

Analytics

Analytics Events	Normal	Defocus detection, Motion detection, Tampering, Audio detection, Sound classification, Shock detection

Network

Ethernet	Metal shielded RJ-45(10/100/1000BASE-T)
Video Compression	H.265: Main, H.264: Main/High,MJPEG
Audio Compression	G.711 u-law /G.726 selectable,G.726(ADPCM) 8kHz,G.711 8kHz, G.726: 16kbps,24kbps,32kbps,40kbps, AAC-LC: 48kbps at 16kHz
Smart Codec	Manual, WiseStream II

Design and specifications are subject to change without notice. The latest product information / specification can be found at HanwhaVision.com
Hanwha Vision is formerly known as Hanwha Techwin.

© Hanwha Vision CO., LTD. All rights reserved.

Network

Bitrate Control		H.265/H.264: CBR or VBR, MJPEG: VBR
Streaming	Unicast	Up to 10 users
	Multicast	Support
	Multiple Streaming	Up to 5 profiles
Protocol		IPv4, IPv6, TCP/IP, UDP/IP, RTP(UDP), RTP(TCP), RTCP, RTSP, NTP, HTTP, HTTPS, SSL/TLS, DHCP, FTP, SMTP, ICMP, IGMPv2, SNMPv1/v2c/v3(MIB-2), ARP, DNS, DDNS, QoS, UPnP, Bonjour, LLDP, SRTP(TCP, UDP Unicast)
Application Programming Interface	ONVIF	S, G, T
	Others	SUNAPI(HTTP API)
Direct Cloud Connection		Support

Security

OS / Firmware Protect	Encrypted firmware, Secure boot, Signed firmware
User authentication	Digest authentication, Prevent brute-force attack
Network authentication	IEEE 802.1X(EAP-TLS, EAP-LEAP, EAP-PEAP, MSCHAPv2)
Secure Communication	HTTPS, WSS(WebSocket Secure), SRTP
Access Control	IP-based access control
Data Protect	Encryption credentials, Encrypt compress for live recording file export
Audit	Access / System / Event Log management
Device ID	Device certificate(Hanwha Vision Root CA)
Security Certificate	None, None

General

Memory	RAM	4GB
	Flash	512MB
Edge Storage	Micro SD/SDHC/SDXC	1slot (32GB card preinstalled) dedicated to strong LPR images from Wisenet Road AI app only (not for video recording)

Environmental & Electrical

Operating Condition	Temperature	-40°C~+55°C(-40°F~+131°F)
	Humidity	0~90% RH(non-condensing)
	Others	Start up should be done at above -30°C
Storage Condition	Temperature	-50°C~+60°C(-58°F~+140°F)
	Humidity	0~90% RH(non-condensing)
Input Voltage		PoE+(IEEE802.3at, Class4), 12VDC
Power Consumption	PoE	Max 20.00W, typical 17.00W
	12VDC	Max 18.70W, typical 15.00W

Design and specifications are subject to change without notice. The latest product information / specification can be found at HanwhaVision.com
Hanwha Vision is formerly known as Hanwha Techwin.

© Hanwha Vision CO., LTD. All rights reserved.

Mechanical

Color	White
Material	Aluminum
RAL Code	RAL9003
Product Dimensions	Ø180x125mm(7.09x4.92")
Product Weight	1,900g(4.19lb)
Compatible Conduit Hole	19.1mm(3/4")(M25)
Compatible Gang Box	Single, Double, 4" Octagon, Square

Wisenet Road AI LPR/ANPR/MMCR

App Type		CNN (Convolutional Neural Network) AI
LPR Usage Condition	NA	Community Traffic, Parking Application
	EU	Community Traffic, Parking Application
Speed Description by Region	NA	Low to Moderate Speed
	EU	Low to Moderate Speed
Lane Coverage_NA	1 Lane	3.6m/12ft wide (with built in IR)
	2 Lanes	8.1m/26ft wide (with built in IR)
Lane Coverage_EU	1 Lane	3.6m/12ft wide (with built in IR)
	2 Lanes	8.1m/26ft wide (with built in IR)
	3 Lanes	16.2m/53ft wide (with built in IR)
Plate Capture Resolution_NA	1 Lane	4K
	2 Lanes	4K
Plate Capture Resolution_EU	1 Lane	4K
	2 Lanes	4K
	3 Lanes	4K
Speed Limit_NA	1 Lane	Up to 90km/h (56mph)
	2 Lanes	Up to 70km/h (43mph)
Speed Limit_EU	1 Lane	Up to 110km/h (68mph)
	2 Lanes	Up to 100km/h (62mph)
	3 Lanes	Up to 45km/h (28mph)
Min. Forward Distance_NA	1 Lane	6m (19.7ft)
	2 Lanes	8m (26.2ft)
Min. Forward Distance_EU	1 Lane	6m (19.7ft)
	2 Lanes	6m (19.7ft)
	3 Lanes	9m (29.5ft)
Max. Forward Distance_NA	1 Lane	15m (49.2ft)
	2 Lanes	15m (49.2ft)

Design and specifications are subject to change without notice. The latest product information / specification can be found at HanwhaVision.com
Hanwha Vision is formerly known as Hanwha Techwin.

© Hanwha Vision CO., LTD. All rights reserved.

Wisenet Road AI LPR/ANPR/MMCR

Max. Forward Distance_EU	1 Lane	20m (65.6ft)
	2 Lanes	20m (65.6ft)
	3 Lanes	20m (65.6ft)
Max. Horizontal Angle by Region	NA	30° for highway, 45° for traffic observation
	EU	30° for highway, 45° for traffic observation
Max. Vertical Angle by Region	NA	30°
	EU	30°
Vehicle Recognition		Make: 100+ makes Model: 4700+ models Color: 11 colors
Available Countries		Albania, Armenia, Austria, Belarus, Belgium, Bosnia and Herzegovina, Bulgaria, Cyprus, Czechia, Denmark, Estonia, Finland, France, Greece, Germany, Hungary, Ireland, Iceland, Italy, Lithuania, Luxembourg, Latvia, Montenegro, North Macedonia, Malta, Netherlands, Norway, Poland, Portugal, Romania, Serbia, Slovenia, Slovakia, Spain, Switzerland, Turkey, United Kingdom, United States of America, Canada, Russian Federation, Azerbaijan, Uzbekistan, Ukraine, Kyrgyzstan, Kazakhstan, Tajikistan, Georgia, Turkmenistan, Vietnam, Indonesia, Bahrain, Kuwait, Oman, Qatar, KSA, UAE, South Africa, Hongkong/Taiwan (LPR only), Australia/New Zealand (LPR only), Peru/Columbia (LPR only), Liechtenstein, Mexico, Moldova, Monaco, San Marino, Sweden, Croatia, Czech Republic, Gibraltar, Israel, Kosovo, Macedonia, Mongolia
Integration Options		JSON over HTTP, UTMC 1, UTMC 2, NVR, Wisenet WAVE
VMS Support		Wisenet WAVE, Wisenet SSM, Genetec Security Center, Milestone Xprotect, Genetec AutoVu

Design and specifications are subject to change without notice. The latest product information / specification can be found at HanwhaVision.com
Hanwha Vision is formerly known as Hanwha Techwin.

© Hanwha Vision CO., LTD. All rights reserved.

PNV-A9081RLP

4K LPR/ANPR/MMCR IR Vandal Dome Camera



CAD

Unit: mm [inch]

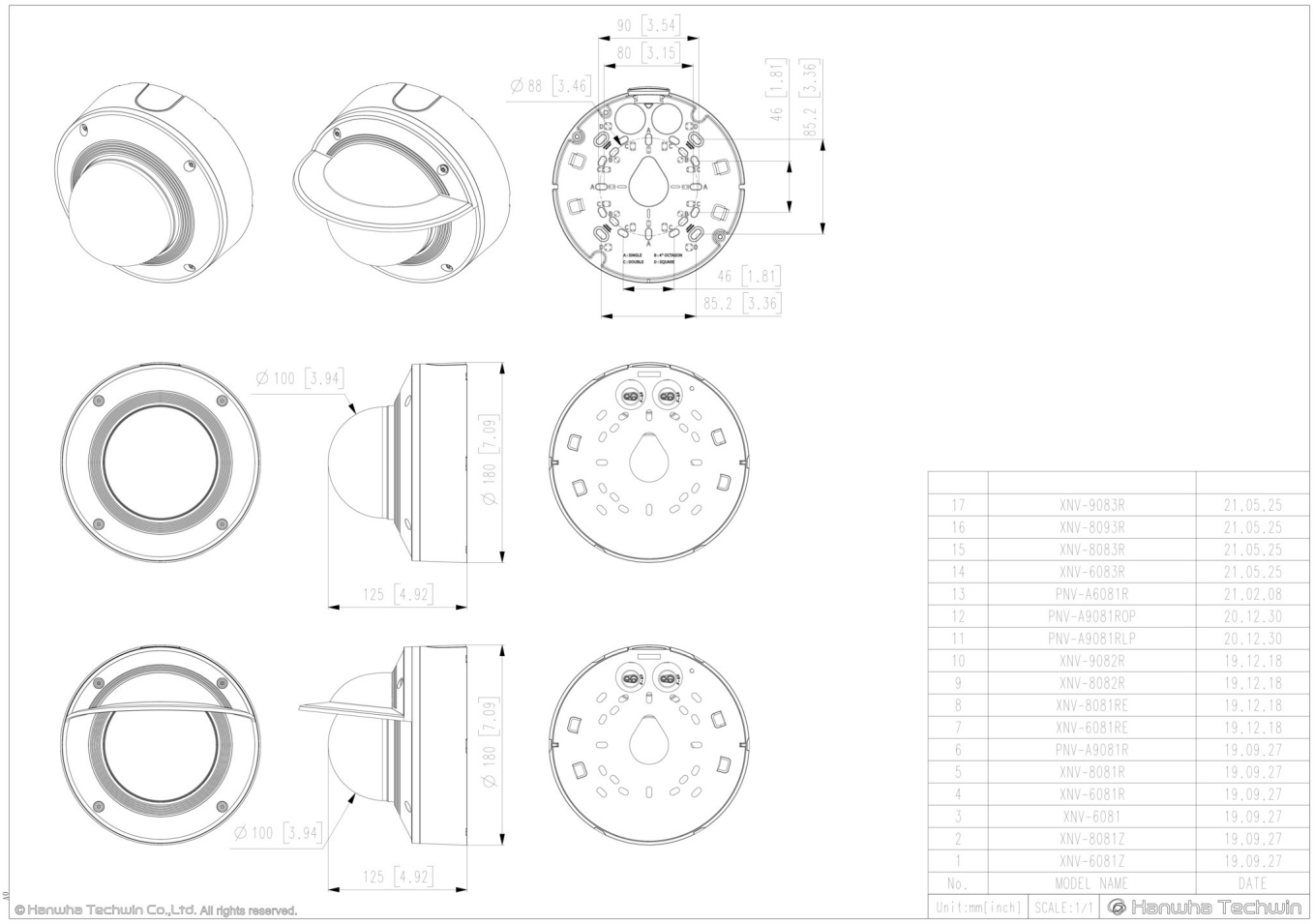

No.	MODEL NAME	DATE
17	XNV-9083R	21.05.25
16	XNV-8093R	21.05.25
15	XNV-8083R	21.05.25
14	XNV-6083R	21.05.25
13	PNV-A6081R	21.02.08
12	PNV-A9081ROP	20.12.30
11	PNV-A9081RLP	20.12.30
10	XNV-9082R	19.12.18
9	XNV-8082R	19.12.18
8	XNV-8081RE	19.12.18
7	XNV-6081RE	19.12.18
6	PNV-A9081R	19.09.27
5	XNV-8081R	19.09.27
4	XNV-6081R	19.09.27
3	XNV-6081	19.09.27
2	XNV-8081Z	19.09.27
1	XNV-6081Z	19.09.27

Unit:mm[inch] | SCALE:1/1 | Hanwha Techwin

Design and specifications are subject to change without notice. The latest product information / specification can be found at HanwhaVision.com
Hanwha Vision is formerly known as Hanwha Techwin.

© Hanwha Vision CO., LTD. All rights reserved.

Compatible Devices



SBC-180B



SBP-300LMW



SBP-300WMW1



SBP-300BW



SBP-300PMW



SPB-VAN85W



SBP-300CMW



SBP-187HMW

Design and specifications are subject to change without notice. The latest product information / specification can be found at HanwhaVision.com
Hanwha Vision is formerly known as Hanwha Techwin.

© Hanwha Vision CO., LTD. All rights reserved.