

Network Dome

QND-6011

2M H.265 Dome Camera(Q mini)

Key Features

- Max. 2Megapixel (1920 x 1080) resolution
- 2.8mm fixed lens
- 0.03Lux (Color), WDR (120dB)
- Max. 30fps@2MP (H.265 / H.264)
- H.265, H.264, MJPEG codec support, Multiple streaming
- Tampering, Motion detection, Defocus detection
- Micro SD / SDHC / SDXC memory slot (Max. 128GB)
- Hallway view, WiseStream II support
- LDC, PoE

Design and specifications are subject to change without notice. The latest product information / specification can be found at HanwhaVision.com
Hanwha Vision is formerly known as Hanwha Techwin.

© Hanwha Vision CO., LTD. All rights reserved.

QND-6011

2M H.265 Dome Camera(Q mini)



Specifications

Video

Imaging Device	Size	1/2.8"
	Type	CMOS
Resolution		1920x1080, 1280x960, 1280x720, 800x600, 800x448, 720x576, 720x480, 640x480, 640x360
Max. Framerate	H.265/H.264	30fps/25fps(60Hz/50Hz)
	MJPEG	15fps(@2MP Max. 4fps)
Min. Illumination (Lux)	Color(1/30sec, 30IRE)	0.03
	BW(1/30sec, 30IRE)	0.003

Lens

Focal Length (mm)		2.8
Max Aperture Ratio (F number)	Wide	2.0
Angular Field of View	Horizontal	114°
	Vertical	62°
	Diagonal	135°
Focus Control		Fixed

Pan / Tilt / Rotate

Pan / Tilt / Rotate Range	Pan	0°~350°
	Tilt	0°~69°
	Rotate	0°~355°

Operational

Day & Night		Auto(Electrical)
Backlight Compensation		BLC, WDR, SSDR
Wide Dynamic Range (dB)		120
Digital Noise Reduction		SSNR
Motion Detection	Quantity	4ea
	Shape	8point Polygonal zones

Design and specifications are subject to change without notice. The latest product information / specification can be found at HanwhaVision.com
Hanwha Vision is formerly known as Hanwha Techwin.

© Hanwha Vision CO., LTD. All rights reserved.

Operational

Privacy Masking	Quantity	6ea
	Shape	Rectangular zones
Gain Control		Low, Middle, High
White Balance		ATW, AWC, Manual, Indoor, Outdoor
LDC		Support
Electronic Shutter	Mode	Minimum, Maximum, Anti flicker
	Speed Range	1/5~1/12,000sec
Video Rotation		Flip, Mirror, Hallway view(90°/270°)
Alarm Triggers		Analytics, Network disconnect
Alarm Events When Alarm Trigger Occurred		File upload(image): e-mail/FTP, Notification: e-mail, Recording: SD/SDHC/SDXC or NAS recording at event triggers, Handover: PTZ preset

Analytics

Analytics Events	Normal	Defocus detection, Motion detection, Tampering
Business Intelligence	Normal	People counting

Network

Ethernet		RJ-45(10/100BASE-T)
Video Compression		H.265: Main, H.264: Main/High,MJPEG
Smart Codec		WiseStream II
Bitrate Control		H.265/H.264: CBR or VBR, MJPEG: VBR
Streaming	Unicast	Up to 6 users
	Multicast	Support
	Multiple Streaming	Up to 3 profiles
Protocol		IPv4, IPv6, TCP/IP, UDP/IP, RTP(UDP), RTP(TCP), RTCP, RTSP, NTP, HTTP, HTTPS, SSL/TLS, DHCP, FTP, SMTP, ICMP, IGMPv2, SNMPv1/v2c/v3(MIB-2), ARP, DNS, DDNS, QoS, UPnP, Bonjour, LLDP
Application Programming Interface	ONVIF	S, G, T
	Others	SUNAPI(HTTP API), Hanwha Vision Open Platform
Direct Cloud Connection		Optional (needs gateway)

Security

OS / Firmware Protect	Encrypted firmware
User authentication	Digest authentication, Prevent brute-force attack
Network authentication	IEEE 802.1X(EAP-TLS, EAP-LEAP, EAP-PEAP, MSCHAPv2)
Secure Communication	HTTPS, WSS(WebSocket Secure), SRTP
Access Control	IP-based access control

Design and specifications are subject to change without notice. The latest product information / specification can be found at HanwhaVision.com
Hanwha Vision is formerly known as Hanwha Techwin.

© Hanwha Vision CO., LTD. All rights reserved.

Security

Data Protect	Encryption credentials, Encrypt compress for live recording file export
Audit	Access / System / Event Log management
Device ID	Device certificate(Hanwha Vision Root CA)
Secure Storage	SDcard partition encrypt(AES-256)

General

Memory	RAM	512MB
	Flash	256MB
Edge Storage	Micro SD/SDHC/SDXC	Max. 128GB x 1slot

Environmental & Electrical

Operating Condition	Temperature	-10°C~+55°C(+14°F~+131°F)
	Humidity	0~90% RH(non-condensing)
Storage Condition	Temperature	-30°C~+60°C(-22°F~+140°F)
	Humidity	0~90% RH(non-condensing)
Input Voltage		PoE(IEEE802.3af, Class2)
Power Consumption	PoE	Max. 4.80W, typical 2.80W

Mechanical

Color	White
Material	Plastic
RAL Code	RAL9003
Product Dimensions	ø99.0x56.0mm(ø3.9x2.2")
Product Weight	145g(0.32lb)

Certifications & Standards

EMC	FCC 47 CFR 15 Subpart B Class A, ICES-3(A)/NMB-3(A), CE/UKCA - EN55032 Class A, EN 50130-4, EN 61000-3-2, EN 61000-3-3, RCM AS-NZS CISPR 32 Class A, KS C 9832 Class A, KS C 9835
Safety	UL 62368-1, CAN/CSA C22.2 NO. 62368-1, IEC 62471
Environment	IEC/EN 63000, IEC 62262 IK08, IEC 60529 IP42

DORI (EN62676-4 standard)

Detect (25PPM/ 8PPF)	Wide	25.1m(82.21ft)
Observe (63PPM/ 19PPF)	Wide	10.0m(32.89ft)
Recognize (125PPM/ 38PPF)	Wide	5.0m(16.44ft)
Identify (250PPM/ 76PPF)	Wide	2.5m(8.22ft)

Design and specifications are subject to change without notice. The latest product information / specification can be found at HanwhaVision.com
Hanwha Vision is formerly known as Hanwha Techwin.

© Hanwha Vision CO., LTD. All rights reserved.

QND-6011

2M H.265 Dome Camera(Q mini)



CAD

Unit: mm [inch]

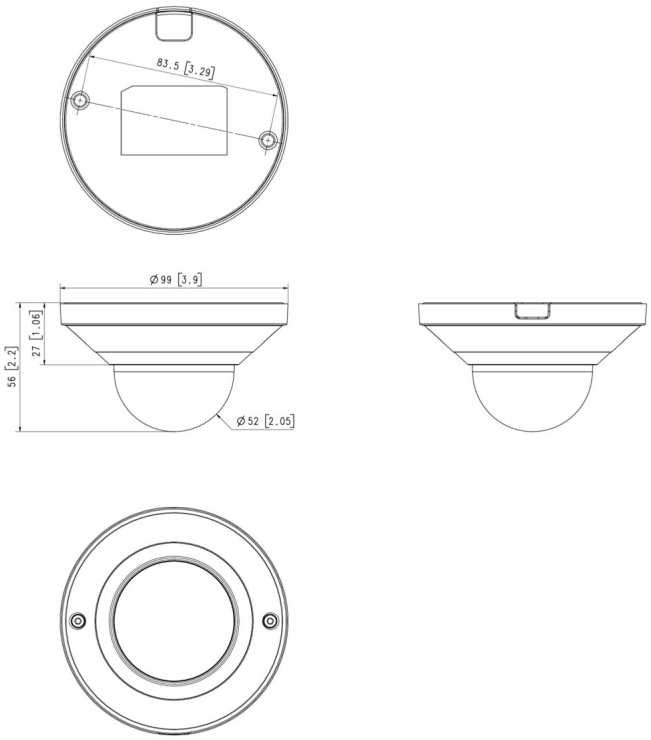

milimeter (inch)

Design and specifications are subject to change without notice. The latest product information / specification can be found at HanwhaVision.com
Hanwha Vision is formerly known as Hanwha Techwin.

© Hanwha Vision CO., LTD. All rights reserved.