

Network Dome

QND-8011

5M H.265 Dome Camera(Q mini)

Key Features

- Max. 5Megapixel (2592 x 1944) resolution
- 2.8mm fixed lens
- 0.15Lux (Color), WDR (120dB)
- Max. 30fps@5MP (H.265 / H.264)
- H.265, H.264, MJPEG codec support, Multiple streaming
- Tampering, Motion detection, Defocus detection
- Micro SD / SDHC / SDXC memory slot (Max. 128GB)
- Hallway view, WiseStream II support
- LDC, PoE

Design and specifications are subject to change without notice. The latest product information / specification can be found at HanwhaVision.com
Hanwha Vision is formerly known as Hanwha Techwin.

© Hanwha Vision CO., LTD. All rights reserved.

QND-8011

5M H.265 Dome Camera(Q mini)



Specifications

Video

Imaging Device	Size	1/2.8"
	Type	CMOS
Resolution		2592x1944, 2560x1440, 1920x1080, 1280x960, 1280x720, 800x600, 800x448, 720x576, 720x480, 640x480, 640x360, 320x240
Max. Framerate	H.265/H.264	30fps/25fps(60Hz/50Hz)
	MJPEG	15fps(@5MP Max. 2fps)
Min. Illumination (Lux)	Color(1/30sec, 30IRE)	0.15
	BW(1/30sec, 30IRE)	0.15
Video Out		HDMI: 1080p@30/25fps(60/50Hz)

Lens

Focal Length (mm)		2.8
Max Aperture Ratio (F number)	Wide	2.0
Angular Field of View	Horizontal	105°
	Vertical	77°
	Diagonal	137°
Focus Control		Fixed

Pan / Tilt / Rotate

Pan / Tilt / Rotate Range	Pan	0°~350°
	Tilt	0°~69°
	Rotate	0°~355°

Operational

Day & Night		Auto(Electrical)
Backlight Compensation		BLC, WDR, SSDR
Wide Dynamic Range (dB)		120
Digital Noise Reduction		SSNR
Motion Detection	Quantity	4ea
	Shape	8point Polygonal zones

Design and specifications are subject to change without notice. The latest product information / specification can be found at HanwhaVision.com
Hanwha Vision is formerly known as Hanwha Techwin.

© Hanwha Vision CO., LTD. All rights reserved.

Operational

Privacy Masking	Quantity	6ea
	Shape	Rectangular zones
Gain Control		Low, Middle, High
White Balance		ATW, AWC, Manual, Indoor, Outdoor
LDC		Support
Electronic Shutter	Mode	Minimum, Maximum, Anti flicker
	Speed Range	1/5~1/12,000sec
Video Rotation		Flip, Mirror, Hallway view(90°/270°)
Alarm Triggers		Analytics, Network disconnect
Alarm Events When Alarm Trigger Occurred		File upload(image): e-mail/FTP, Notification: e-mail, Recording: SD/SDHC/SDXC or NAS recording at event triggers, Handover: PTZ preset

Analytics

Analytics Events	Normal	Defocus detection, Motion detection, Tampering
Business Intelligence	Normal	People counting

Network

Ethernet		RJ-45(10/100BASE-T)
Video Compression		H.265: Main, H.264: Main/High,MJPEG
Smart Codec		WiseStream II
Bitrate Control		H.265/H.264: CBR or VBR, MJPEG: VBR
Streaming	Unicast	Up to 6 users
	Multicast	Support
	Multiple Streaming	Up to 3 profiles
Protocol		IPv4, IPv6, TCP/IP, UDP/IP, RTP(UDP), RTP(TCP), RTCP, RTSP, NTP, HTTP, HTTPS, SSL/TLS, DHCP, FTP, SMTP, ICMP, IGMPv2, SNMPv1/v2c/v3(MIB-2), ARP, DNS, DDNS, QoS, UPnP, Bonjour, LLDP
Application Programming Interface	ONVIF	S, G, T
	Others	SUNAPI(HTTP API), Hanwha Vision Open Platform
Direct Cloud Connection		Optional (needs gateway)

Security

OS / Firmware Protect	Encrypted firmware
User authentication	Digest authentication, Prevent brute-force attack
Network authentication	IEEE 802.1X(EAP-TLS, EAP-LEAP, EAP-PEAP, MSCHAPv2)
Secure Communication	HTTPS, WSS(WebSocket Secure), SRTP
Access Control	IP-based access control

© Hanwha Vision CO., LTD. All rights reserved.

Security

Data Protect	Encryption credentials, Encrypt compress for live recording file export
Audit	Access / System / Event Log management
Device ID	Device certificate(Hanwha Vision Root CA)
Secure Storage	SDcard partition encrypt(AES-256)

General

Memory	RAM	512MB
	Flash	256MB
Edge Storage	Micro SD/SDHC/SDXC	Max. 128GB x 1slot

Environmental & Electrical

Operating Condition	Temperature	-10°C~+40°C(+14°F~+104°F)
	Humidity	0~90% RH(non-condensing)
Storage Condition	Temperature	-30°C~+60°C(-22°F~+140°F)
	Humidity	0~90% RH(non-condensing)
Input Voltage		PoE(IEEE802.3af, Class2)
Power Consumption	PoE	Max. 5.00W, typical 4.00W

Mechanical

Color	White
Material	Plastic
RAL Code	RAL9003
Product Dimensions	ø99.0x56.0mm(ø3.9x2.2")
Product Weight	165g(0.36lb)

Certifications & Standards

Environment	IEC 62262 IK08, IEC 60529 IP42

DORI (EN62676-4 standard)

Detect (25PPM/ 8PPF)	Wide	40.2m(12.26ft)
Observe (63PPM/ 19PPF)	Wide	16.1m(4.90ft)
Recognize (125PPM/ 38PPF)	Wide	8.0m(2.45ft)
Identify (250PPM/ 76PPF)	Wide	4.0m(1.23ft)

Design and specifications are subject to change without notice. The latest product information / specification can be found at HanwhaVision.com
Hanwha Vision is formerly known as Hanwha Techwin.

© Hanwha Vision CO., LTD. All rights reserved.

QND-8011

5M H.265 Dome Camera(Q mini)



CAD

Unit: mm [inch]

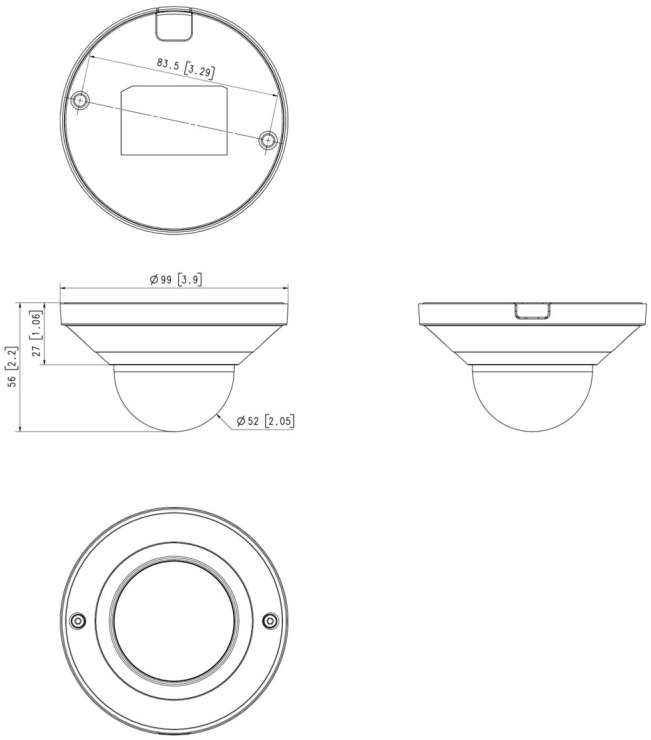

milimeter (inch)

Design and specifications are subject to change without notice. The latest product information / specification can be found at HanwhaVision.com
Hanwha Vision is formerly known as Hanwha Techwin.

© Hanwha Vision CO., LTD. All rights reserved.

Compatible Devices



SBP-300LMW

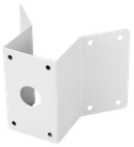

SBP-300KMW



SBP-300BW



SPG-IND16B



SBP-300PMW



SBP-300WMW



SBP-300NBW



SBP-300WMW1



SBP-300CMW

Design and specifications are subject to change without notice. The latest product information / specification can be found at HanwhaVision.com
Hanwha Vision is formerly known as Hanwha Techwin.

© Hanwha Vision CO., LTD. All rights reserved.