

Network | Fisheye

# QNF-9010

12MP Fisheye Camera

## Key Features

- Max. 3008 x 3008 resolution
- H.265, H.264, MJPEC codec
- Original fisheye view, Single panorama, Double panorama, Quad view
- WDR 120dB, WiseStreamII
- Digital PTZ
- People counting, Heatmap
- Micro SD/SDHC/SDXC 1slot 256 GB, PoE

Design and specifications are subject to change without notice. The latest product information / specification can be found at HanwhaVision.com
Hanwha Vision is formerly known as Hanwha Techwin.

© Hanwha Vision CO., LTD. All rights reserved.

# QNF-9010

12MP Fisheye Camera

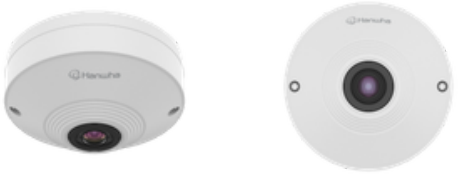

## Specifications

### Video

| | | |
|---|---|---|
| **Imaging Device** | Size | 1/2.3" |
| | Type | CMOS |
| **Resolution** | | 3200x800, 3008x3008, 2560x1920, 2560x1280, 2560x640, 1920x1440, 1920x960, 1920x480, 1280x960, 1280x640, 1280x320, 1024x768, 1024x512, 1024x256, 640x640, 640x480, 640x320 |
| **Max. Framerate** | H.265/H.264 | 30fps/25fps(60Hz/50Hz) |
| | MJPEG | 5fps |
| **Min. Illumination (Lux)** | Color(1/30sec, 30IRE) | 0.39 |
| **Video Out** | | CVBS: 1.0 Vp-p / 75Ω composite for installation |

### Lens

| | | |
|---|---|---|
| **Focal Length (mm)** | | 1.08 |
| **Max Aperture Ratio (F number)** | Wide | 2.2 |
| **Angular Field of View** | Horizontal | 187° |
| | Vertical | 187° |
| | Diagonal | 187° |
| **Min. Object Distance** | | 0.5m(1.64ft) |

### Operational

| | | |
|---|---|---|
| **Day & Night** | | Auto(Electrical) |
| **Backlight Compensation** | | BLC, WDR, SSDR |
| **Wide Dynamic Range (dB)** | | 120 |
| **Digital Noise Reduction** | | SSNR V |
| **Motion Detection** | Quantity | 4ea |
| | Shape | 8point Polygonal zones |
| **Privacy Masking** | Quantity | 6ea |
| | Shape | Rectangular zones |
| **Gain Control** | | Low, Middle, High |
| **White Balance** | | ATW, AWC, Manual, Indoor, Outdoor |

Design and specifications are subject to change without notice. The latest product information / specification can be found at HanwhaVision.com
Hanwha Vision is formerly known as Hanwha Techwin.

© Hanwha Vision CO., LTD. All rights reserved.

## Operational

| | | |
|---|---|---|
| **Electronic Shutter** | Mode | Minimum, Maximum, Anti flicker |
| | Speed Range | 2~1/12,000sec |
| **Digital PTZ** | | Support |
| **Video Rotation** | | Flip, Mirror |
| **Alarm Triggers** | | Analytics, Network disconnect |
| **Alarm Events When Alarm Trigger Occurred** | | File upload(image): e-mail/FTP,<br>Notification: e-mail,<br>Recording: SD/SDHC/SDXC or NAS recording at event triggers |

## Analytics

| | | |
|---|---|---|
| **Analytics Events** | Normal | Defocus detection, Motion detection, Tampering |
| **Business Intelligence** | Normal | People counting, Heatmap |

## Network

| | | |
|---|---|---|
| **Ethernet** | | RJ-45(10/100BASE-T) |
| **Video Compression** | | H.265: Main,<br>H.264: Main/High,MJPEG |
| **Smart Codec** | | Manual, WiseStream II |
| **Bitrate Control** | | H.265/H.264: CBR or VBR,<br>MJPEG: VBR |
| **Streaming** | Unicast | Up to 6 users |
| | Multicast | Support |
| | Multiple Streaming | Up to 3 profiles |
| **Protocol** | | IPv4, IPv6, TCP/IP, UDP/IP, RTP(UDP), RTP(TCP), RTCP, RTSP, NTP, HTTP, HTTPS, SSL/TLS, DHCP, FTP, SMTP, ICMP, IGMPv2, SNMPv1/v2c/v3(MIB-2), ARP, DNS, DDNS, QoS, UPnP, Bonjour |
| **Application Programming Interface** | ONVIF | S, G, T |
| | Others | SUNAPI(HTTP API), Hanwha Vision Open Platform |
| **Direct Cloud Connection** | | Support |

## Security

| | |
|---|---|
| **User authentication** | Digest authentication |
| **Network authentication** | IEEE 802.1X(EAP-TLS, EAP-LEAP) |
| **Secure Communication** | HTTPS |
| **Access Control** | IP-based access control |
| **Audit** | Access / System / Event Log management |
| **Device ID** | Device certificate(Hanwha Vision Root CA) |
| **Secure Storage** | SDcard partition encrypt(AES-256) |



© Hanwha Vision CO., LTD. All rights reserved.

## General

| | | |
|---|---|---|
| **Memory** | RAM | 2GB |
| | Flash | 256MB |
| **Edge Storage** | Micro SD/SDHC/SDXC | Max. 256GB x 1slot |

## Environmental & Electrical

| | | |
|---|---|---|
| **Operating Condition** | Temperature | -10°C~+40°C(+14°F~+104°F) |
| | Humidity | 0~90% RH(non-condensing) |
| **Storage Condition** | Temperature | -50°C~+60°C(-58°F~+140°F) |
| | Humidity | 0~90% RH(non-condensing) |
| **Input Voltage** | | PoE(IEEE802.3af, Class3) |
| **Power Consumption** | PoE | Max. 7.7W, typical 6.4W |

## Mechanical

| | |
|---|---|
| **Color** | White |
| **Material** | Plastic |
| **RAL Code** | RAL9003 |
| **Product Dimensions** | Ø99x49mm(Ø3.89x1.93") |
| **Product Weight** | 370g(0.82lb) |

## Certifications & Standards

| | |
|---|---|
| **EMC** | EN 50121-4, FCC 47 CFR 15 Subpart B Class A, ICES-3(A)/NMB-3(A), CE/UKCA - EN55032 Class A, EN 50130-4, EN 61000-3-2, EN 61000-3-3, VCCI CISPR 32 Class A, RCM AS-NZS CISPR 32 Class A, KS C 9832 Class A, KS C 9835 |
| **Safety** | UL 62368-1, CAN/CSA C22.2 NO. 62368-1, IEC 62471 |
| **Environment** | IEC/EN 63000, IEC 60529 IP42 |

## DORI (EN62676-4 standard)

| | | |
|---|---|---|
| **Detect (25PPM/ 8PPF)** | Wide | 34.9m(114.49ft) |
| **Observe (63PPM/ 19PPF)** | Wide | 13.9m(45.60ft) |
| **Recognize (125PPM/ 38PPF)** | Wide | 7.0m(22.96ft) |
| **Identify (250PPM/ 76PPF)** | Wide | 3.5m(11.48ft) |

Design and specifications are subject to change without notice. The latest product information / specification can be found at HanwhaVision.com
Hanwha Vision is formerly known as Hanwha Techwin.

© Hanwha Vision CO., LTD. All rights reserved.

# QNF-9010

12MP Fisheye Camera



## CAD

**Unit:** mm [inch]

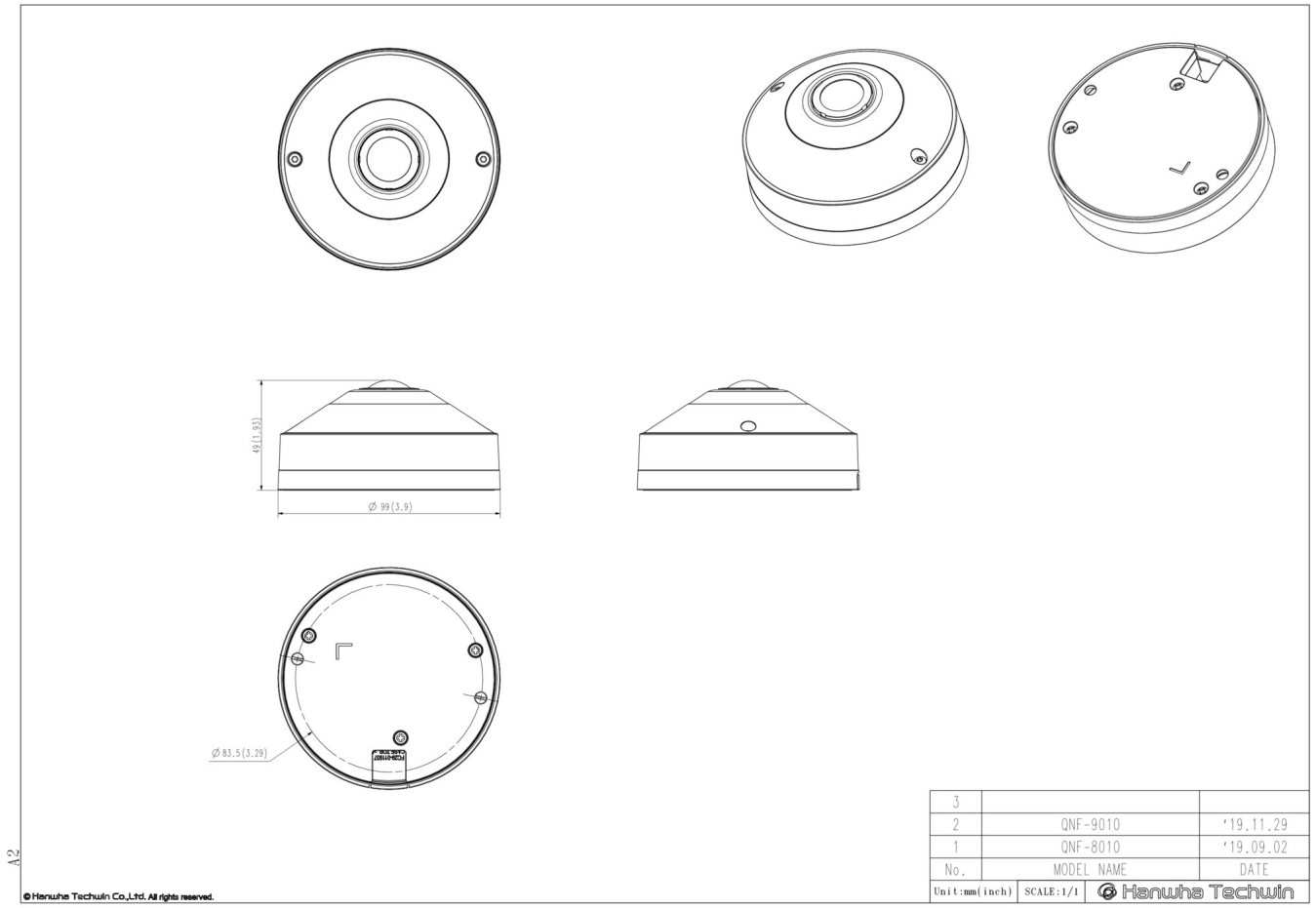


Design and specifications are subject to change without notice. The latest product information / specification can be found at HanwhaVision.com
Hanwha Vision is formerly known as Hanwha Techwin.

© Hanwha Vision CO., LTD. All rights reserved.

## Compatible Devices



SBP-300LMW

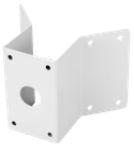

SBP-300KMW



SBP-300BW



SBP-300PMW



SBP-300WMW



SBP-300NBW



SBP-300WMW1



SBP-300CMW

Design and specifications are subject to change without notice. The latest product information / specification can be found at HanwhaVision.com
Hanwha Vision is formerly known as Hanwha Techwin.

© Hanwha Vision CO., LTD. All rights reserved.