

Network Bullet

QNO-7012R

4MP IR Bullet Camera

Key Features

- Maximum 4MP resolution
- Color : 0.15Lux (F2.0, 1/30sec) B/W : 0Lux (IR LED On)
- 2.8mm fixed focal
- H.265, H.264, MJPEG codec supported, Multiple streaming
- Motion detection, Tampering, Defocus detection
- Hallway view (90°/270°), LDC support
- Micro SD/SDHC/SDXC memory slot (128GB)
- IR viewable length 20m (65.62ft)
- IP66, IK10, PoE, 12VDC

Design and specifications are subject to change without notice. The latest product information / specification can be found at HanwhaVision.com
Hanwha Vision is formerly known as Hanwha Techwin.

© Hanwha Vision CO., LTD. All rights reserved.

QNO-7012R

4MP IR Bullet Camera



Specifications

Video

Imaging Device	Size	1/3"
	Type	CMOS
Resolution		2560x1440, 1920x1080, 1280x960, 1280x720, 800x600, 800x448, 720x576, 720x480, 640x480, 640x360, 320x240
Max. Framerate	H.265/H.264	30fps/25fps(60Hz/50Hz)
	MJPEG	15fps(@4MP Max. 2fps)
Min. Illumination (Lux)	Color(1/30sec, 30IRE)	0.15
	BW(1/30sec, 30IRE)	0.015
Video Out		CVBS: 1.0 Vp-p / 75Ω composite for installation

Lens

Focal Length (mm)		2.8
Max Aperture Ratio (F number)	Wide	2.0
Angular Field of View	Horizontal	108°
	Vertical	60°
	Diagonal	122°
Focus Control		Fixed

Pan / Tilt / Rotate

Pan / Tilt / Rotate Range	Pan	0°~360°
	Tilt	0°~100°
	Rotate	0°~360°

Operational

Day & Night		Auto(ICR)
Backlight Compensation		BLC, WDR, SSDR
Wide Dynamic Range (dB)		120
Digital Noise Reduction		SSNR
Motion Detection	Quantity	4ea
	Shape	8point Polygonal zones

Design and specifications are subject to change without notice. The latest product information / specification can be found at HanwhaVision.com
Hanwha Vision is formerly known as Hanwha Techwin.

© Hanwha Vision CO., LTD. All rights reserved.

Operational

Privacy Masking	Quantity	6ea
	Shape	Rectangular zones
Gain Control		Low, Middle, High
White Balance		ATW, AWC, Manual, Indoor, Outdoor
LDC		Support
Electronic Shutter	Mode	Minimum, Maximum, Anti flicker
	Speed Range	1/5~1/12,000sec
Video Rotation		Flip, Mirror, Hallway view(90°/270°)
Alarm Interface	In/Out	Input 1ea, Output 1ea
Alarm Triggers		Analytics, Network disconnect, Alarm input
Alarm Events When Alarm Trigger Occurred		File upload(image): e-mail/FTP, Notification: e-mail, Recording: SD/SDHC/SDXC or NAS recording at event triggers,Alarm output, Handover: PTZ preset
Audio In		Selectable(mic in/line in)
Light Type		IR LED
Light Viewable Length	IR	20m(65.62ft)
IR Wavelength		850nm

Analytics

Analytics Events	Normal	Defocus detection, Motion detection, Tampering, Virtual area(Intrusion, Enter/Exit), Virtual line(Crossing, Direction)

Network

Ethernet		RJ-45(10/100BASE-T)
Video Compression		H.265: Main, H.264: Main/High,MJPEG
Audio Compression		G.711 u-law /G.726 selectable, G.726(ADPCM) 8kHz, G.711 8kHz, G.726: 16kbps, 24kbps, 32kbps, 40kbps
Smart Codec		Manual, WiseStream II
Bitrate Control		H.265/H.264: CBR or VBR, MJPEG: VBR
Streaming	Unicast	Up to 6 users
	Multicast	Support
	Multiple Streaming	Up to 3 profiles
Protocol		IPv4, IPv6, TCP/IP, UDP/IP, RTP(UDP), RTP(TCP), RTCP, RTSP, NTP, HTTP, HTTPS, SSL/TLS, DHCP, FTP, SMTP, ICMP, IGMPv2, SNMPv1/v2c/v3(MIB-2), ARP, DNS, DDNS, QoS, UPnP, Bonjour, LLDP, SRTP(TCP, UDP Unicast), PPPoE, PIM-SM
Application Programming Interface	ONVIF	S, G, T
	Others	SUNAPI(HTTP API)
Direct Cloud Connection		Optional (needs gateway)

© Hanwha Vision CO., LTD. All rights reserved.

Security

OS / Firmware Protect	Encrypted firmware
User authentication	Digest authentication, Prevent brute-force attack
Network authentication	IEEE 802.1X(EAP-TLS, EAP-LEAP, EAP-PEAP, MSCHAPv2)
Secure Communication	HTTPS, WSS(WebSocket Secure), SRTP
Access Control	IP-based access control
Data Protect	Encryption credentials, Encrypt compress for live recording file export
Audit	Access / System / Event Log management
Device ID	Device certificate(Hanwha Vision Root CA)
Secure Storage	SDcard partition encrypt(AES-256)

General

Memory	RAM	512MB
	Flash	256MB
Edge Storage	Micro SD/SDHC/SDXC	Max. 128GB x 1slot

Environmental & Electrical

Operating Condition	Temperature	-40°C~+55°C(-40°F~+131°F)
	Humidity	0~95% RH(non-condensing)
	Others	Start up should be done at above -30°C
Storage Condition	Temperature	-40°C~+60°C(-40°F~+140°F)
	Humidity	0~95% RH(non-condensing)
Input Voltage		PoE(IEEE802.3af, Class3), 12VDC
Power Consumption	PoE	Max. 10.7W, typical 8W
	12VDC	Max. 9.1W, typical 6.8W

Mechanical

Color	Dark grey
Material	Aluminum
Product Dimensions	ø70.0x246.0mm(2.76x9.69")
Product Weight	700g(1.54lb)
Compatible Gang Box	Single, Double, 4" Octagon

Certifications & Standards

EMC	FCC 47 CFR 15 Subpart B Class A, ICES-3(A)/NMB-3(A), CE/UKCA - EN55032 Class A, EN 50130-4, EN 61000-3-2, EN 61000-3-3, VCCI CISPR 32 Class A, RCM AS-NZS CISPR 32 Class A, KS C 9832 Class A, KS C 9835
Safety	UL 60950-1, CAN/CSA C22.2 NO. 60950-1, IEC 62471
Environment	IEC/EN 63000, IEC 60529 IP66, IEC 62262 IK10

Design and specifications are subject to change without notice. The latest product information / specification can be found at HanwhaVision.com
Hanwha Vision is formerly known as Hanwha Techwin.

© Hanwha Vision CO., LTD. All rights reserved.

DORI (EN62676-4 standard)

Detect (25PPM/ 8PPF)	Wide	37.5m(123.17ft)
Observe (63PPM/ 19PPF)	Wide	15.0m(49.27ft)
Recognize (125PPM/ 38PPF)	Wide	7.5m(24.63ft)
Identify (250PPM/ 76PPF)	Wide	3.8m(12.32ft)

Design and specifications are subject to change without notice. The latest product information / specification can be found at HanwhaVision.com
Hanwha Vision is formerly known as Hanwha Techwin.

© Hanwha Vision CO., LTD. All rights reserved.

QNO-7012R

4MP IR Bullet Camera



CAD

Unit: mm [inch]

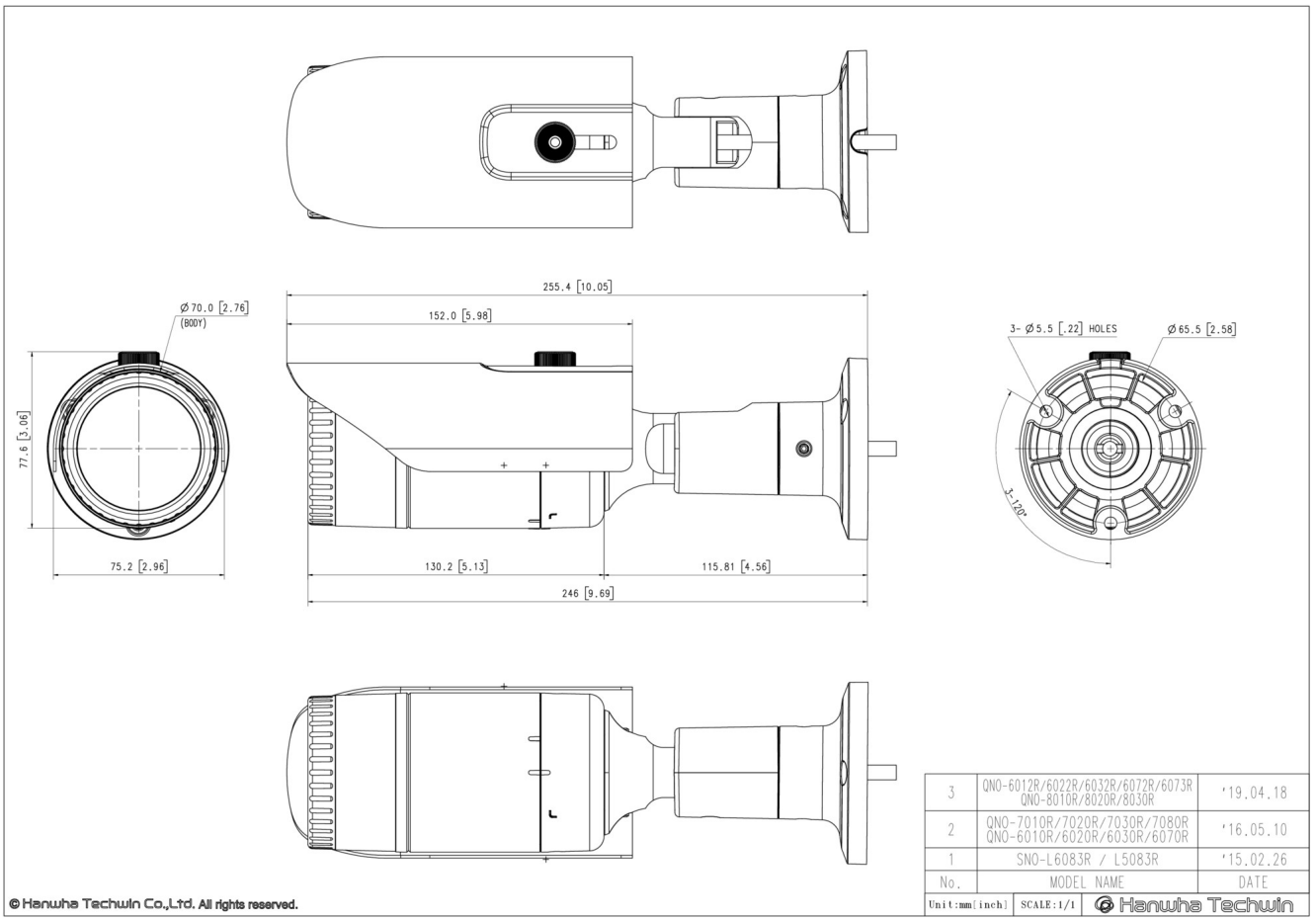

Design and specifications are subject to change without notice. The latest product information / specification can be found at HanwhaVision.com
Hanwha Vision is formerly known as Hanwha Techwin.

© Hanwha Vision CO., LTD. All rights reserved.