

Network | Цилиндрические

QNO-8080R

5M H.265 IR Bullet Camera

Key Features

- Max. 5Megapixel (2592 x 1944) resolution
- 3.2~10mm(3.1x) motorized varifocal lens
- 0.15Lux (Color), 0Lux (B/W, IR LED on)
- H.265, H.264, MJPEG codec support, Multiple streaming
- Day&Night (ICR), WDR (120dB)
- Tampering, Motion detection, Defocus detection
- Micro SD / SDHC / SDXC memory slot (Max. 128GB)
- Hallway view, WiseStream II support
- IR Viewable length 30m (98.42ft)
- IP66, IK10, PoE

Design and specifications are subject to change without notice. The latest product information / specification can be found at HanwhaVision.com
Hanwha Vision is formerly known as Hanwha Techwin.

© Hanwha Vision CO., LTD. All rights reserved.

QNO-8080R

5M H.265 IR Bullet Camera



Specifications

Video

Imaging Device	Size	1/2.8"
	Type	CMOS
Resolution		2592x1944, 2560x1440, 1920x1080, 1280x960, 1280x720, 800x600, 800x448, 720x576, 720x480, 640x480, 640x360, 320x240
Max. Framerate	H.265/H.264	30fps/25fps(60Hz/50Hz)
	MJPEG	15fps(@5MP Max. 2fps)
Min. Illumination (Lux)	Color(1/30sec, 30IRE)	0.15
	BW(1/30sec, 30IRE)	0.015
Video Out		CVBS: 1.0 Vp-p / 75Ω composite for installation

Lens

Focal Length (mm)		3.2~10
Zoom Ratio	Optical	3.1x
Max Aperture Ratio (F number)	Wide	1.6
	Tele	2.9
Angular Field of View	Horizontal	101°~31°
	Vertical	73°~23°
	Diagonal	134°~38°
Focus Control		Simple focus
Lens Type		DC auto iris(IR corrected)

Pan / Tilt / Rotate

Pan / Tilt / Rotate Range	Pan	0°~360°
	Tilt	0°~100°
	Rotate	0°~360°

Operational

Day & Night	Auto(ICR)
Backlight Compensation	BLC, WDR, SSDR
Wide Dynamic Range (dB)	120

Design and specifications are subject to change without notice. The latest product information / specification can be found at HanwhaVision.com
Hanwha Vision is formerly known as Hanwha Techwin.

© Hanwha Vision CO., LTD. All rights reserved.

Operational

Digital Noise Reduction		SSNR
Motion Detection	Quantity	4ea
	Shape	8point Polygonal zones
Privacy Masking	Quantity	6ea
	Shape	Rectangular zones
Gain Control		Low, Middle, High
White Balance		ATW, AWC, Manual, Indoor, Outdoor
LDC		Support
Electronic Shutter	Mode	Minimum, Maximum, Anti flicker
	Speed Range	1/5~1/12,000sec
Video Rotation		Flip, Mirror, Hallway view(90°/270°)
Alarm Interface	In/Out	Input 1ea, Output 1ea
Alarm Triggers		Analytics, Network disconnect, Alarm input
Alarm Events When Alarm Trigger Occurred		File upload(image): e-mail/FTP, Notification: e-mail, Recording: SD/SDHC/SDXC or NAS recording at event triggers,Alarm output, Handover: PTZ preset
Light Type		IR LED
Light Viewable Length	IR	30m(98.42ft)
IR Wavelength		850nm

Analytics

Analytics Events	Normal	Defocus detection, Motion detection, Tampering, Virtual area(Intrusion, Enter/Exit), Virtual line(Crossing, Direction)

Network

Ethernet		RJ-45(10/100BASE-T)
Video Compression		H.265: Main, H.264: Main/High,MJPEG
Smart Codec		WiseStream II
Bitrate Control		H.265/H.264: CBR or VBR, MJPEG: VBR
Streaming	Unicast	Up to 6 users
	Multicast	Support
	Multiple Streaming	Up to 3 profiles
Protocol		IPv4, IPv6, TCP/IP, UDP/IP, RTP(UDP), RTP(TCP), RTCP, RTSP, NTP, HTTP, HTTPS, SSL/TLS, DHCP, FTP, SMTP, ICMP, IGMPv2, SNMPv1/v2c/v3(MIB-2), ARP, DNS, DDNS, QoS, UPnP, Bonjour, LLDP
Application Programming Interface	ONVIF	S, G, T
	Others	SUNAPI(HTTP API), Hanwha Vision Open Platform
Direct Cloud Connection		Optional (needs gateway)

Design and specifications are subject to change without notice. The latest product information / specification can be found at HanwhaVision.com
Hanwha Vision is formerly known as Hanwha Techwin.

© Hanwha Vision CO., LTD. All rights reserved.

Security

OS / Firmware Protect	Encrypted firmware
User authentication	Digest authentication, Prevent brute-force attack
Network authentication	IEEE 802.1X(EAP-TLS, EAP-LEAP, EAP-PEAP, MSCHAPv2)
Secure Communication	HTTPS, WSS(WebSocket Secure), SRTP
Access Control	IP-based access control
Data Protect	Encryption credentials, Encrypt compress for live recording file export
Audit	Access / System / Event Log management
Device ID	Device certificate(Hanwha Vision Root CA)
Secure Storage	SDcard partition encrypt(AES-256)

General

Memory	RAM	512MB
	Flash	256MB
Edge Storage	Micro SD/SDHC/SDXC	Max. 128GB x 1slot

Environmental & Electrical

Operating Condition	Temperature	-30°C~+55°C(-22°F~+131°F)
	Humidity	0~90% RH(non-condensing)
	Others	Start up should be done at above -20°C
Storage Condition	Temperature	-30°C~+60°C(-22°F~+140°F)
	Humidity	0~90% RH(non-condensing)
Input Voltage		PoE(IEEE802.3af, Class3)
Power Consumption	PoE	Max. 9.50W, typical 7.30W

Mechanical

Color	Dark grey
Material	Aluminum
Product Dimensions	ø91x322.9mm(35.8x12.71")
Product Weight	1190g(2.62lb)

Certifications & Standards

Environment	IEC 60529 IP66, IEC 62262 IK10

DORI (EN62676-4 standard)

Detect (25PPM/ 8PPF)	Wide	43.3m(141.94ft)
	Tele	185.7m(609.09ft)
Observe (63PPM/ 19PPF)	Wide	17.3m(56.78ft)
	Tele	74.3m(243.64ft)

Design and specifications are subject to change without notice. The latest product information / specification can be found at HanwhaVision.com
Hanwha Vision is formerly known as Hanwha Techwin.

© Hanwha Vision CO., LTD. All rights reserved.

DORI (EN62676-4 standard)

Recognize (125PPM/ 38PPF)	Wide	8.7m(28.39ft)
	Tele	37.1m(121.82ft)
Identify (250PPM/ 76PPF)	Wide	4.3m(14.19ft)
	Tele	18.6m(60.91ft)

Design and specifications are subject to change without notice. The latest product information / specification can be found at HanwhaVision.com
Hanwha Vision is formerly known as Hanwha Techwin.

© Hanwha Vision CO., LTD. All rights reserved.

QNO-8080R

5M H.265 IR Bullet Camera



CAD

Unit: mm [inch]

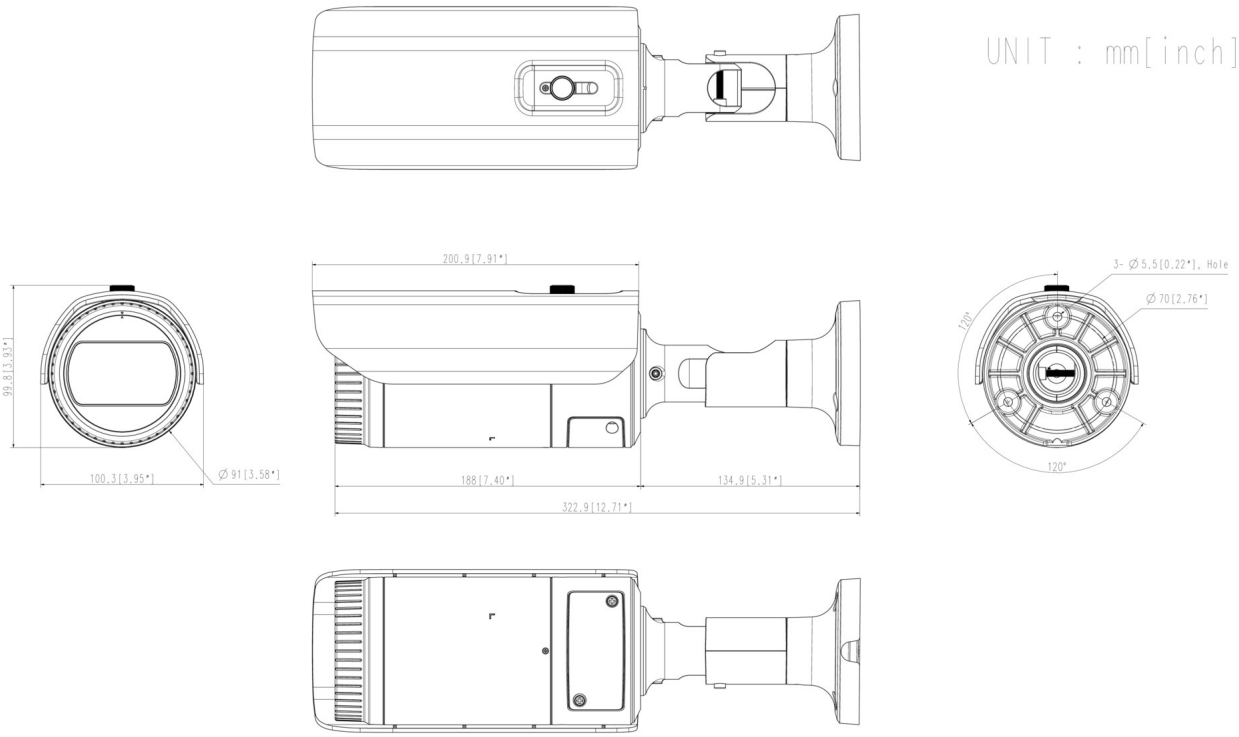

Design and specifications are subject to change without notice. The latest product information / specification can be found at HanwhaVision.com
Hanwha Vision is formerly known as Hanwha Techwin.

© Hanwha Vision CO., LTD. All rights reserved.

Compatible Devices



SBP-302PM



SBO-126B

Design and specifications are subject to change without notice. The latest product information / specification can be found at HanwhaVision.com
Hanwha Vision is formerly known as Hanwha Techwin.

© Hanwha Vision CO., LTD. All rights reserved.