Hanwha Vision




Network | Поворотные

# QNP-6230

## 2МП H.265 сетевая 23x PTZ камера

## Key Features

- Макс. разрешение 2 Мп (1920 x 1080)
- Объектив 4,44–102,2 мм с оптическим зумом 23x
- Поддержка кодеков H.265, H.264, MJPEG
- Многопотоковая передача данных, поддержка WiseStream II
- Дневной и ночной (с выдвижным ИК фильтром) режимы, WDR (120 дБ)
- Цифровая стабилизация изображения со встроенным гироскопическим датчиком
- Обнаружение внешнего воздействия, движения
- Слот для карты памяти (макс. 256 Гб)
- IP66, IK10 (только для QNP-6230 + SHP-3701H)

Design and specifications are subject to change without notice. The latest product information / specification can be found at HanwhaVision.com
Hanwha Vision is formerly known as Hanwha Techwin.

© Hanwha Vision CO., LTD. All rights reserved.

# QNP-6230

2МП H.265 сетевая 23x PTZ камера





## Specifications

### Video

| | | |
|---|---|---|
| **Imaging Device** | Size | 1/2.8" |
| | Type | CMOS |
| **Resolution** | | 1920x1080, 1280x1024, 1280x960, 1280x720, 1024x768, 800x600, 800x448, 720x576, 720x480, 640x480, 640x360, 320x240 |
| **Max. Framerate** | H.265/H.264 | 60fps/50fps(60Hz/50Hz) |
| | MJPEG | 30fps |
| **Min. Illumination (Lux)** | Color(1/30sec, 30IRE) | 0.5 |
| | BW(1/30sec, 30IRE) | 0.005 |
| **Video Out** | | CVBS: 1.0 Vp-p / 75Ω composite for installation |

### Lens

| | | |
|---|---|---|
| **Focal Length (mm)** | | 4.44~102.2 |
| **Zoom Ratio** | Optical | 23x |
| | Digital | 800x |
| **Max Aperture Ratio (F number)** | Wide | 1.6 |
| | Tele | 3.6 |
| **Angular Field of View** | Horizontal | 61.8°~3.08° |
| | Vertical | 36.2°~1.73° |
| **Min. Object Distance** | | 2m(6.56ft) |
| **Focus Control** | | Auto, Manual, Oneshot AF, Focus save |
| **Lens Type** | | DC auto iris |

### Pan / Tilt / Rotate

| | | |
|---|---|---|
| **Pan / Tilt / Rotate Range** | Pan | 360° Endless |
| | Tilt | 90°~-15° |
| **Pan Speed** | Preset | Max. 500°/sec |
| | Manual | 0.024°/sec~250°/sec |
| **Tilt Speed** | Preset | Max. 500°/sec |
| | Manual | 0.024°/sec~250°/sec |
| **Sequence** | | Preset(300ea), Swing, Group(6ea), Trace, Tour, Auto Run, Schedule |

Design and specifications are subject to change without notice. The latest product information / specification can be found at HanwhaVision.com
Hanwha Vision is formerly known as Hanwha Techwin.

© Hanwha Vision CO., LTD. All rights reserved.

## Pan / Tilt / Rotate

| | |
|---|---|
| Preset Accuracy | ±0.2° |

## Operational

| | | |
|---|---|---|
| Day & Night | | Auto(ICR) |
| Backlight Compensation | | BLC, HLC, WDR, SSDR |
| Wide Dynamic Range (dB) | | 120 |
| Digital Noise Reduction | | WiseNR, SSNR V |
| Digital Image Stabilization | | Support(built-in gyro sensor) |
| Defog | | Support |
| Motion Detection | Quantity | 8ea |
| | Shape | 8point Polygonal zones |
| Privacy Masking | Quantity | 24ea |
| | Shape | Polygonal zones |
| | Color / Option | Gray, Green, Red, Blue, Black, White, Mosaic |
| Gain Control | | Low, Middle, High |
| White Balance | | ATW, AWC, Manual, Indoor, Outdoor |
| Electronic Shutter | Mode | Minimum, Maximum, Anti flicker |
| | Speed Range | 2~1/12,000sec |
| Video Rotation | | Flip&Mirror |
| Serial Interface | | RS-485(Samsung-T, Pelco-D/P, Panasonic, Bosch, AD, GE, Vicon, Honeywell) |
| Alarm Interface | In/Out | Input 4ea / Output 2ea |
| | Others | Support alarm I/O via optional I/O box |
| Alarm Triggers | | Analytics, Network disconnect, Alarm input, Time schedule |
| Alarm Events When Alarm Trigger Occurred | | File upload(image): e-mail/FTP,<br>Notification: e-mail,<br>Recording: SD/SDHC/SDXC or NAS recording at event triggers,Alarm output,<br>Handover: PTZ preset,send message by HTTP/HTTPS/TCP,Audio clip playback |
| Audio In | | Support via optional I/O box |
| Audio Out | | Support via optional I/O box |

## Analytics

| | | |
|---|---|---|
| Analytics Events | Normal | Motion detection, Tampering |

## Network

| | |
|---|---|
| Ethernet | RJ-45(10/100BASE-T) |
| Video Compression | H.265: Main,<br>H.264: Main/Baseline/High,MJPEG |
| Smart Codec | Manual, WiseStream II |
| Bitrate Control | H.265/H.264: CBR or VBR,<br>MJPEG: VBR |

Design and specifications are subject to change without notice. The latest product information / specification can be found at HanwhaVision.com
Hanwha Vision is formerly known as Hanwha Techwin.

© Hanwha Vision CO., LTD. All rights reserved.

## Network

| | | |
|---|---|---|
| **Streaming** | Unicast | Up to 10 users |
| | Multicast | Support |
| | Multiple Streaming | Up to 10 profiles |
| **Protocol** | | IPv4, IPv6, TCP/IP, UDP/IP, RTP(UDP), RTP(TCP), RTCP, RTSP, NTP, HTTP, HTTPS, SSL/TLS, DHCP, FTP, SMTP, ICMP, IGMPv2, SNMPv1/v2c/v3(MIB-2), ARP, DNS, DDNS, QoS, UPnP, Bonjour, LLDP, SRTP(TCP, UDP Unicast) |
| **Application Programming Interface** | ONVIF | S, G, T |
| | Others | SUNAPI(HTTP API), Hanwha Vision Open Platform |
| **Direct Cloud Connection** | | Optional (needs gateway) |

## Security

| | |
|---|---|
| **OS / Firmware Protect** | Encrypted firmware |
| **User authentication** | Digest authentication, Prevent brute-force attack |
| **Network authentication** | IEEE 802.1X(EAP-TLS, EAP-LEAP, EAP-PEAP, MSCHAPv2) |
| **Secure Communication** | HTTPS, WSS(WebSocket Secure), SRTP |
| **Access Control** | IP-based access control |
| **Data Protect** | Encryption credentials, Encrypt compress for live recording file export |
| **Audit** | Access / System / Event Log management |
| **Device ID** | Device certificate(Hanwha Vision Root CA) |

## General

| | | |
|---|---|---|
| **Memory** | RAM | 1GB |
| | Flash | 256MB |
| **Edge Storage** | Micro SD/SDHC/SDXC | Max. 256GB x 1slot |

## Environmental & Electrical

| | | |
|---|---|---|
| **Operating Condition** | Temperature | -35°C~+55°C(-31°F~+131°F) |
| | Humidity | 0~90% RH(non-condensing) |
| | Others | Start up should be done at above -30°C |
| **Storage Condition** | Temperature | -50°C~+60°C(-58°F~+140°F) |
| | Humidity | 0~95% RH(non-condensing) |
| **EPA(Effective Projected Area)** | | 0.035㎡ |
| **Input Voltage** | | PoE+(IEEE802.3at, Class4) |
| **Power Consumption** | 24VAC | Max 20W |

## Mechanical

| | |
|---|---|
| **Color** | Ivory |
| **Material** | Aluminum |
| **RAL Code** | RAL9003 |

Design and specifications are subject to change without notice. The latest product information / specification can be found at HanwhaVision.com
Hanwha Vision is formerly known as Hanwha Techwin.

© Hanwha Vision CO., LTD. All rights reserved.

## Mechanical

| | |
|---|---|
| **Product Dimensions** | ø158x293.3mm(6.22x11.55") |
| **Product Weight** | 3100g(6.83lb) |

## Certifications & Standards

| | |
|---|---|
| **EMC** | FCC 47 CFR 15 Subpart B Class A, CE/UKCA - EN55032 Class A, EN 50130-4, EN 61000-3-2, EN 61000-3-3, VCCI CISPR 32 Class A, RCM AS-NZS CISPR 32 Class A, IC Regulation ICES-003 Issue 7 Class A |
| **Safety** | UL 62368-1, CAN/CSA C22.2 NO. 62368-1, IEC 62471 |
| **Environment** | IEC/EN 63000, IEC 60529 IP66, IEC 62262 IK10 |

Design and specifications are subject to change without notice. The latest product information / specification can be found at HanwhaVision.com
Hanwha Vision is formerly known as Hanwha Techwin.

© Hanwha Vision CO., LTD. All rights reserved.

# QNP-6230

2МП H.265 сетевая 23x PTZ камера





## CAD

**Unit:** mm [inch]

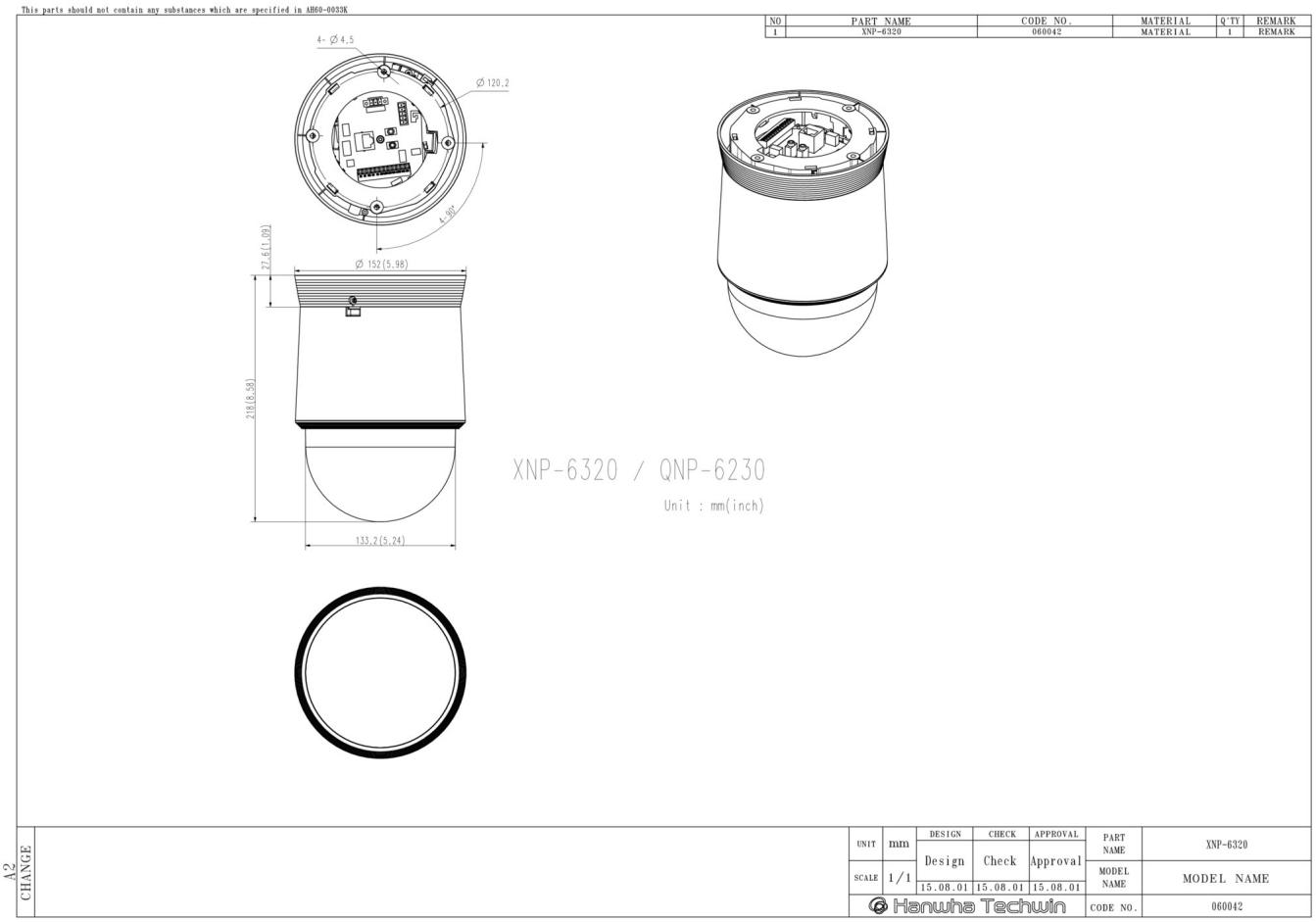


Design and specifications are subject to change without notice. The latest product information / specification can be found at HanwhaVision.com
Hanwha Vision is formerly known as Hanwha Techwin.

© Hanwha Vision CO., LTD. All rights reserved.

## Compatible Devices


SHP-1520FW


SBP-300CM


SBP-300PM


SBP-300KM


SBP-300WM1


SHP-3701H


SBP-300LM


SBP-390WM2


SBP-301HM3


SHP-3701FB


SBP-300WM


SBP-300B


SPB-PTZ6

Design and specifications are subject to change without notice. The latest product information / specification can be found at HanwhaVision.com
Hanwha Vision is formerly known as Hanwha Techwin.

© Hanwha Vision CO., LTD. All rights reserved.