

Network PTZ

QNP-6250R

2MP 25x IR PTZ Camera

Key Features

- Max. 2MP resolution
- 4.44~111mm (25x) lens
- Max. IR viewable length 100m (328.08ft)
- Day & Night (ICR), WDR, DIS (Built-in gyro sensor)
- Intelligent Analytics
- H.264, H.265, MJPEG codec, WiseStreamII
- Micro SD/SDHC/SDXC 1slot 256GB
- IP66, IK10, NEMA4X

*Available in Hanwha Vision Middle East and Africa Only - QNP-6250R/KME

Design and specifications are subject to change without notice. The latest product information / specification can be found at HanwhaVision.com
Hanwha Vision is formerly known as Hanwha Techwin.

© Hanwha Vision CO., LTD. All rights reserved.

QNP-6250R

2MP 25x IR PTZ Camera



Specifications

Video

Imaging Device	Size	1/2.8"
	Type	CMOS
Resolution		1920x1080, 1280x1024, 1280x960, 1280x720, 1024x768, 800x600, 800x448, 720x576, 720x480, 640x480, 640x360, 320x240
Max. Framerate	H.265/H.264	60fps/50fps(60Hz/50Hz)
	MJPEG	30fps
Min. Illumination (Lux)	Color(1/30sec, 30IRE)	0.05
	BW(1/30sec, 30IRE)	0.005

Lens

Focal Length (mm)		4.44~111
Zoom Ratio	Optical	25x
	Digital	32x
Max Aperture Ratio (F number)	Wide	1.6
	Tele	3.9
Angular Field of View	Horizontal	64.66°~2.99°
	Vertical	38.08°~1.68°
Min. Object Distance		1.5m(4.92ft)
Focus Control		Oneshot AF, Focus save
Lens Type		DC auto iris

Pan / Tilt / Rotate

Pan / Tilt / Rotate Range	Pan	360° Endless
	Tilt	90°~-20°
Pan Speed	Preset	Max. 700°/sec
	Manual	0.024°/sec~250°/sec
Tilt Speed	Preset	Max. 300°/sec
	Manual	0.024°/sec~250°/sec
Sequence		Preset(300ea), Swing, Group(6ea), Trace, Tour, Auto Run, Schedule
Preset Accuracy		±0.2°

Design and specifications are subject to change without notice. The latest product information / specification can be found at HanwhaVision.com
Hanwha Vision is formerly known as Hanwha Techwin.

© Hanwha Vision CO., LTD. All rights reserved.

Operational

Direction Indicator		Support
Day & Night		Auto(ICR)
Backlight Compensation		BLC, HLC, WDR, SSDR
Wide Dynamic Range (dB)		120
Digital Noise Reduction		SSNR V
Digital Image Stabilization		Support(built-in gyro sensor)
Defog		Support
Motion Detection	Quantity	8ea
	Shape	8point Polygonal zones
Privacy Masking	Quantity	32ea
	Shape	4point Quadrangle zones
	Color / Option	Gray, Green, Red, Blue, Black, White, Mosaic
Gain Control		Off, Max gain, Manual
White Balance		ATW, AWC, Manual, Indoor, Outdoor, Mercury, Sodium
Electronic Shutter	Mode	Minimum, Maximum, Anti flicker
	Speed Range	2~1/12,000sec
Video Rotation		Flip&Mirror
Alarm Interface	Others	Support alarm I/O via optional I/O box
Alarm Triggers		Analytics, Network disconnect
Alarm Events When Alarm Trigger Occurred		File upload(image): e-mail/FTP, Notification: e-mail, Recording: SD/SDHC/SDXC or NAS recording at event triggers,Alarm output, Handover: PTZ preset,send message by HTTP/HTTPS/TCP
Light Type		IR LED
Light Viewable Length	IR	100m(328.08ft)
IR Wavelength		850nm
Auto Tracking		Support

Analytics

Analytics Events	Normal	Motion detection, Tampering, Audio detection, Virtual area(Lotering, Intrusion, Enter/Exit, Appear/Disappear), Virtual line(Crossing, Direction)

Network

Ethernet	Metal shielded RJ-45(10/100BASE-T)
Video Compression	H.265: Main, H.264: Main/High,MJPEG
Smart Codec	Manual, WiseStream II
Bitrate Control	H.265/H.264: CBR or VBR, MJPEG: VBR

Design and specifications are subject to change without notice. The latest product information / specification can be found at HanwhaVision.com
Hanwha Vision is formerly known as Hanwha Techwin.

© Hanwha Vision CO., LTD. All rights reserved.

Network

Streaming	Unicast	Up to 20 users
	Multicast	Support
	Multiple Streaming	Up to 10 profiles
Protocol		IPv4, IPv6, TCP/IP, UDP/IP, RTP(UDP), RTP(TCP), RTCP, RTSP, NTP, HTTP, HTTPS, SSL/TLS, DHCP, FTP, SMTP, ICMP, IGMPv2, SNMPv1/v2c/v3(MIB-2), ARP, DNS, DDNS, QoS, UPnP, Bonjour, LLDP, SRTP(TCP, UDP Unicast), NTCIP 1205
Application Programming Interface	ONVIF	S, G, T
	Others	SUNAPI(HTTP API), Hanwha Vision Open Platform
Direct Cloud Connection		Optional (needs gateway)

Security

OS / Firmware Protect	Encrypted firmware
User authentication	Digest authentication, Prevent brute-force attack
Network authentication	IEEE 802.1X(EAP-TLS, EAP-LEAP, EAP-PEAP, MSCHAPv2)
Secure Communication	HTTPS, WSS(WebSocket Secure), SRTP
Access Control	IP-based access control
Data Protect	Encryption credentials, Encrypt compress for live recording file export
Audit	Access / System / Event Log management
Device ID	Device certificate(Hanwha Vision Root CA)

General

Memory	RAM	1GB
	Flash	256MB
Edge Storage	Micro SD/SDHC/SDXC	Max. 256GB x 1slot

Environmental & Electrical

Operating Condition	Temperature	-35°C~+55°C(-31°F~+131°F)
	Humidity	0~100% RH(condensing)
	Others	Start up should be done at above -30°C
Storage Condition	Temperature	-50°C~+60°C(-58°F~+140°F)
	Humidity	0~95% RH(non-condensing)
Input Voltage		PoE+(IEEE802.3at, Class4)
Power Consumption	PoE	Max. 25.5W, typical 14.7W

Mechanical

Color	White
Material	Aluminum, Hard-coated dome
RAL Code	RAL9003
Product Dimensions	ø158x293.3mm(6.22x11.55")

Design and specifications are subject to change without notice. The latest product information / specification can be found at HanwhaVision.com
Hanwha Vision is formerly known as Hanwha Techwin.

© Hanwha Vision CO., LTD. All rights reserved.

Mechanical

Product Weight	3100g(6.83lb)

Certifications & Standards

EMC	FCC 47 CFR 15 Subpart B Class A, CE/UKCA - EN55032 Class A, EN 50130-4, EN 61000-3-2, EN 61000-3-3, VCCI CISPR 32 Class A, RCM AS-NZS CISPR 32 Class A, IC Regulation ICES-003 Issue 7 Class A
Safety	UL 62368-1, CAN/CSA C22.2 NO. 62368-1, IEC 62471
Environment	IEC/EN 63000, IEC 60529 IP66, IEC 62262 IK10

DORI (EN62676-4 standard)

Detect (25PPM/ 8PPF)	Wide	60.7m(199.1ft)
	Tele	1471.3m(4827.2ft)
Observe (63PPM/ 19PPF)	Wide	24.3m(79.6ft)
	Tele	588.5m(1930.9ft)
Recognize (125PPM/ 38PPF)	Wide	12.1m(39.8ft)
	Tele	294.3m(965.4ft)
Identify (250PPM/ 76PPF)	Wide	6.1m(19.9ft)
	Tele	147.1m(482.7ft)

Design and specifications are subject to change without notice. The latest product information / specification can be found at HanwhaVision.com
Hanwha Vision is formerly known as Hanwha Techwin.

© Hanwha Vision CO., LTD. All rights reserved.

QNP-6250R

2MP 25x IR PTZ Camera



CAD

Unit: mm [inch]

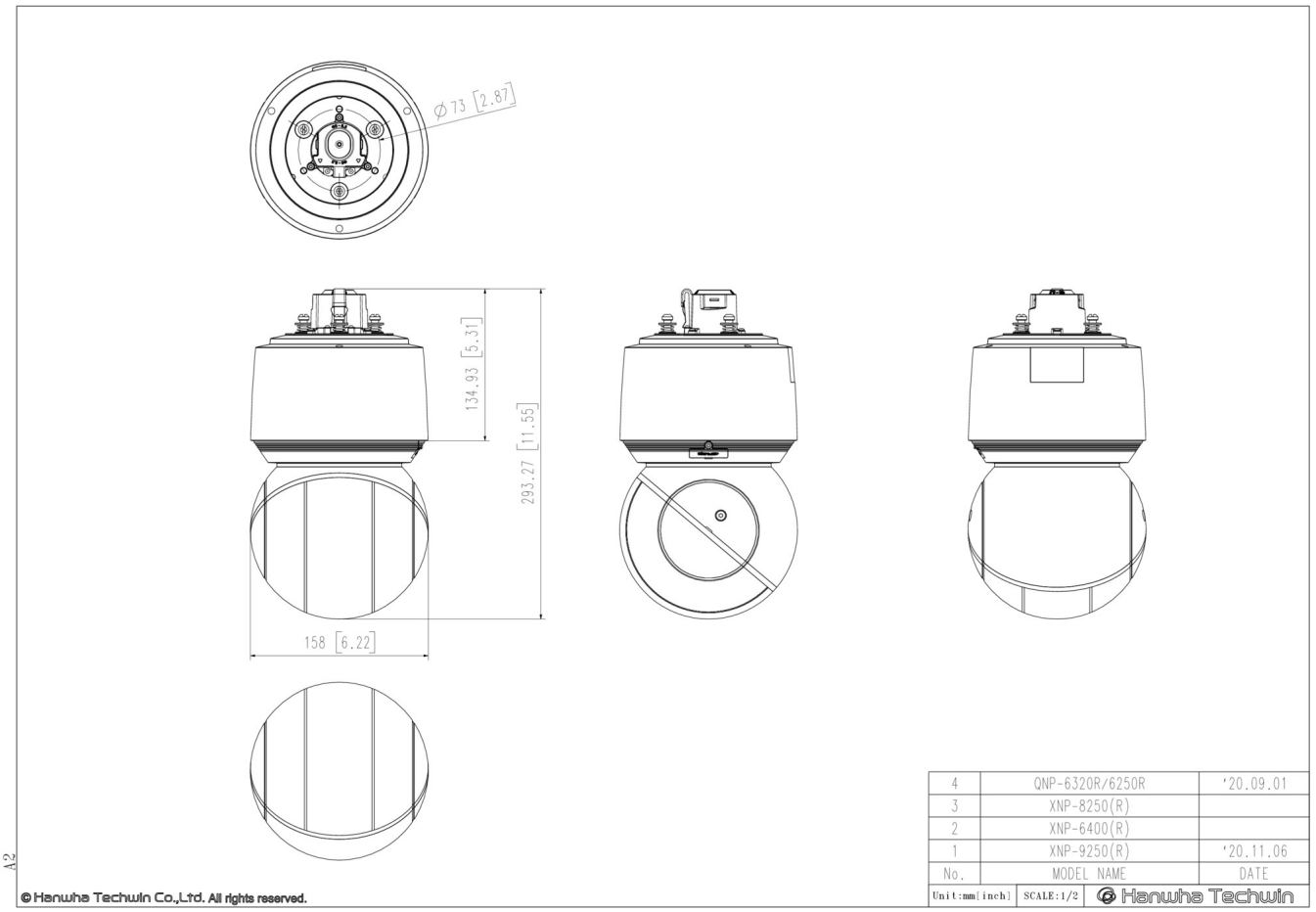

Design and specifications are subject to change without notice. The latest product information / specification can be found at HanwhaVision.com
Hanwha Vision is formerly known as Hanwha Techwin.

© Hanwha Vision CO., LTD. All rights reserved.