Hanwha Vision



Network Dome

QNV-6072R

2M H.265 IR Dome Camera

Key Features

- Max. 2megapixel (1920 x 1080) resolution
- 0.03lux (Color), 0Lux (B/W, IR LED on)
- 2.7 ~ 12mm (4.4x) varifocal lens
- Max. 30fps@2M all resolutions (H.265/H.264)
- H.265, H.264, MJPEG codec supported, Multiple streaming
- Motion detection, Tampering, Defocus detection
- Hallway view (90°/270°), LDC support
- Micro SD/SDHC/SDXC memory slot (Max. 128GB)
- IR viewable length 30m
- IP66, IK10, PoE/12VDC

*Available in Hanwha Techwin Middle east and Africa Only - QNV-6072R/KME

Design and specifications are subject to change without notice. The latest product information / specification can be found at HanwhaVision.com
Hanwha Vision is formerly known as Hanwha Techwin.

© Hanwha Vision CO., LTD. All rights reserved.

QNV-6072R

2M H.265 IR Dome Camera



Specifications

Video

Imaging Device	Size	1/2.8"
	Type	CMOS
Resolution		1920x1080, 1280x960, 1280x720, 800x600, 800x448, 720x576, 720x480, 640x480, 640x360
Max. Framerate	H.265/H.264	30fps/25fps(60Hz/50Hz)
	MJPEG	15fps(@2MP Max. 4fps)
Min. Illumination (Lux)	Color(1/30sec, 30IRE)	0.03
	BW(1/30sec, 30IRE)	0.003
Video Out		CVBS: 1.0 Vp-p / 75Ω composite for installation

Lens

Focal Length (mm)		3.2~10
Zoom Ratio	Optical	3.1x
Max Aperture Ratio (F number)	Wide	1.6
	Tele	2.9
Angular Field of View	Horizontal	109°~33°
	Vertical	58°~18°
	Diagonal	132°~38°
Min. Object Distance		0.5m(1.64ft)
Focus Control		Manual
Lens Type		DC auto iris

Pan / Tilt / Rotate

Pan / Tilt / Rotate Range	Pan	0°~350°
	Tilt	0°~67°
	Rotate	0°~355°

Operational

Day & Night	Auto(ICR)
Backlight Compensation	BLC, WDR, SSDR

Design and specifications are subject to change without notice. The latest product information / specification can be found at HanwhaVision.com
Hanwha Vision is formerly known as Hanwha Techwin.

© Hanwha Vision CO., LTD. All rights reserved.

Operational

Wide Dynamic Range (dB)		120
Digital Noise Reduction		SSNR
Motion Detection	Quantity	4ea
	Shape	8point Polygonal zones
Privacy Masking	Quantity	6ea
	Shape	Rectangular zones
Gain Control		Low, Middle, High
White Balance		ATW, AWC, Manual, Indoor, Outdoor
LDC		Support
Electronic Shutter	Mode	Minimum, Maximum, Anti flicker
	Speed Range	1/5~1/12,000sec
Video Rotation		Flip, Mirror, Hallway view(90°/270°)
Alarm Interface	In/Out	Input 1ea, Output 1ea
Alarm Triggers		Analytics, Network disconnect, Alarm input
Alarm Events When Alarm Trigger Occurred		File upload(image): e-mail/FTP, Notification: e-mail, Recording: SD/SDHC/SDXC or NAS recording at event triggers,Alarm output, Handover: PTZ preset
Audio In		Selectable(mic in/line in)
Light Type		IR LED
Light Viewable Length	IR	30m(98.42ft)
IR Wavelength		850nm

Analytics

Analytics Events	Normal	Defocus detection, Motion detection, Tampering, Virtual area(Intrusion, Enter/Exit), Virtual line(Crossing, Direction)

Network

Ethernet		RJ-45(10/100BASE-T)
Video Compression		H.265: Main, H.264: Main/High,MJPEG
Audio Compression		G.711 u-law /G.726 selectable, G.726(ADPCM) 8kHz, G.711 8kHz, G.726: 16kbps, 24kbps, 32kbps, 40kbps
Smart Codec		WiseStream II
Bitrate Control		H.265/H.264: CBR or VBR, MJPEG: VBR
Streaming	Unicast	Up to 6 users
	Multicast	Support
	Multiple Streaming	Up to 3 profiles

Design and specifications are subject to change without notice. The latest product information / specification can be found at HanwhaVision.com
Hanwha Vision is formerly known as Hanwha Techwin.

© Hanwha Vision CO., LTD. All rights reserved.

Network

Protocol		IPv4, IPv6, TCP/IP, UDP/IP, RTP(UDP), RTP(TCP), RTCP, RTSP, NTP, HTTP, HTTPS, SSL/TLS, DHCP, FTP, SMTP, ICMP, IGMPv2, SNMPv1/v2c/v3(MIB-2), ARP, DNS, DDNS, QoS, UPnP, Bonjour, LLDP
Application Programming Interface	ONVIF	S, G, T
	Others	SUNAPI(HTTP API), Hanwha Vision Open Platform
Direct Cloud Connection		Optional (needs gateway)

Security

OS / Firmware Protect	Encrypted firmware
User authentication	Digest authentication, Prevent brute-force attack
Network authentication	IEEE 802.1X(EAP-TLS, EAP-LEAP, EAP-PEAP, MSCHAPv2)
Secure Communication	HTTPS, WSS(WebSocket Secure), SRTP
Access Control	IP-based access control
Data Protect	Encryption credentials, Encrypt compress for live recording file export
Audit	Access / System / Event Log management
Device ID	Device certificate(Hanwha Vision Root CA)
Secure Storage	SDcard partition encrypt(AES-256)

General

Memory	RAM	512MB
	Flash	256MB
Edge Storage	Micro SD/SDHC/SDXC	Max. 128GB x 1slot

Environmental & Electrical

Operating Condition	Temperature	-30°C~+55°C(-22°F~+131°F)
	Humidity	0~90% RH(non-condensing)
	Others	Start up should be done at above -20°C
Storage Condition	Temperature	-30°C~+60°C(-22°F~+140°F)
	Humidity	0~90% RH(non-condensing)
Input Voltage		PoE(IEEE802.3af, Class3), 12VDC
Power Consumption	PoE	Max. 7.70W, typical 6.00W
	12VDC	Max. 6.50W, typical 5.10W

Mechanical

Color	White
Material	Aluminum
RAL Code	RAL9003
Product Dimensions	ø137.0x106.1mm(ø5.39x4.18")
Product Weight	710g(1.57lb)

Design and specifications are subject to change without notice. The latest product information / specification can be found at HanwhaVision.com
Hanwha Vision is formerly known as Hanwha Techwin.

© Hanwha Vision CO., LTD. All rights reserved.

Mechanical

Compatible Gang Box	Single, Double, 4" Octagon

Certifications & Standards

EMC	FCC 47 CFR 15 Subpart B Class A, ICES-3(A)/NMB-3(A), CE/UKCA - EN55032 Class A, EN 50130-4, EN 61000-3-2, EN 61000-3-3, VCCI CISPR 32 Class A, RCM AS-NZS CISPR 32 Class A, KS C 9832 Class A, KS C 9835
Safety	UL 60950-1, CAN/CSA C22.2 NO. 60950-1, IEC 62471
Environment	IEC/EN 63000, IEC 60529 IP66, IEC 62262 IK10

DORI (EN62676-4 standard)

Detect (25PPM/ 8PPF)	Wide	27.4m(89.85ft)
	Tele	128.8m(422.56ft)
Observe (63PPM/ 19PPF)	Wide	11.0m(35.94ft)
	Tele	51.5m(169.02ft)
Recognize (125PPM/ 38PPF)	Wide	5.5m(17.97ft)
	Tele	25.8m(84.51ft)
Identify (250PPM/ 76PPF)	Wide	2.7m(8.99ft)
	Tele	12.9m(42.26ft)

Design and specifications are subject to change without notice. The latest product information / specification can be found at HanwhaVision.com
Hanwha Vision is formerly known as Hanwha Techwin.

© Hanwha Vision CO., LTD. All rights reserved.

QNV-6072R

2M H.265 IR Dome Camera



CAD

Unit: mm [inch]

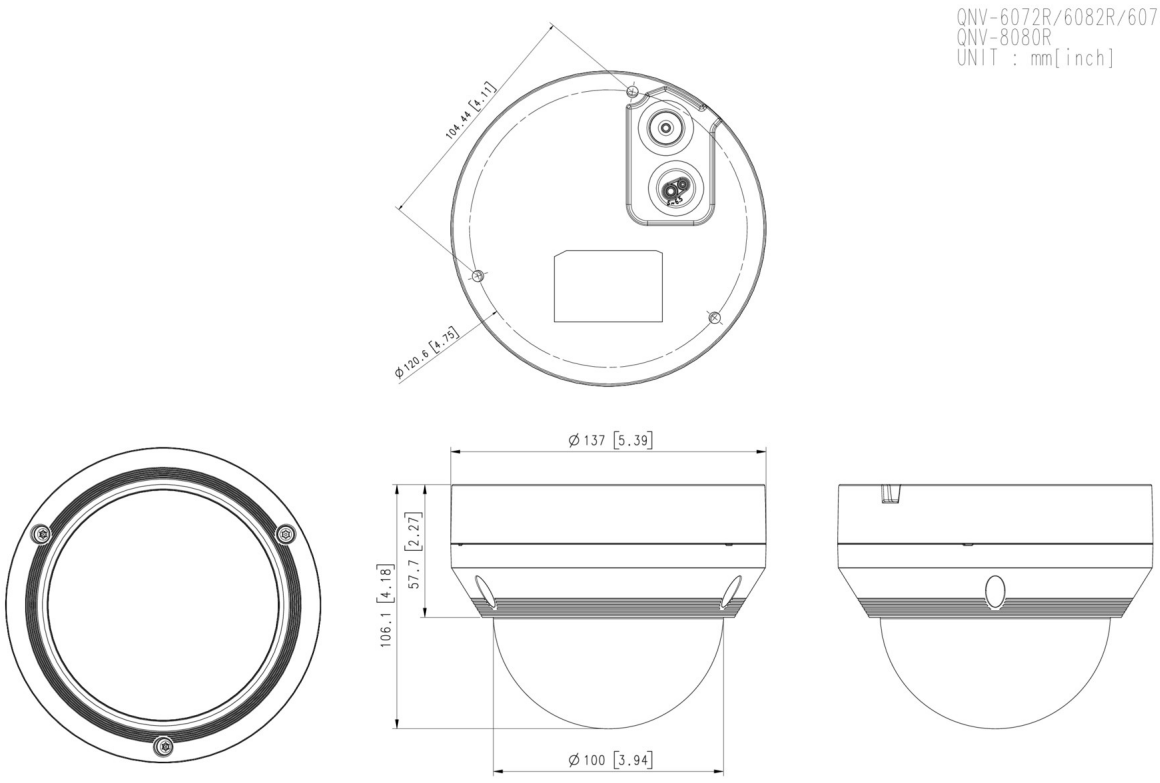

Design and specifications are subject to change without notice. The latest product information / specification can be found at HanwhaVision.com
Hanwha Vision is formerly known as Hanwha Techwin.

© Hanwha Vision CO., LTD. All rights reserved.

Compatible Devices


SBP-300LMW


SBP-301HMW2

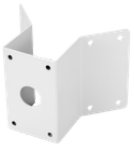
SBP-300KMW


SBP-300BW


SBP-300PMW


SBV-136BW


SBP-300WMW


SHD-1408FW


SBP-300NBW


SBP-300WMW1


SPB-VAW72


SBP-137WMW1


SBP-300CMW

Design and specifications are subject to change without notice. The latest product information / specification can be found at HanwhaVision.com
Hanwha Vision is formerly known as Hanwha Techwin.

© Hanwha Vision CO., LTD. All rights reserved.