

Network Dome

QNV-C9011R

8MP AI IR Micro Vandal Dome Camera

Key Features

- Max. 8MP resolution
- 3.0 mm fixed lens
- Color: 0.03Lux(F1.6, 1/30sec),
BW: 0.003Lux(F1.6, 1/30sec, 30IRE)
- Maximum 30fps@5MP (H.265/H.264)
- IR viewable length 20m (65.62ft)
- Day & Night (ICR), WDR (120dB), WiseNR II (Using AI engine)
- Hard-coated dome bubble
- H.265, H.264, MJPEG, WiseStreamIII (Using AI engine)
- Analytics events based on AI engine (NPU) : Object detection
(Person/Vehicle - car, truck, bus, bicycle, motorcycle),
Motion detection, Virtual line(Crossing/Direction),
Virtual area(Loitering/Intrusion/Enter/Exit)
- IP66, IK10, NEMA4X
- PoE: Max 8.5W

Design and specifications are subject to change without notice. The latest product information / specification can be found at HanwhaVision.com
Hanwha Vision is formerly known as Hanwha Techwin.

© Hanwha Vision CO., LTD. All rights reserved.

QNV-C9011R

8MP AI IR Micro Vandal Dome Camera



Specifications

Video

Imaging Device	Size	1/2.8"
	Type	CMOS
Resolution		3840x2160, 3328x1872, 3072x1728, 2688x1520, 2592x1944, 1920x1080, 1600x1200, 1280x1024, 1280x960, 1280x720, 1024x768, 800x600, 800x448, 720x576, 720x480, 640x480, 640x360, 320x240
Max. Framerate	H.265/H.264	30fps/25fps(60Hz/50Hz)
	MJPEG	30fps(@8MP Max. 5fps)
Min. Illumination (Lux)	Color(1/30sec, 30IRE)	0.03
	BW(1/30sec, 30IRE)	0.003
Video Out		USB: Micro USB Type B. Preview and installation ONLY. Requires WiFi dongle.

Lens

Focal Length (mm)		3.0
Max Aperture Ratio (F number)	Wide	1.6
Angular Field of View	Horizontal	108°
	Vertical	59°
	Diagonal	127°
Min. Object Distance		0.5m(1.64ft)
Focus Control		Fixed
Lens Type		Fixed iris
Mount Type		M12

Pan / Tilt / Rotate

Pan / Tilt / Rotate Range	Pan	0°~350°
	Tilt	-35°~70°
	Rotate	0°~355°

Operational

Day & Night	Auto(ICR)
Backlight Compensation	BLC, WDR, SSDR

Design and specifications are subject to change without notice. The latest product information / specification can be found at HanwhaVision.com
Hanwha Vision is formerly known as Hanwha Techwin.

© Hanwha Vision CO., LTD. All rights reserved.

Operational

Wide Dynamic Range (dB)		120
Digital Noise Reduction		WiseNR II (Based on AI engine), SSNR V
Motion Detection	Quantity	8ea
	Shape	8point Polygonal zones
Privacy Masking	Quantity	32ea
	Shape	4point Quadrangle zones
	Color / Option	Gray, Green, Red, Blue, Black, White
	Dynamic Privacy Masking: Color / Option	Mosaic
Gain Control		Low, Middle, High
White Balance		ATW, AWC, Manual, Indoor, Outdoor
LDC		Support
Electronic Shutter	Mode	Minimum, Maximum, Anti flicker, Prefer shutter control(Based on AI engine)
	Speed Range	1/5~1/25,000sec
Video Rotation		Flip, Mirror, Hallway view(90°/270°)
Alarm Triggers		Analytics, Network disconnect, MQTT subscription
Alarm Events When Alarm Trigger Occurred		File upload(image): e-mail/FTP, Notification: e-mail, Recording: SD/SDHC/SDXC or NAS recording at event triggers, Handover: PTZ preset,send message by HTTP/HTTPS/TCP, MQTT: publication
Light Type		IR LED
Light Viewable Length	IR	20m(65.62ft)
IR Wavelength		850nm

Analytics

Classified Object Type		Person, Vehicle
Attributes	Person	Upper/Lower clothes color
	Vehicle	Type(car, bus, truck, motorcycle, bicycle), Color
Thumbnail		BestShot
Analytics Events	Based on AI Engine	Object detection, Virtual line(Crossing/Direction), Virtual area(Loitering/Intrusion/Enter/Exit), Motion detection
	Normal	Defocus detection, Tampering, Virtual area(Appear/Disappear)
Business Intelligence	Based on AI Engine	People counting, Queue management, Heatmap, Vehicle counting

Network

Ethernet	RJ-45(10/100BASE-T)
Video Compression	H.265: Main, H.264: Main/High,MJPEG
Smart Codec	Manual, WiseStreamIII

Design and specifications are subject to change without notice. The latest product information / specification can be found at HanwhaVision.com
Hanwha Vision is formerly known as Hanwha Techwin.

© Hanwha Vision CO., LTD. All rights reserved.

Network

Bitrate Control		H.265/H.264: CBR or VBR, MJPEG: VBR
Streaming	Unicast	Up to 20 users
	Multicast	Support
	Multiple Streaming	Up to 5 profiles
Protocol		IPv4, IPv6, TCP/IP, UDP/IP, RTP(UDP), RTP(TCP), RTCP, RTSP, NTP, HTTP, HTTPS, SSL/TLS, DHCP, FTP, SFTP, SMTP, ICMP, IGMPv2, SNMPv1/v2c/v3(MIB-2), ARP, DNS, DDNS, QoS, UPnP, Bonjour, LLDP, CDP, SRTP(TCP, UDP Unicast), MQTT
Application Programming Interface	ONVIF	S, G, T, M
	Others	SUNAPI(HTTP API), Hanwha Vision Open Platform
Direct Cloud Connection		Support

Security

OS / Firmware Protect	Encrypted firmware, Secure boot, Signed firmware
User authentication	Digest authentication, Prevent brute-force attack
Network authentication	IEEE 802.1X(EAP-TLS, EAP-LEAP, EAP-PEAP, MSCHAPv2)
Secure Communication	HTTPS, WSS(WebSocket Secure), SRTP
Access Control	IP-based access control
Data Protect	Encryption credentials, Encrypt compress for live recording file export
Audit	Access / System / Event Log management
Device ID	Device certificate(Hanwha Vision Root CA)
Secure Storage	SDcard partition encrypt(AES-256)

General

Memory	RAM	2GB
	Flash	1GB
Edge Storage	Micro SD/SDHC/SDXC	Max. 256GB x 1slot
Edge Storage(OnCloud)	Micro SD/SDHC/SDXC	Max. 1TB x 1slot *Hanwha Vision branded microSD cards have been certified and recommended for OnCloud edge recording.

Environmental & Electrical

Operating Condition	Temperature	-40°C~+55°C(-40°F~+131°F)
	Humidity	0~100% RH(condensing)
	Others	Start up should be done at above -30°C, Humidity control with AIR vent
Storage Condition	Temperature	-50°C~+60°C(-58°F~+140°F)
	Humidity	0~95% RH(non-condensing)
Input Voltage		PoE(IEEE802.3af, Class3)
Power Consumption	PoE	Max. 8.5W, typical 4.9W

Design and specifications are subject to change without notice. The latest product information / specification can be found at HanwhaVision.com
Hanwha Vision is formerly known as Hanwha Techwin.

© Hanwha Vision CO., LTD. All rights reserved.

Mechanical

Color	White
Material	Aluminum
RAL Code	RAL9003
Product Dimensions	ø110x77mm(ø4.33x3.03")
Product Weight	522g(1.15lb)
Compatible Gang Box	Single, Double, 4" Octagon

Certifications & Standards

EMC	FCC 47 CFR 15 Subpart B Class A, ICES-3(A)/NMB-3(A), CE/UKCA - EN55032 Class A, EN 50130-4, EN 61000-3-2, EN 61000-3-3, VCCI CISPR 32 Class A, RCM AS-NZS CISPR 32 Class A, KS C 9832 Class A, KS C 9835
Safety	UL 62368-1, CAN/CSA C22.2 NO. 62368-1, IEC 62471
Environment	IEC/EN 63000, IEC 60529 IP66, IEC 62262 IK10

DORI (EN62676-4 standard)

Detect (25PPM/ 8PPF)	Wide	55.8m(183.07ft)
Observe (63PPM/ 19PPF)	Wide	22.5m(73.23ft)
Recognize (125PPM/ 38PPF)	Wide	11.2m(36.61ft)
Identify (250PPM/ 76PPF)	Wide	5.6m(18.31ft)

Design and specifications are subject to change without notice. The latest product information / specification can be found at HanwhaVision.com
Hanwha Vision is formerly known as Hanwha Techwin.

© Hanwha Vision CO., LTD. All rights reserved.

QNV-C9011R

8MP AI IR Micro Vandal Dome Camera



CAD

Unit: mm [inch]

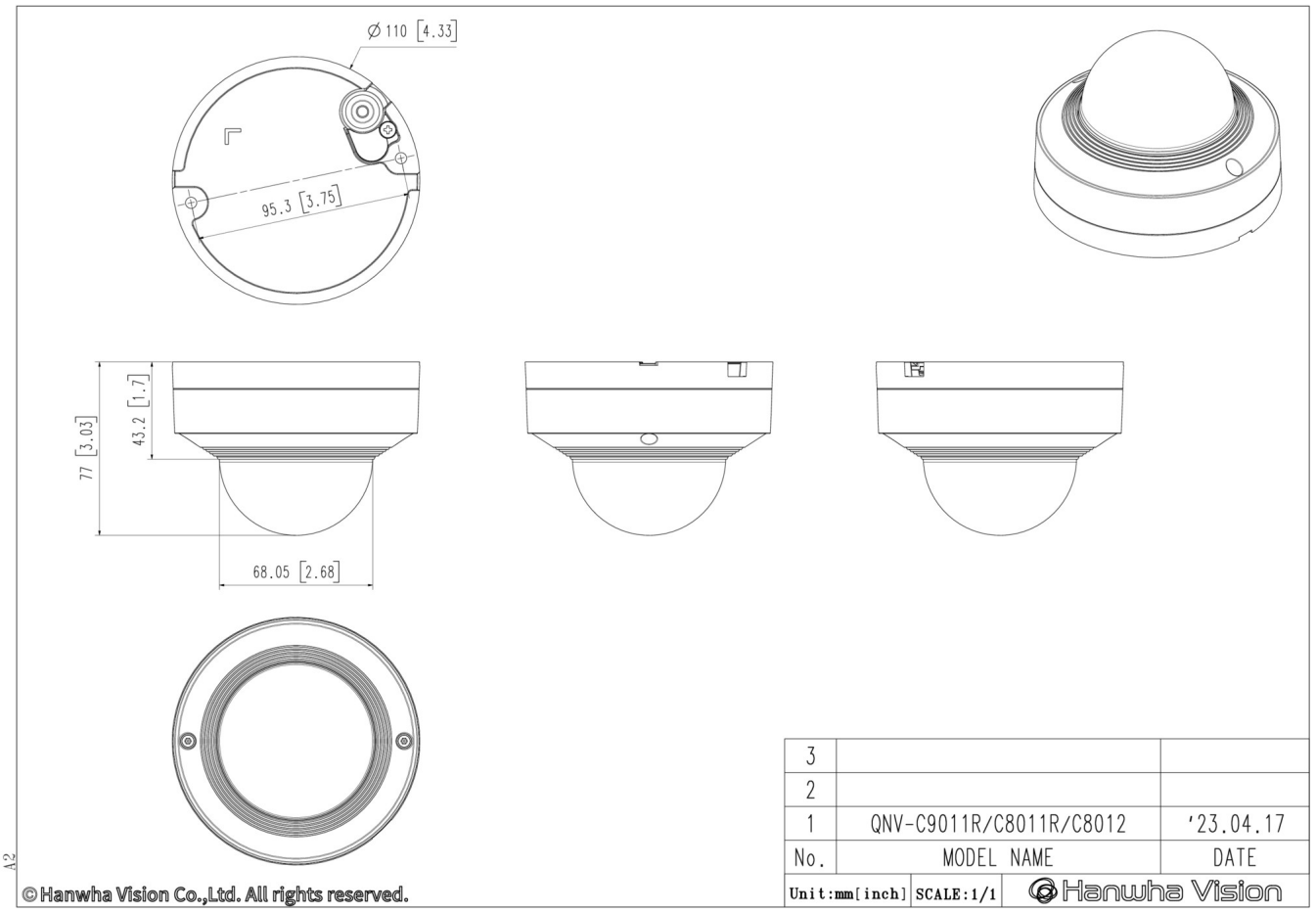

© Hanwha Vision CO., LTD. All rights reserved.