

SBO-BPM0

BCR Camera Bracket

Key Features

- Material: Stainless(SUS316L)
- Mount Screw size(Hexagonal screw): 6mm
- Max. load: 5kg
- Adjustment Angle: 0 ~ 120°
- Supported products: TNS-7000M

Design and specifications are subject to change without notice. The latest product information / specification can be found at HanwhaVision.com
Hanwha Vision is formerly known as Hanwha Techwin.

© Hanwha Vision CO., LTD. All rights reserved.

SBO-BPM0

BCR Camera Bracket



Specifications

Mechanical

Color	Silver
Material	Stainless(SUS316L)
Product dimensions / weight	W55mm * H63mm * D59mm / 190g
Adjustment Angle	0 ~ 120°
Mount Screw size	Hexagonal screw, 6mm
Max. load	5kg
Supported products	TNS-7000M

Design and specifications are subject to change without notice. The latest product information / specification can be found at HanwhaVision.com
Hanwha Vision is formerly known as Hanwha Techwin.

© Hanwha Vision CO., LTD. All rights reserved.

SBO-BPM0

BCR Camera Bracket



CAD

Unit: mm [inch]

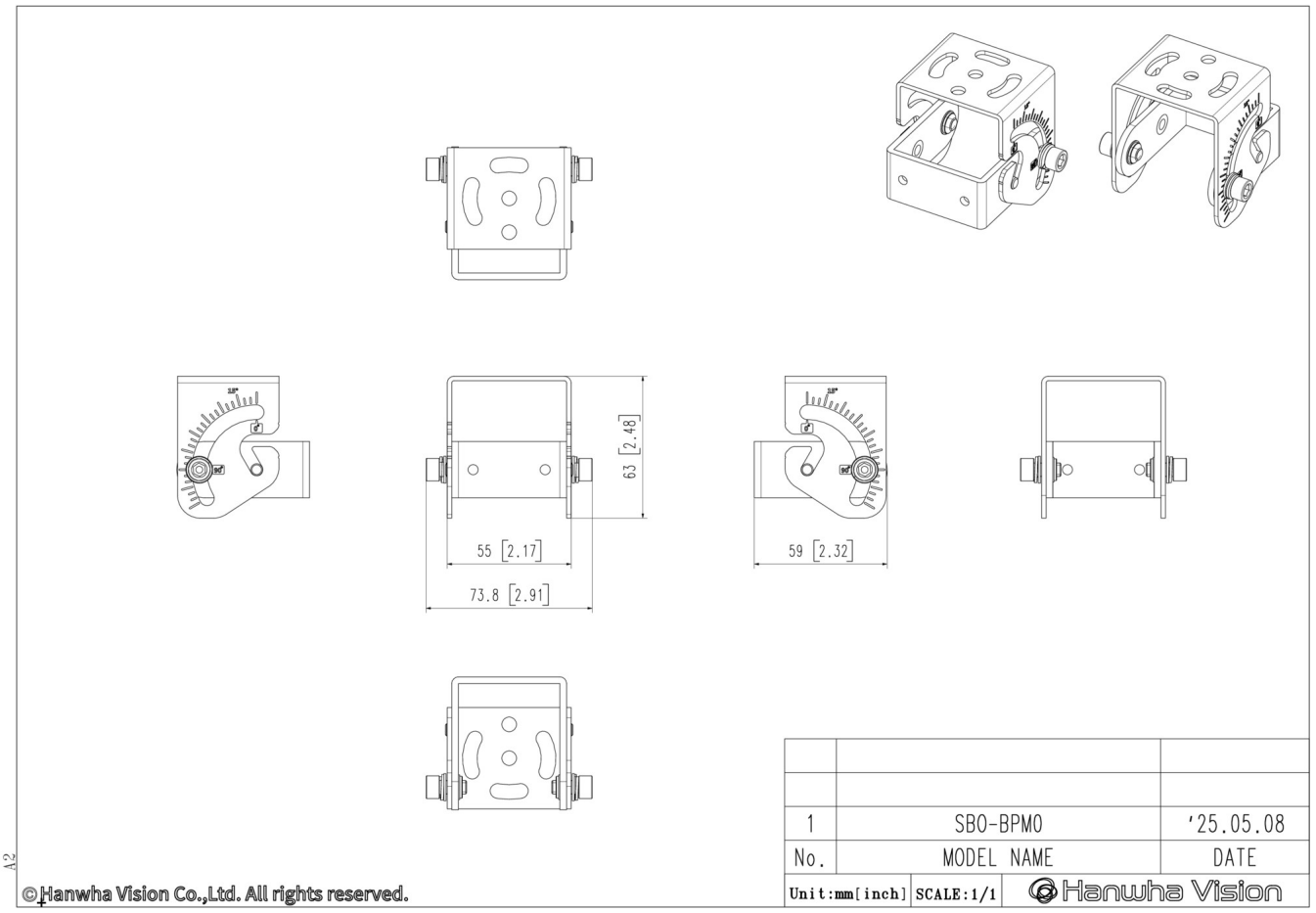

Design and specifications are subject to change without notice. The latest product information / specification can be found at HanwhaVision.com
Hanwha Vision is formerly known as Hanwha Techwin.

© Hanwha Vision CO., LTD. All rights reserved.