SBP-160HMW1

White Cap Adapter

Key Features

- Mount thread size : PF 1 1/2" Male
- Aluminum, White
- Mount screw size : TR20
- Replacement for SBP-167HMW

Design and specifications are subject to change without notice. The latest product information / specification can be found at HanwhaVision.com
Hanwha Vision is formerly known as Hanwha Techwin.

© Hanwha Vision CO., LTD. All rights reserved.

SBP-160HMW1

White Cap Adapter

Specifications

Mechanical

Color	White
Material	PC(Polycarbonate), Aluminum
RAL code	RAL9003
Product dimensions / weight	ø175x67mm / 320g
Mount Screw size	TR20
Max. load	5kg
Supported products	XND-C6083RV, XND-C7083RV, XND-C8083RV, XND-C9083RV ※ For further compatible models, please visit our website or use Toolbox

Design and specifications are subject to change without notice. The latest product information / specification can be found at HanwhaVision.com
Hanwha Vision is formerly known as Hanwha Techwin.

© Hanwha Vision CO., LTD. All rights reserved.

SBP-160HMW1

White Cap Adapter

CAD

Unit: mm [inch]

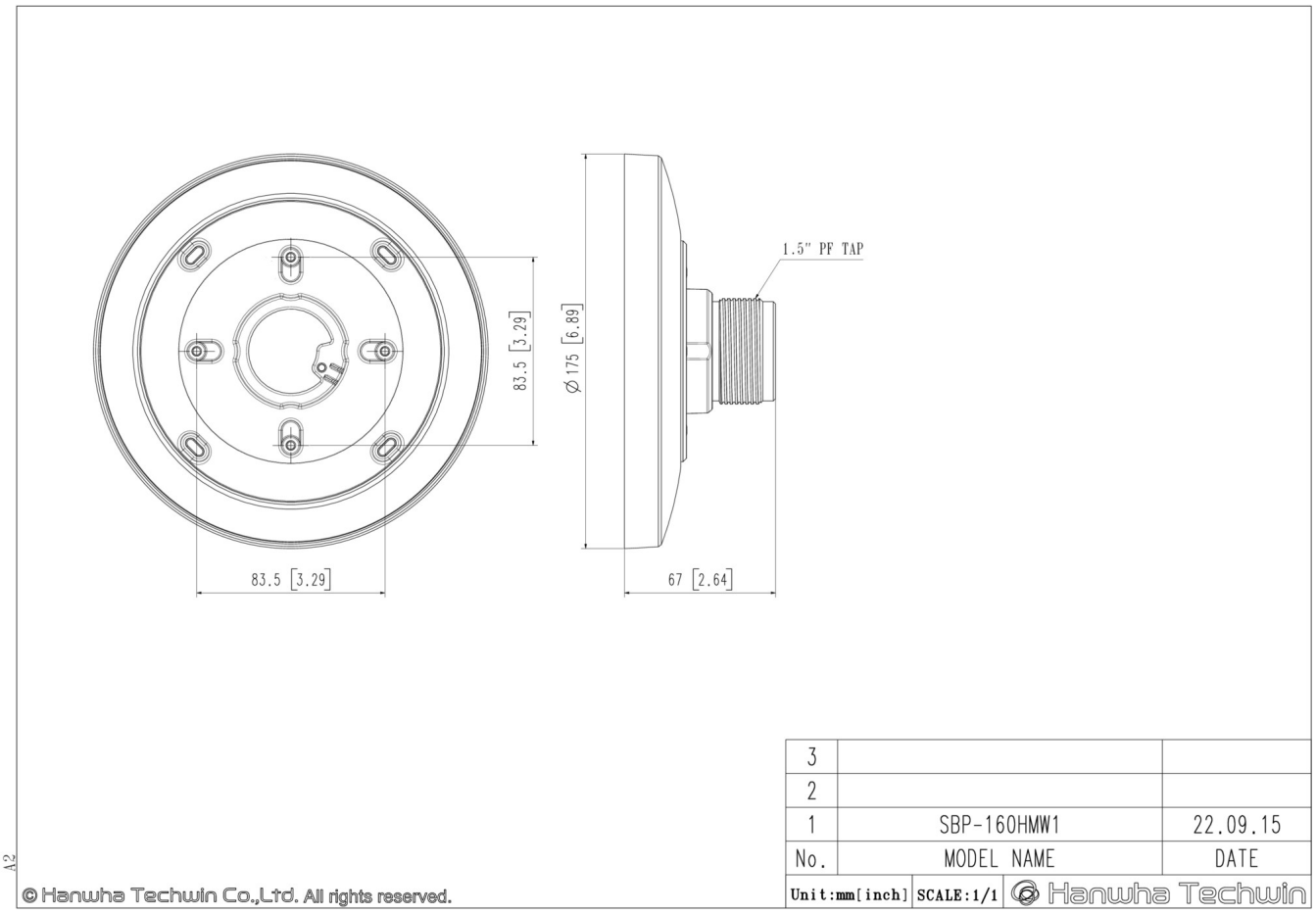

© Hanwha Vision CO., LTD. All rights reserved.