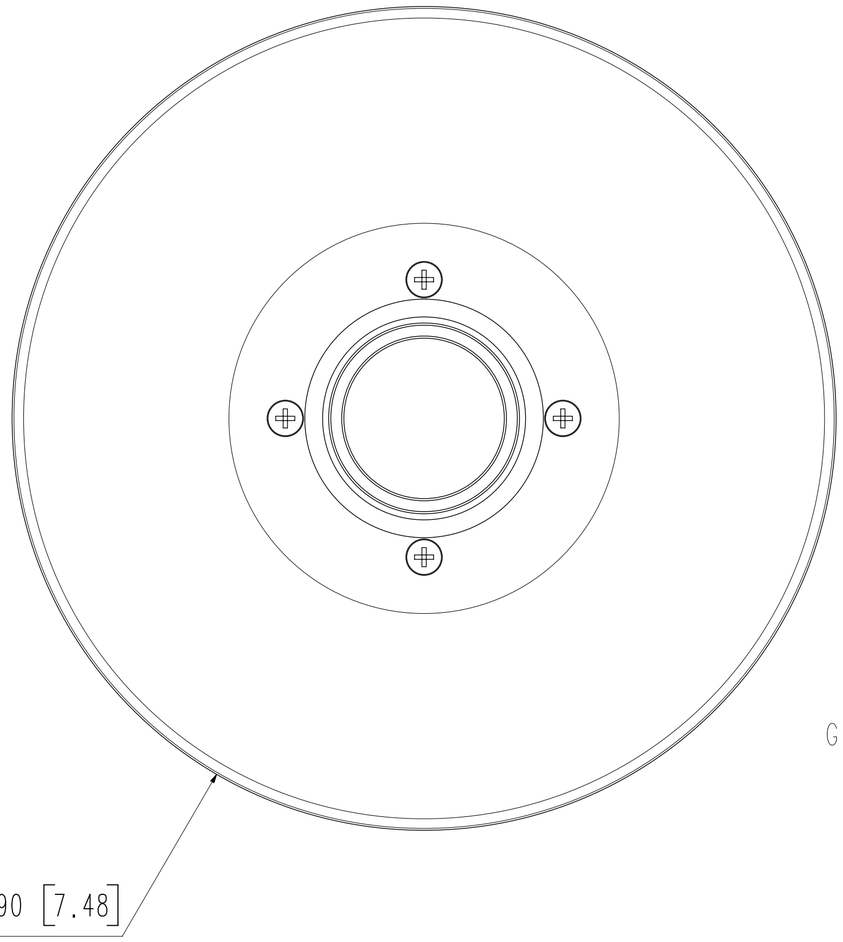


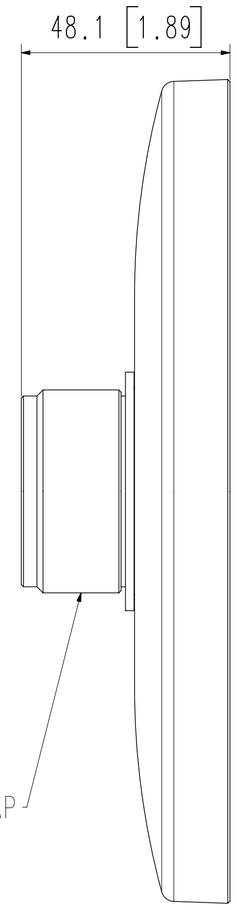


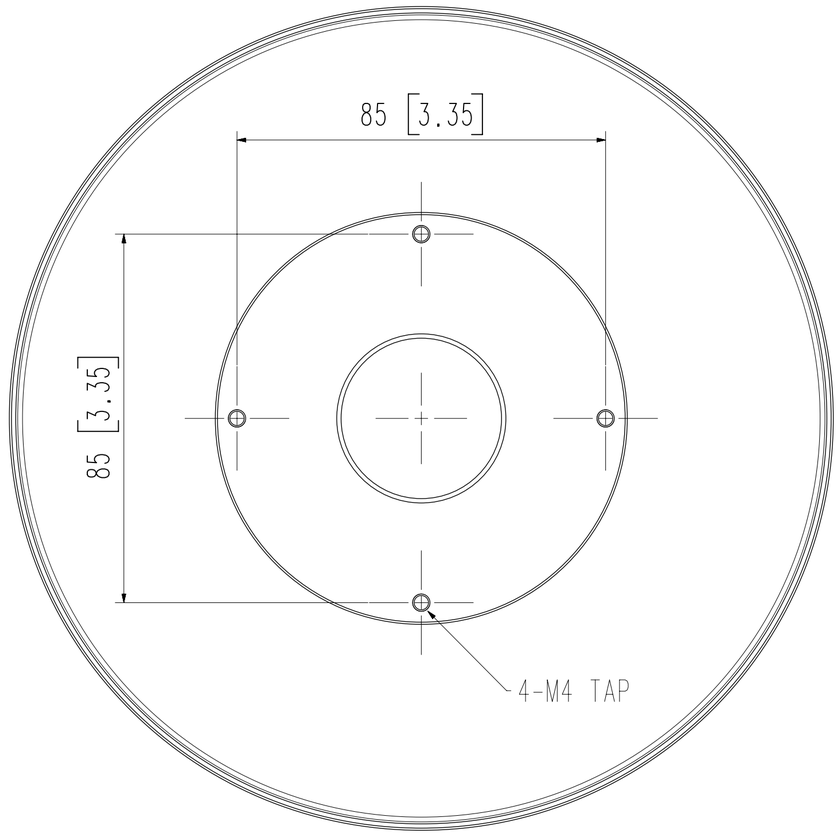


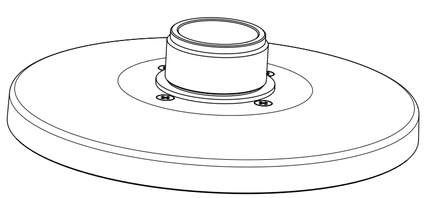

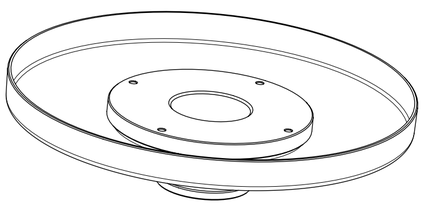

| | | |
|---|---|---|
| 3 | MODEL2 | |
| 2 | MODEL1 | |
| 1 | BASIC MODEL | '26.10.22 |
| No. | MODEL NAME | SBP-180HMS |

Unit:mm[inch] | SCALE:1/1 | Hanwha Vision

A2

©Hanwha Vision Co.,Ltd. All rights reserved.