SCB-2001(P)
SCB-2001PH

DIGITAL COLOR CAMERA

user manual

imagine the possibilities

Thank you for purchasing this Samsung product.
To receive more complete service,
please register your product at
www.samsungsecurity.com

SAMSUNG

Safety information

CAUTION

RISK OF ELECTRIC SHOCK.DO NOT OPEN

CAUTION: TO REDUCE THE RISK OF ELECTRIC SHOCK, DO NOT REMOVE COVER (OR BACK) NO USER SERVICEABLE PARTS INSIDE. REFER SERVICING TO QUALIFIED SERVICE PERSONNEL.

THIS SYMBOL INDICATES THAT DANGEROUS VOLTAGE CONSISTING A RISK OF ELECTRIC SHOCK IS PRESENT WITHIN THIS UNIT.

THIS EXCLAMATION POINT SYMBOL IS INTENDED TO ALERT THE USER TO THE PRESENCE OF IMPORTANT OPERATING AND MAINTENANCE (SERVICING) INSTRUCTIONS IN THE LITERATURE ACCOMPANYING THE APPLIANCE.

WARNING

- TO REDUCE THE RISK OF FIRE OR ELECTRIC SHOCK, DO NOT EXPOSE THIS APPLIANCE TO RAIN OR MOISTURE.
- TO PREVENT INJURY, THIS APPARATUS MUST BE SECURELY ATTACHED TO THE FLOOR/WALL IN ACCORDANCE WITH THE INSTALLATION INSTRUCTIONS.
- IF THIS POWER SUPPLY IS USED AT 240V AC, A SUITABLE PLUG ADAPTER SHOULD BE USED.

WARNING

1. BE SURE TO USE ONLY THE STANDARD ADAPTER THAT IS SPECIFIED IN THE SPECIFICATION SHEET. USING ANY OTHER ADAPTER COULD CAUSE FIRE, ELECTRICAL SHOCK, OR DAMAGE TO THE PRODUCT.
2. INCORRECTLY CONNECTING THE POWER SUPPLY OR REPLACING BATTERY MAY CAUSE EXPLOSION, FIRE, ELECTRIC SHOCK, OR DAMAGE TO THE PRODUCT.
3. DO NOT CONNECT MULTIPLE CAMERAS TO A SINGLE ADAPTER. EXCEEDING THE CAPACITY MAY CAUSE ABNORMAL HEAT GENERATION OR FIRE.
4. SECURELY PLUG THE POWER CORD INTO THE POWER RECEPTACLE. INSECURE CONNECTION MAY CAUSE FIRE.
5. WHEN INSTALLING THE CAMERA, FASTEN IT SECURELY AND FIRMLY. THE FALL OF CAMERA MAY CAUSE PERSONAL INJURY.
6. DO NOT PLACE CONDUCTIVE OBJECTS (E.G. SCREWDRIVERS, COINS, METAL PARTS, ETC.) OR CONTAINERS FILLED WITH WATER ON TOP OF THE CAMERA. DOING SO MAY CAUSE PERSONAL INJURY DUE TO FIRE, ELECTRIC SHOCK, OR FALLING OBJECTS.
7. DO NOT INSTALL THE UNIT IN HUMID, DUSTY, OR SOOTY LOCATIONS. DOING SO MAY CAUSE FIRE OR ELECTRIC SHOCK.
8. IF ANY UNUSUAL SMELLS OR SMOKE COME FROM THE UNIT, STOP USING THE PRODUCT. IN SUCH CASE, IMMEDIATELY DISCONNECT THE POWER SOURCE AND CONTACT THE SERVICE CENTER. CONTINUED USE IN SUCH A CONDITION MAY CAUSE FIRE OR ELECTRIC SHOCK.

9. IF THIS PRODUCT FAILS TO OPERATE NORMALLY, CONTACT THE NEAREST SERVICE CENTER. NEVER DISASSEMBLE OR MODIFY THIS PRODUCT IN ANY WAY. (SAMSUNG IS NOT LIABLE FOR PROBLEMS CAUSED BY UNAUTHORIZED MODIFICATIONS OR ATTEMPTED REPAIR.)
10. WHEN CLEANING, DO NOT SPRAY WATER DIRECTLY ONTO PARTS OF THE PRODUCT. DOING SO MAY CAUSE FIRE OR ELECTRIC SHOCK.

CAUTION

1. DO NOT DROP OBJECTS ON THE PRODUCT OR APPLY STRONG BLOWS TO IT. KEEP AWAY FROM A LOCATION SUBJECT TO EXCESSIVE VIBRATION OR MAGNETIC INTERFERENCE.
2. DO NOT INSTALL IN A LOCATION SUBJECT TO HIGH TEMPERATURE (OVER 140°F), LOW TEMPERATURE (BELOW -14°F), OR HIGH HUMIDITY. DOING SO MAY CAUSE FIRE OR ELECTRIC SHOCK.
3. IF YOU WANT TO RELOCATE THE ALREADY INSTALLED PRODUCT, BE SURE TO TURN OFF THE POWER AND THEN MOVE OR REINSTALL IT.
4. REMOVE THE POWER PLUG FROM THE OUTLET WHEN THERE IS A LIGHTING STORM. NEGLECTING TO DO SO MAY CAUSE FIRE OR DAMAGE TO THE PRODUCT.
5. KEEP OUT OF DIRECT SUNLIGHT AND HEAT RADIATION SOURCES. IT MAY CAUSE FIRE.
6. INSTALL IT IN A PLACE WITH GOOD VENTILATION.
7. AVOID AIMING THE CAMERA DIRECTLY TOWARDS EXTREMELY BRIGHT OBJECTS SUCH AS SUN, AS THIS MAY DAMAGE THE CCD IMAGE SENSOR.
8. APPARATUS SHALL NOT BE EXPOSED TO DRIPPING OR SPLASHING AND NO OBJECTS FILLED WITH LIQUIDS, SUCH AS VASES, SHALL BE PLACED ON THE APPARATUS.
9. THE MAINS PLUG IS USED AS A DISCONNECT DEVICE AND SHALL STAY READILY OPERABLE AT ANY TIME.

FCC STATEMENT

THIS DEVICE COMPLIES WITH PART 15 OF THE FCC RULES. OPERATION IS SUBJECT TO THE FOLLOWING TWO CONDITIONS :

1) THIS DEVICE MAY NOT CAUSE HARMFUL INTERFERENCE, AND

2) THIS DEVICE MUST ACCEPT ANY INTERFERENCE RECEIVED INCLUDING INTERFERENCE THAT MAY CAUSE UNDESIRED OPERATION.

Caution

THIS EQUIPMENT HAS BEEN TESTED AND FOUND TO COMPLY WITH THE LIMITS FOR A CLASS A DIGITAL DEVICE, PURSUANT TO PART 15 OF FCC RULES. THESE LIMITS ARE DESIGNED TO PROVIDE REASONABLE PROTECTION AGAINST HARMFUL INTERFERENCE WHEN THE EQUIPMENT IS OPERATED IN A COMMERCIAL ENVIRONMENT.
THIS EQUIPMENT GENERATES, USES, AND CAN RADIATE RADIO FREQUENCY ENERGY AND, IF NOT INSTALLED AND USED IN ACCORDANCE WITH THE INSTRUCTION MANUAL, MAY CAUSE HARMFUL INTERFERENCE TO RADIO COMMUNICATIONS. OPERATION OF THIS EQUIPMENT IN A RESIDENTIAL AREA IS LIKELY TO CAUSE HARMFUL INTERFERENCE IN WHICH CASE THE USER WILL BE REQUIRED TO CORRECT THE INTERFERENCE AT HIS OWN EXPENSE.

IC COMPLIANCE NOTICE

THIS CLASS A DIGITAL APPARATUS MEETS ALL REQUIREMENTS OF THE CANADIAN INTERFERENCE.-CAUSING EQUIPMENT REGULATIONS OF ICES-003.

Important Safety Instructions

1. Read these instructions.
2. Keep these instructions.
3. Heed all warnings.
4. Follow all instructions.
5. Do not use this apparatus near water.
6. Clean only with dry cloth.
7. Do not block any ventilation openings. Install in accordance with the manufacturer's instructions.
8. Do not install near any heat sources such as radiators, heat registers, or other apparatus (including amplifiers) that produce heat.
9. Do not defeat the safety purpose of the polarized or grounding-type plug. A polarized plug has two blades with one wider than the other. A grounding type plug has two blades and a third grounding prong. The wide blade or the third prong is provided for your safety. If the provided plug does not fit into your outlet, consult an electrician for replacement of the obsolete outlet.
10. Protect the power cord from being walked on or pinched particularly at plugs, convenience receptacles, and the point where they exit from the apparatus.
11. Only use attachments/accessories specified by the manufacturer.
12. Unplug this apparatus during lightning storms or when unused for long periods of time. When a cart is used, use caution when moving the cart/apparatus combination to avoid injury from tip-over.

13. Unplug this apparatus when a card is used. Use caution when moving the cart/ apparatus combination to avoid injury from tip-over.
14. Refer all servicing to qualified service personnel. Servicing is required when the apparatus has been damaged in any way, such as powersupply cord or plug is damaged, liquid has been spilled or objects have fallen into the apparatus, the apparatus has been exposed to rain or moisture, does not operate normally, or has been dropped.

Apparatus shall not be exposed to dripping or splashing and no objects filled with liquids, such as vases, shall be placed on the apparatus

Correct Disposal of This Product (Waste Electrical & Electronic Equipment)

(Applicable in the European Union and other European countries with separate collection systems)

This marking on the product, accessories or literature indicates that the product and its electronic accessories (e.g. charger, headset, USB cable) should not be disposed of with other household waste at the end of their working life. To prevent possible harm to the environment or human health from uncontrolled waste disposal, please separate these items from other types of waste and recycle them responsibly to promote the sustainable reuse of material resources.

Household users should contact either the retailer where they purchased this product, or their local government office, for details of where and how they can take these items for environmentally safe recycling.

Business users should contact their supplier and check the terms and conditions of the purchase contract.
This product and its electronic accessories should not be mixed with other commercial wastes for disposal.

Correct disposal of batteries in this product

(Applicable in the European Union and other European countries with separate battery return systems.)

This marking on the battery, manual or packaging indicates that the batteries in this product should not be disposed of with other household waste at the end of their working life. Where marked, the chemical symbols Hg, Cd or Pb indicate that the battery contains mercury, cadmium or lead above the reference levels in EC Directive 2006/66. If batteries are not properly disposed of, these substances can cause harm to human health or the environment.

To protect natural resources and to promote material reuse, please separate batteries from other types of waste and recycle them through your local, free battery return system.

Contents

Introduction

Features 6
PRODUCT & ACCESSORIES 7
Part Names and Functions 8

Installation

Connecting the Auto Iris Lens Connector 11
Mounting the lens 11
Connecting cables and checking operation 12

How to use OSD Menu

Using Icons in the Menu 13
Main Menu 13
Profile 14
Camera Setup 16
Intelligence 22
Privacy Zone Setup 24
Other Set 25
Communication 26
System Information 26

Specifications

Specifications 28

Introduction

FEATURES

❖ High Resolution

- This camera has realized high resolution of 600 lines using the top-notch full digital image processing and special algorithm technologies.

❖ Intelligent Motion Detection & Tracking

- This is an intelligent function that automatically detects a motion of an object. You can set a virtual fence so it sounds an alert if an object passes / enters /exits the virtual fence or virtual area.

❖ XDR (eXtended Dynamic Range)

- Actively controls the gamma compensation in the way it operates the ambient luminance contrast in a certain pixel unit to determine the optimal visibility.

❖ DAY/NIGHT

- This function can make the IR Cut filtering function inactive under the illumination below the normal value.

❖ High Sensitivity

- It implements images of high sensitivity using the up-to-date SONY Super-HAD IT CCD..

❖ Low Illumination

- It uses the digital signal technologies such as low illumination and Day/Night functions that make your camera identify objects even in the worst environment.

❖ Superior Backlight Adjustment

- When an object has a bright illumination or sunlight behind it, this camera automatically improves the shaded object picture quality.

❖ Digital Power Synchronization

- The full digital Line Lock function directly adjusts the vertical camera synchronization to enhance the operationability and reliability of this camera.

❖ Output Signal Setting

- You can set the following Video output signals: Image reversion (Horizontal, Vertical, or both), Privacy, Horizontal/Vertical profiling, and digital zooming.

❖ OSD(On Screen Display) Menu

- OSD menu is provided to display the status of camera and to configure the functions interactively.

❖ Coaxial Cable Communication

- This is a remote control function that overlaps the coaxial cable (for a transfer of the video signal) with the control signal. In installation or repair, this helps you control the communication controller (optional) without additional cabling.

PRODUCT & ACCESSORIES

❖ Product & Accessories

- Main Product

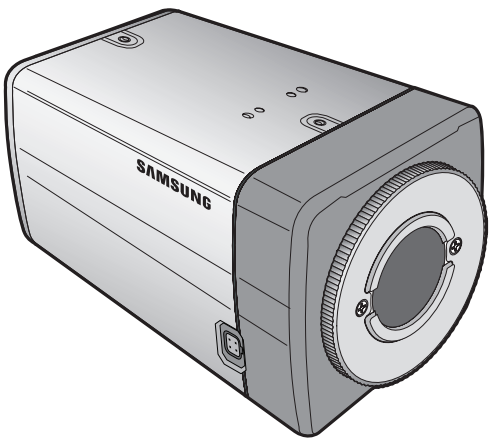

Camera

- Accessories

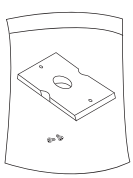

Camera Holder(Mount)

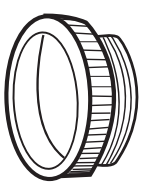

C Mount Adapter

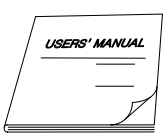

User's Manual

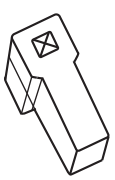

Auto Iris
Lens Connector

Introduction

PART NAMES AND FUNCTIONS

❖ Side View

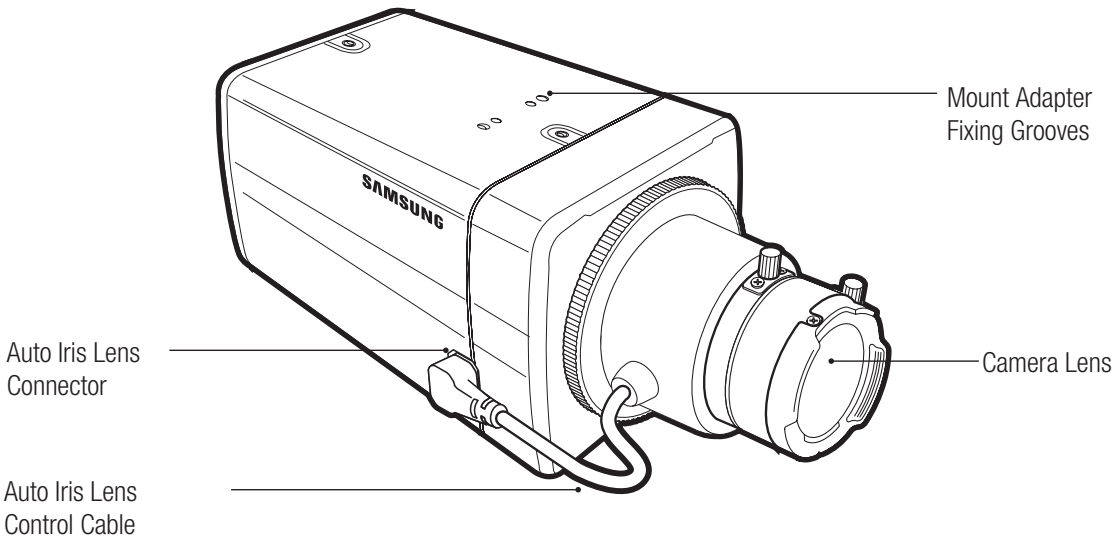

- **Auto Iris Lens Connector**

  This groove is used for screwing the mount adapter, a part of the bracket where the camera will be installed.

- **Auto Iris Lens Control Cable**

  This cable transmits the power and signals from the camera for controlling the Auto Iris Lens.

- **Mount Adapter Fixing Grooves**

  These grooves are used when fixing screws of the mount adapter connected to the bracket when installing the camera on it.

■ **Note** :

– When the camera lens becomes dirty, softly clean it with a lens tissue or a cloth soaked in pure ethanol.

❖ Rear Panel

<AC24/DC12V (SCB-2001(P))>

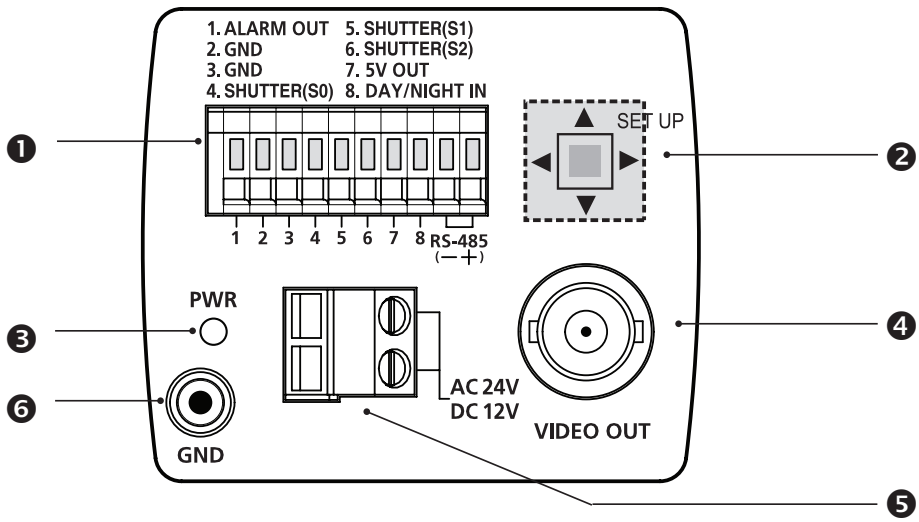

<AC220V~240V(SCB-2001PH)>

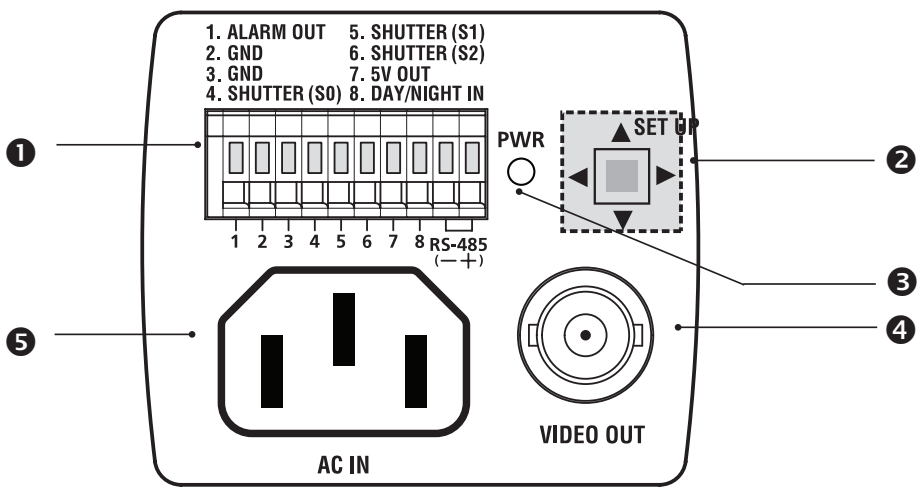

Introduction

❶ Input/Output Connector

This connector has input and output ports for RS-485 control signals, DAY/NIGHT switching, and alarm output signals.

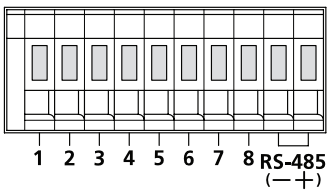

No.	Function	Description
1	ALARM OUT	Alarm out port for motion detection. (Open collector type)
2	GND	Grounding Port.
3	GND	Grounding Port.
4	SHUTTER (S0)	This is a port for selecting an external high speed shutter mode. If connected in LOW (0V), it will become ON inside.
5	SHUTTER (S1)	This is a port for selecting an external high speed shutter mode. If connected in LOW (0V), it will become ON inside.
6	SHUTTER (S2)	This is a port for selecting an external high speed shutter mode. If connected in LOW (0V), it will become ON inside.
7	5V OUT	Power supply port for RS-485 JIG. Use within typical DC +5V 100mA
8	DAY/NIGHT IN	This is a port for DAY&NIGHT conversion. High(DC +3V~+5V) : DAY(COLOR) Mode, Low(0V) : NIGHT(BW) Mode
9	RS-485 DATA-	This is a port for connection to RS-485 DATA- signal line.
10	RS-485 DATA+	This is a port for connection to RS-485 DATA+ signal line.

❷ SETUP Switch

This switch is used to set the function or property. When this switch is pressed for at least 2 seconds, the MAIN MENU appears.

◀ ▶ **(Left/Right) :** By pressing this switch left or right, you can move left or right on the menu or change the displayed value.

▲ ▼ **(Up/Down) :** By pressing this switch up or down, you can move up or down on the menu.

▣ **:** When you press this switch in the menu, the selected function is confirmed. To enter a submenu, press this button.

❸ Power Display LED

When the power is normally connected, the red LED lights.

❹ Video OUT Port

This is connected to the Video Input Port of the monitor and it outputs the Video signals.

❺ Power Connection Port

This is connected to the Power cable.

❻ GND

This is a grounding port.

CONNECTING THE AUTO IRIS LENS CONNECTOR

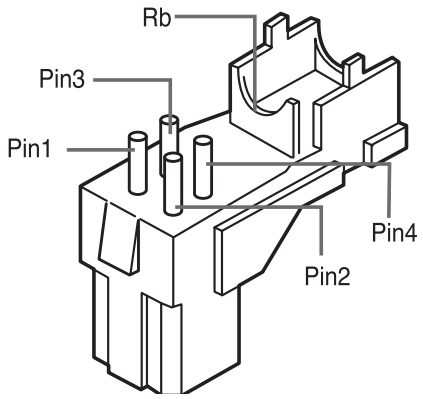

Connect each uncovered shutter control cables to the Auto Iris Lens Connector as the following

Pin No.	DC Control Type	Video Control Type
1	Damp(-)	Power (+12V)
2	Damp(+)	Not applicable
3	Drive(+)	Video Signal
4	Drive(-)	Ground

■ **Note** :

– You can switch a control type of the lens in the menu.

MOUNTING THE LENS

When using the CS lens

Mount the CS lens by rotating it clockwise as shown in the picture:

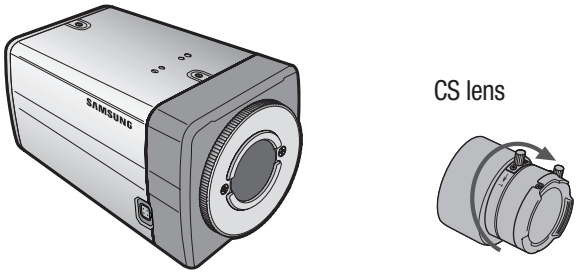

When using the C lens

After mounting the C-mount adapter by rotating it clockwise, turn the C lens clockwise until it is fixed as shown in the picture.

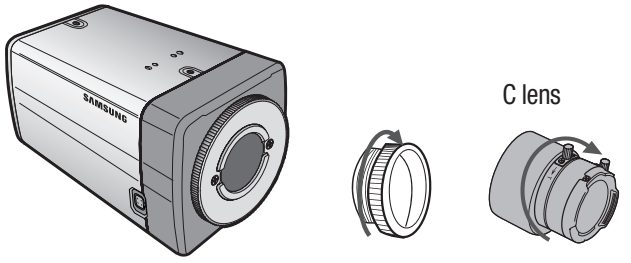

Installation

CONNECTING CABLES AND CHECKING OPERATION

① Connect one end of the BNC cable to the VIDEO OUT Port on the rear of the camera.

② Connect another end of the BNC cable to the VIDEO IN Port on the monitor.

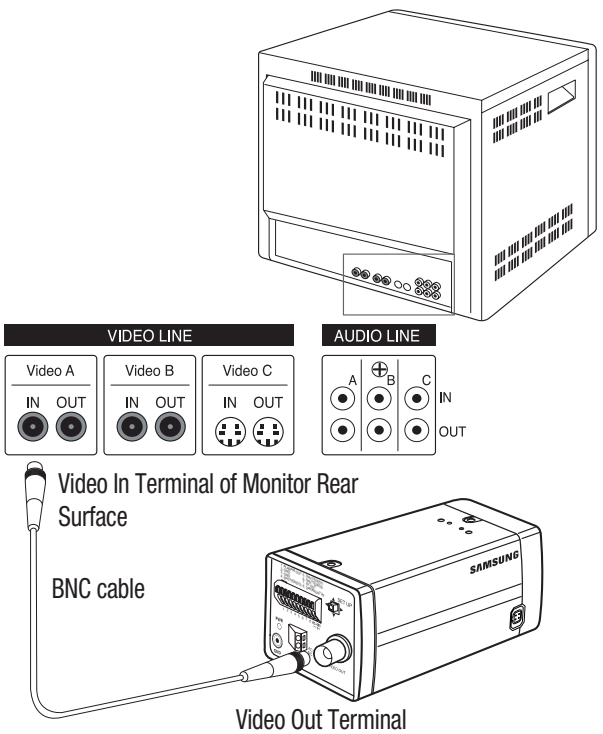

③ Finally connect the power adapter to the camera. You can connect 2 lines of the power adapter to the camera using the Slot Head screwdriver as shown in the picture.
(GND: cable with the white stripe line)

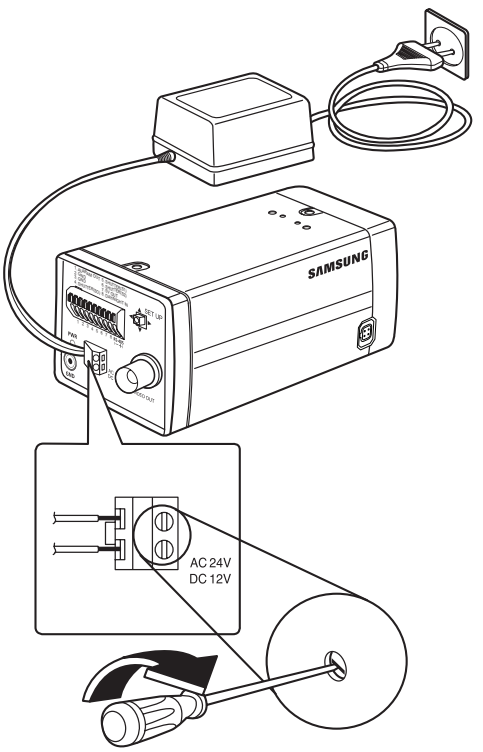

■ **Note** :

– Connect any power source of AC 24V and DC 12V irrespective of polarity.

How to use OSD Menu

USING ICONS IN THE MENU

- ☒ (EXIT)

  Exits the menu setting.
  Before you exits the menu setting, select SAVE to save your settings, or select QUIT to cancel.

- ⮌ (RET)

  Returns to the previous menu.

- ⊡ (SAVE)

  Used to save your settings of MASK AREA, PRIVACY ZONE and more.
  Once you save your settings, they will remain even if you select QUIT in the menu.

- 🗑 (DEL)

  Used to deletes your settings of MASK AREA, PRIVACY ZONE and more.
  Once you delete your settings, they will not be restored even if you select QUIT in the menu.

MAIN MENU

```
✳✳MAIN MENU✳✳
PROFILE↵
CAMERA SET↵
INTELLIGENCE↵
PRIVACY ZONE↵
OTHER SET↵
COMMUNICATION↵
SYSTEM INFO↵

☒
```

- PROFILE

  You can set a mode according to the camera installation conditions.

- CAMERA SET

  Configure Camera related functions and data.

- INTELLIGENCE

  You can configure the settings of motion detection, tracking and more.

- PRIVACY ZONE

  You can configure the privacy related settings.

- OTHER SET

  You can configure for Factory Defaults, and more.

- COMMUNICATION

  Configures the settings regarding the RS-485 communication.

- SYSTEM INFO.

  Displays the system information including the camera version and communication settings.

How to use OSD Menu

PROFILE

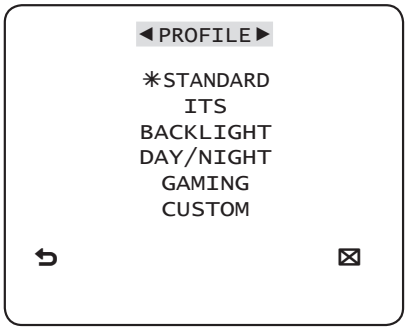

In the **PROFILE** menu, you can configure the following camera settings at once.

CAMERA SET Menu		STANDARD	ITS	BACKLIGHT	DAY/NIGHT	GAMING
Previous Menu	Sub-menus					
IRIS		ALC	ALC	ALC	ALC	ALC
	ALC	-	-	-	-	-
	LENS	DC	DC	DC	DC	DC
	LEVEL	0	0	0	0	0
	BACKLIGHT	OFF	OFF	BLC	OFF	OFF
MOTION		(F.FAST)---	(F.FAST)---	NORM	(F.FAST)---	SLOW
DNR		MID	MID	MID	MID	MID
SHUTTER		OFF	AUTO1/250	OFF	OFF	OFF
SENS-UP		AUTOx4	AUTOx2	AUTOx4	AUTOx4	AUTOx4
XDR		MID	MID	MID	MID	MID
DAY/ NIGHT		AUTO	AUTO	DAY	AUTO	DAY
	NIGHT	-	-	-	-	-
	BURST	OFF	ON	OFF	OFF	OFF
	EXT	-	-	-	-	-
	BURST	OFF	ON	OFF	OFF	OFF

CAMERA SET Menu		STANDARD	ITS	BACKLIGHT	DAY/NIGHT	GAMING
Previous Menu	Sub-menus					
WHITE BAL		DAY	DAY/NIGHT	DAY	DAY/NIGHT	DAY
	DAY	-	-	-	-	-
	MODE	ATW2	ATW1	ATW1	ATW1	ATW1
	RED	0	0	0	0	0
	BLUE	0	0	0	0	0
	NIGHT	-	-	-	-	-
	BRIGHTNESS	User setting allowed	MID	User setting allowed	MID	User setting allowed
	MODE	OFF	ATW2	OFF	ATW2	OFF
	RED	User setting allowed	0	User setting allowed	0	User setting allowed
	BLUE	User setting allowed	0	User setting allowed	0	User setting allowed
DETAIL		2	2	2	2	2

❖ ITS

It will be set automatically so you can easily check the traffic conditions.

❖ BACKLIGHT

It will be set automatically so you can distinguish the object from the background in a severe backlighting scene.

❖ DAY/NIGHT

It will be set automatically so it optimizes to the day or night conditions, respectively.

❖ GAMING

It will be set automatically to help you take a picture in a regular indoor lighting condition.

How to use OSD Menu

CAMERA SETUP

```
◀CAMERA SET▶

CAMERA ID          OFF
IRIS              ALC↵
MOTION     (F.FAST)---
DNR                MID
SHUTTER            OFF
SENS-UP         AUTO X4
FLICKERLESS    (OFF)---
XDR                MID
↩                   ⊠
            ▼
```

```
            ▲
DAY/NIGHT          AUTO↵
WHITE BAL            ↵
DIGITAL ZOOM        OFF
DETAIL          [2]
V-SYNC             INT
AGC COLOR SUP      LOW
REVERSE            OFF
POSI/NEGA            +
PIP                OFF
↩                   ⊠
            ▼
```

```
            ▲
DIS                OFF

↩                   ⊠
```

Setup the general functions of zoom camera module.

Use the ▲ ▼ ◀ ▶ switch to select a menu item.

❖ CAMERA ID [OFF, ON]

```
▣CAMERA ID▣
ABCDEFGHIJKLMNOPQRSTUVWXYZ0
123456789 :?-+*()/


SP▶▶◀◀SP LOCATION↵
CAMERA-1.................
..........................
↩                   ⊠
```

The **CAMERA ID** menu is used for you to assign a unique name to a camera. If you press the **SETUP** switch with the **CAMERA ID** menu selected, you will see the appropriate screen.

You can enter up to 54 alphanumeric or special characters for the **CAMERA ID**. Select **LOCATION** and press the **SETUP** switch to move the display position of the **CAMERA ID**.

❖ IRIS [ALC, ELC]

The **IRIS** menu is used if you want to adjust the intensity of radiation incoming to the camera.

- **ALC (Automatic Light Control)**

① If you press the **SETUP** switch with an **ALC**-based sub menu selected, you will see the appropriate screen.

```
▣ALC▣
LENS                  DC
LEVEL        [00]----I----
BACKLIGHT             OFF

↩                   ⊠
```

The **LENS** menu is used if you select a type of the AI lens.

For normal operation, you must select **DC** for a DC-type lens, and select **VIDEO** for a VIDEO-type lens.

The **LEVEL** menu is used to adjust the overall brightness, where "+" will increase the brightness and "–" will decrease it.

② If you set the **BACKLIGHT** option to **BLC**, you will see a menu where you can set the **BLC** area.

you can set the desired **BLC** zone by defining the size and location.

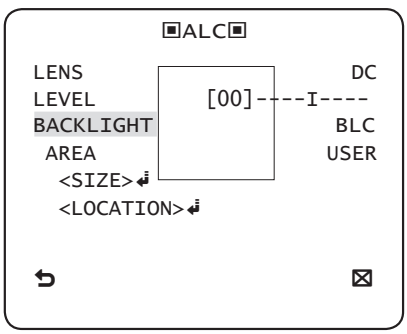

If you use an ordinary camera in a scene with an intensive backlight, the object will be displayed dark on the monitor affected by the backlight. To solve this problem, you can use the **BLC**(Back Light Compensation) function to improve the sharpness of the image in such a high contrast scene.

- **ELC (Electronic Light Control)**

① If you press the **SETUP** switch when the **ELC** submenu is selected, the corresponding screen appears. You can make the **ELC** (Electronic Light Control) function active or not.

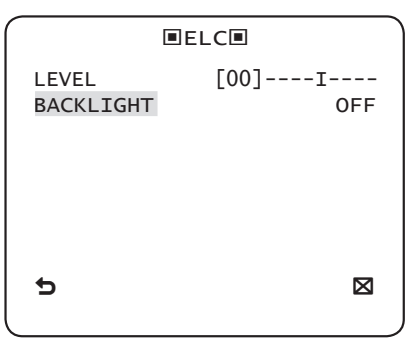

② In similar to **ALC** setting, you can specify the **BLC** area.

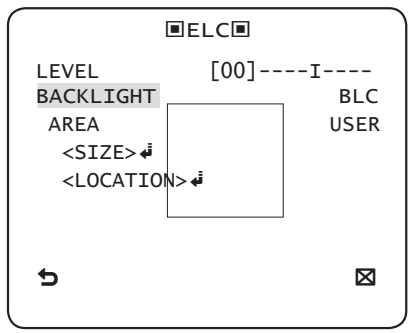

❖ **AGC**
[OFF, VERY LOW, LOW, MID, HIGH, VERY HIGH, USER, FIX]

The **AGC** (Auto Gain Control) menu is used to set the **AGC** level of the camera. When the **AGC** is active, the camera automatically increases the sensitivity by amplifying the Video signal when the strength of the signal falls below the normal value.

If **OFF** or **FIX** mode is selected in the **SENS-UP** menu, you can specify the **AGC** level.

If you press the **SETUP** switch with a **USER** sub menu selected, you will see the appropriate screen.

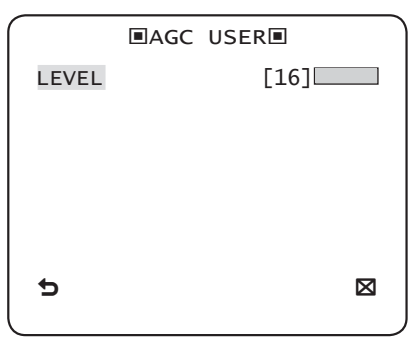

In **USER** mode, you can break down the level in 16 steps from **VERY LOW** to **VERY HIGH** to your preference.

How to use OSD Menu

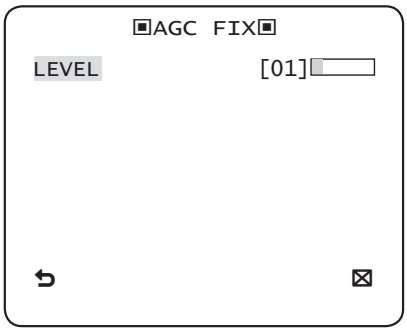

If you press the **SETUP** switch with a **FIX** sub menu selected, you will see the appropriate screen.

As a fixed value of the **AGC** gain is used in **FIX** mode, you can select one of the 16 detailed levels from **VERY LOW** to **VERY HIGH** before fixing it.

■ **Note** :

– If the **DAY/NIGHT** menu of the **CAMERA SET** is set to **AUTO**, the **AGC** menu will be deactivated.

– If **FLICKERLESS** is set to **ON**, the **AGC FIX** mode will be disabled.

❖ MOTION [S.SLOW, SLOW, NORM, FAST, F.FAST]

The **MOTION** menu is used to adjust the strength of the **AGC** level for a control of the camera motion. This is available only if the **SENS-UP** menu is set to **AUTO**.
You can select one from **S.SLOW**, **SLOW**, **NORM**, **FAST** and **F.FAST** for the **AGC** level.

If you monitor a fast moving object in a low contrast scene, select **F.FAST** while select **S.SLOW** for a hardly moving object in the same lighting condition.

■ **Note** :

– If the **DAY/NIGHT** menu of the **CAMERA SET** is set to **AUTO**, the **MOTION** menu will be deactivated.

❖ DNR [OFF,LOW,MID,HIGH, USER(1~16)]

You can configure the **DNR** (Digital Noise Reduction) related settings.

Reduces the noise on the screen.
This is especially useful for a severely distorted screen.

You can set the level if you set **DNR** to **USER**.

❖ SHUTTER

[OFF, AUTO 1/100(PAL:1/120), AUTO 1/250, AUTO 1/500, AUTO 1/1000, AUTO 1/2000, AUTO 1/4000, AUTO 1/10K , 1/100(PAL:1/120), 1/250, 1/500, 1/1000, 1/2000, 1/4000, 1/10K , EXT]

The **SHUTTER** menu is used to set the fixed high-speed electronic shutter, auto high speed electronic shutter and external high speed electronic shutter(EXT).

You can select one of 7 options from 1/100(PAL:1/120) to 1/10K for the fixed high speed electronic shutter, which is mostly used for imaging a fast moving object.

The auto high speed electronic shutter operates as the fixed high speed shutter in a high contrast scene but automatically focuses the target if the iris opens fully in a low contrast scene like in **ELC** mode. When it gets brighter back, the mode will switch to the fixed high speed electronic shutter mode.

However, the auto high speed shutter operates properly only in a camera featuring a DC or VIDEO lens.

In external high speed electronic shutter (EXT) mode, you can select one of 8 modes from **OFF** through 1/100(PAL:1/120) to 1/10K for the high speed electronic shutter. It works as the high speed electronic shutter. You can select an option using SHUTTER(S0), SHUTTER(S1) and SHUTTER(S2) on the rear.

Connect each of the terminals to GND.

See the below table for the operation.

	SHUTTER(S0)	SHUTTER(S1)	SHUTTER(S2)
OFF (NTSC: 1/60, PAL:1/50)	OFF	OFF	OFF
1/100 (PAL:1/120)	ON	OFF	OFF
1/250	OFF	ON	OFF
1/500	ON	ON	OFF
1/1000	OFF	OFF	ON

1/2000	ON	OFF	ON
1/4000	OFF	ON	ON
1/10K	ON	ON	ON

■ **Note** :

– If **IRIS** mode is set to **ELC**, the **SHUTTER** menu will be deactivated as you adjust the brightness using the electronic shutter.

– If the **SENS-UP** function is set to **AUTO**, only items of **OFF** and **AUTO** are available in the **SHUTTER** menu.

– If the **SENS-UP** mode is set to **FIX**, the **SHUTTER** menu will be deactivated.

– If the **FLICKERLESS** function is set to **ON**, the **SHUTTER** menu will be deactivated.

❖ SENS-UP

[OFF, AUTO X2, AUTO X4, AUTO X6, AUTO X8, AUTO X12, AUTO X16, AUTO X24, AUTO X32, AUTO X48, AUTO X64, AUTO X96, AUTO X128, AUTO X256, AUTO X512, FIX X2, FIX X4, FIX X6, FIX X8, FIX X12, FIX X16, FIX X24, FIX X32, FIX X48, FIX X64, FIX X96, FIX X128, FIX X256, FIX X512]

Automatically detects the ambient level of darkness in the dark or low contrast scene to extend the accumulated time, keeping the image bright and sharp; It can be also used as FIX mode.

■ **Note** :

– If the **SHUTTER** option is set to fixed electronic shutter or **EXT** mode, the **SENS-UP** menu will be deactivated.

– If **FLICKERLESS** is set to **ON**, the **FIX** mode of the **SENS-UP** menu will be disabled.

– If the **IRIS** menu is set to **ELC**, the electronic shutter will control the brightness so the **SENS-UP** function can not be set to **FIX** mode, but to **OFF** or **AUTO** mode.

– If the **SHUTTER** menu is set to **AUTO**, the **SENS-UP** menu can be set to either **OFF** or **AUTO** mode.

❖ FLICKERLESS [OFF, ON]

If set to **ON**, the shutter speed will be fixed to 1/100(PAL:1/120) second. This will prevent possible screen distortion due to a mismatch between the vertical sync frequency and the blinking frequency of the lighting.

■ **Note** :

– If the **IRIS** function is set to **ELC**, the Flickerless menu will be deactivated. If the **SHUTTER** menu is set to **AUTO**, **FIX** or **EXT** mode, the Flickerless menu will be deactivated.

– If the **SENS-UP** function is set to **FIX** mode, the Flickerless menu will be deactivated.

– If **AGC** is set to **FIX** mode, the **FLICKERLESS** function will be disabled.

❖ XDR (eXtended Dynamic Range) [OFF, LOW, MID, HIGH]

Actively controls the gamma compensation in the way it operates the ambient luminance contrast in a certain pixel unit to determine the optimal visibility.

Select one from **OFF**, **LOW**, **MID** and **HIGH**. Closing to **HIGH** will increase the compensation level.

❖ DAY/NIGHT [DAY,NIGHT,AUTO,EXT]

• **DAY**

If set to **DAY**, it will be fixed to **DAY** mode regardless of the ambient conditions.

• **NIGHT**

If set to **NIGHT**, it will be fixed to Black-and-White mode regardless of the ambient conditions.
If you press the **SETUP** switch with a **NIGHT** sub menu selected, you will see a menu where you can set Burst to **OFF/ON**.
If **BURST** is set to **ON**, the Burst signal will output together with the black-and-white composite video signal. If **BURST** is set to **OFF**, the Burst signal does not output.
You can set the **BURST** option to **OFF/ON**, or select to output the Burst signal in **NIGHT** mode.

- **AUTO**

The camera will automatically switch between **DAY and NIGHT** mode, according to the lighting condition.

If you press the **SETUP** switch with an **AUTO**-based sub menu selected, you will see the appropriate screen.

```
▣AUTO▣
BURST                OFF
DAY→NIGHT
 BRIGHTNESS          MID
 DWELL TIME           2S
NIGHT→DAY
 BRIGHTNESS          MID
 DWELL TIME           5S
MASK AREA          1  2
```

You can set the **BURST** option to **OFF/ON**, or select to output the Burst signal in **NIGHT** mode.

You can select from **LOW**, **MID** and **HIGH** for the brightness of **DAY→NIGHT**, which is a brightness level in switching from the color filter to Black-and-White. Closing to **LOW** from **HIGH** will switch the filter in a low contrast scene. The **DWELL TIME** of **DAY→NIGHT** is a time required to determine the need for switching the filter.

You can select from **LOW**, **MID** and **HIGH** for the brightness of **NIGHT→DAY**, which is a brightness level in switching from the Black-and-White filter to color. Closing to **LOW** from **HIGH** will switch the filter in a low contrast scene. The **DWELL TIME** of **NIGHT→DAY** is a time required to determine the need for switching the filter.

The **MASK** menu is used to prevent a filter switch error or inability of determining the switch in existence of a high spot light source at night. If you press the **SETUP** switch in item 1 or 2 of the **MASK** menu, you will see a menu where you can specify an area to mask.

```
▣MASK AREA▣
<SIZE>
<LOCATION>
```

You can specify Mask 1 and 2 simultaneously. The mask is used only for determining the filter switch and any excessive bright area at night will be masked.

■ **Note** :

– If **BACKLIGHT** is set to **BLC**, the **MASK AREA** function will be deactivated.

- **EXT**

This enables an auto switch between **DAY** and **NIGHT** mode using the interface with the external sensor.

❖ **WHITE BAL** **[DAY/NIGHT]**

If you want to adjust the color scheme, use the **WHITE BALANCE** function.

- **DAY**

In **DAY** mode, you can set the color values of **RED** and **BLUE**. The screen will be displayed in colors according to your settings.

```
▣WHITE BAL▣
DAY/NIGHT              DAY
 MODE                  AWC
  RED          [00]----I----
  BLUE         [00]----I----
  R-GAIN         [0248]
  B-GAIN         [0247]
```

■ **Note** :

– You can set the values of **R-GAIN** and **B-GAIN** only in **AWC** mode.

- **NIGHT**

  Use the **NIGHT** mode if you want to set the white balance differently according to the ambient luminance.

  If the **NIGHT** mode is set to **OFF**, the white balance will always operate as set in **DAY** mode; if not to **OFF**, the camera will switch to as set in **DAY/NIGHT** mode according to the brightness.

  In **NIGHT** mode, you can set the values of **RED**, **BLUE** and **BRIGHTNESS**. The screen will be displayed in colors according to your settings.

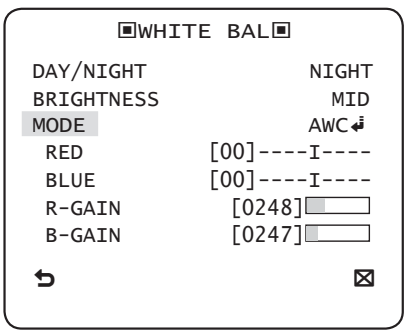

■ **Note** :

– You can set the values of **R-GAIN** and **B-GAIN** only in **AWC** mode.

– If **AGC** is set to **OFF** or **FIX**, you can not access the **NIGHT** menu.

– **For adjusting the white balance, the following 5 modes are provided:**

- **ATW1**(Auto Tracing White Balance mode 1): The camera can automatically adjust the color temperature in real time, according to the ambient conditions. The color temperature ranges from approx. 2500K to 9300K.
- **ATW2**: The color temperature ranges from approx. 2,000K to 10,000K.
- **AWC** (Auto White Balance Control): If you press the **SETUP** switch in the appropriate item position, Auto White Balance will perform once.
- **3200K** : Set color temperature to 3200K
- **5600K** : Set color temperature to 5600K

– **RED** : Adjusts the strength of the red color.

– **BLUE** : Adjusts the strength of the blue color.

– **R-GAIN**/**B-GAIN** : Enables you to set the current color temperature manually.

– **BRIGHTNESS** : Select a brightness level in switching from setting in **DAY** mode to setting in **NIGHT** mode.

❖ **DIGITAL ZOOM [ON/OFF]**

You can set the digital zoom factor and position. If you press the **SETUP** switch with the **DIGITAL ZOOM** function set to **ON**, you will see the appropriate screen.

When the zoom factor and position are defined, the digital zoom function will operate.

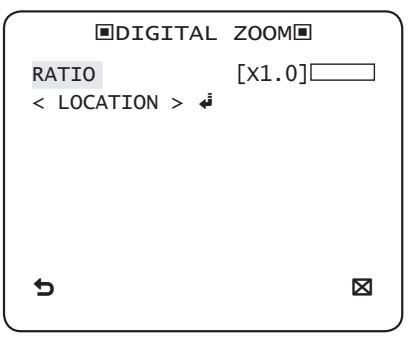

- **LOCATION** : If you press the **SETUP** switch in the condition where the image is enlarged as much as the ratio setting, you can watch an invisible area of the effective screen as well using the ▲ ▼ ◀ ▶ switch.

■ **Note** :

– If the digital zoom factor is set to larger than 1x, the **FENCE** function will be deactivated.
The **DIGITAL ZOOM** function enlarges the pixel itself, which can cause deterioration of the quality.

❖ **DETAIL [0~3]**

Controls the horizontal or vertical distinction.

❖ **V-SYNC** **[INT, LINE]**

Select the vertical sync mode for **INT** or **LINE**.

If you select **INT**, the camera will use the internal synchronization.

If selecting **LINE**, the camera will use the external power source frequency for the synchronization.

You can adjust the **LL-PHASE**.

■ **Note** :

– Use of DC 12V will fix **V-SYNC** to **INT**, which can not be changed.

❖ **AGC COLOR SUP** **[LOW , MID, HIGH]**

Adjust the color scheme according to the **AGC** value.

❖ **REVERSE** **[OFF, H, V, H/V]**

Mirrors video signals horizontally, vertically, or both.

❖ **POSI/NEGA** **[+, -]**

Output as it is or mirror the video brightness signal.

❖ **PIP** **[OFF, ON]**

Displays a sub image together with the main image on the same screen using the Picture In Picture function.

■ **Note** :

– If more than one privacy zone is set and the **PRIVACY SET** is set to **ON**, the **PIP** function will be deactivated.

– If the **INTELLIGENCE** function is set to **FENCE** mode, the PIP menu will be deactivated.

❖ **DIS** **[OFF, ON]**

Digital Image Stabilization will set the anti-shake compensation.

■ **Note** :

– If you set **DIS** to **ON**, the compensation area will be enlarged as set in the digital zoom factor.
If you set the digital zoom factor to greater than the enlarged zoom factor for the compensation, the **DIS** function will be deactivated.

INTELLIGENCE

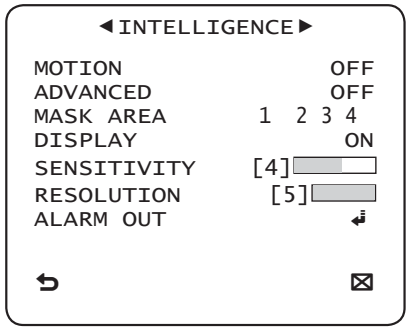

You can set the motion detection and tracking in the **INTELLIGENCE** menu.

❖ **MOTION** **[OFF,TRACKING,DETECTION]**

• **TRACKING**

Detects and tracks a moving object.

• **DETECTION**

Detects a moving object.

■ **Note** :

– If it is set to **DETECTION**, you can not set such functions as **FIXED/MOVED** and **FENCE** in the **ADVANCED** menu.

❖ **ADVANCED** **[OFF, FIXED/MOVED, FENCE]**

Detects a motion of an object and displays an image of any moving object before tracking the moving route.

• **FENCE**

This is to detect if a moving object passes through the specified **LINE** or **AREA**.

In a condition where a moving object is detected in an analysis of the previous and current frames whose movement overlaps a certain area, the system displays “PASS” if the object’s center line passes through the line while it displays “ENTER” or “EXIT” if the center point passes through the area.

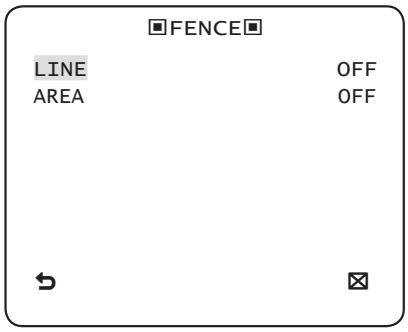

You can set the position and detection direction of the **LINE**, and the size and position of the **AREA**.

- How to set the line

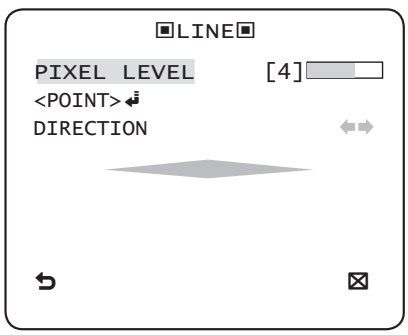

① If you press the **SETUP** switch with the **LINE** option set to **ON**, you can specify the position and detection direction of the line.

② If you change the **PIXEL LEVEL** for setting the position, specify the pixel that moves by a single pressure of the ▲ ▼ ◀ ▶ switch.

③ In **<POINT>**, you can specify the first position of the line by pressing the **SETUP** switch once, and the second position by pressing the switch again. Use the ▲ ▼ ◀ ▶ switch to specify the position.
Set each position of the two points and press the **SETUP** switch to complete the positioning.

④ If you change the **DIRECTION**, you can specify the detection direction. The detection direction based on the defined two points will be displayed on the screen.

- How to set the area

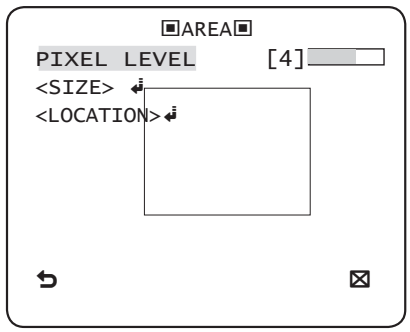

① If you press the **SETUP** switch with the **AREA** option set to **ON**, you can specify the position and size of the area.

② If you change the **PIXEL LEVEL** for setting the position, specify the pixel that moves by a single pressure of the ▲ ▼ ◀ ▶ switch.

③ In **<SIZE>**, press the **SETUP** switch and use the ▲ ▼ ◀ ▶ switch to adjust the size.
Press the **SETUP** switch again to complete the sizing.

④ In **<LOCATION>**, press the **SETUP** switch and use the ▲ ▼ ◀ ▶ switch to specify the position.
Press the **SETUP** switch again to complete the positioning.

■ **Note** :

– If you set the **LINE** of the **FENCE** to **ON**, **PRIVACY** 12 will not be available.
Functions of **FENCE**, **PIP**, **DIS** and **DIGITAL ZOOM** (if the digital zoom factor is set to larger than 1x) can not be used simultaneously.

– In the boundary of the defined **AREA** and LINE, a **FENCE** detection error may occur if two or more moving objects overlap with each other or one object separates in multiple directions.

- **FIXED/MOVED**

If an object on the screen suddenly disappears or an object comes out of nowhere and stays for a certain time, the area will be displayed.

A detection (**FIXED/MOVED**) error may occur if :

- multiple motions occur continuously in random directions
- a fixed object moves in one position continuously
- a second object screens the first moving object

How to use OSD Menu

❖ **MASK AREA [1~4]**

Specify a detection exception area to mask.

Select a mask number and specify the size and position.

```
▣MASK AREA▣

<SIZE>
<LOCATION>
```

❖ **DISPLAY [ON, OFF]**

With the **DISPLAY** option set to **ON**, a motion or a set **ADVANCED** function will be displayed on the screen, if detected.

❖ **SENSITIVITY [1~7]**

Set the sensitivity of the motion detection.

❖ **RESOLUTION [1~5]**

If setting it to high, the camera can detect even a trivial movement of the target.

❖ **ALARM OUT**

If you set a desired menu item to **ON**, the camera will sound an alert if it detect the appropriate motion.

```
▣ALARM OUT▣

MOTION                ON
FIXED/MOVED           ON
FENCE
 LINE                 ON
 AREA
  ENTER               ON
  EXIT                ON
```

PRIVACY ZONE SETUP

```
◀PRIVACY ZONE▶

 1  2  3  4  5  6
 7  8  9 10 11 12

PRIVACY SET        ON
STYLE          MOSAIC1
```

The **PRIVACY** function will protect your privacy by screening the privacy area that you have specified during monitoring. You can specify up to 12 privacy zones.

If you set the **PRIVACY SET** to **ON**, your **PRIVACY ZONE** settings will be applied.

You can change the style to adjust the mosaic size and color of the **PRIVACY ZONE.**

```
◀PRIVACY ZONE▶

 1  2  3  4  5  6
 7  8  9 10 11 12

PRIVACY SET        ON
STYLE           COLOR
 Y-LEVEL      [128]
 RED          [128]
 BLUE         [128]
```

Use the ▲ ▼ ◀ ▶ switch to select one from **PRIVACY** 1 through 12.

Select one from **PRIVACY** 1~12 and press the **SETUP** switch to confirm your setting. You can specify a pixel that moves as you change the **PIXEL LEVEL** to set the position.

```
▣PRIVACY ZONE SET1▣

PIXEL LEVEL      [4]
<POINT>
<POSITION>
```

- How to set the point

You can set each position of the 4 points.

① If you press the **SETUP** switch in **<POINT>**, you will see the points available in the **PRIVACY ZONE**. Each time you press the **SETUP** switch, the points available will move.

② Use the ▲ ▼ ◀ ▶ switch to set the position of each point. Set each position of the four points and press the **SETUP** switch to complete the positioning.

- How to set the position

You can move the position of the overall area.

① By pressing the **SETUP** switch in **<POSITION>**, you can move the overall position of the privacy zone.

② Use the ▲ ▼ ◀ ▶ switch to move the position and press the **SETUP** switch to confirm it.

■ **Note** :

– If more than one **PRIVACY ZONE** is specified and the **PRIVACY SET** is set to **ON**, the **PIP** function will be deactivated.

– If the 12th PRIVACY ZONE is specified, the LINE function of FENCE will be deactivated.

OTHER SET

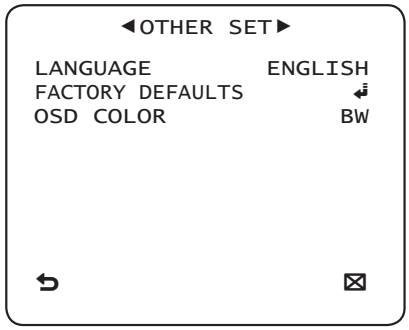

❖ LANGUAGE

You can set the language displayed on the screen. Select your language by using the left and right keys.

❖ FACTORY DEFAULTS

All the settings will be restored to the factory default.
However, the settings of **PROTOCOL**, **BAUD RATE**, **ADDRESS** and **LANGUAGE** will not be restored to the default.

❖ OSD COLOR [BW, R/G/B]

You can set the OSD(On-screen Display) color to COLOR or B/W.

How to use OSD Menu

COMMUNICATION

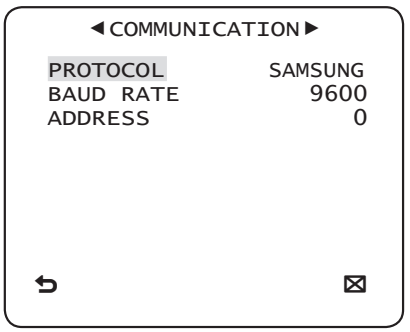

The **COMMUNICATION** menu is used to configure the settings regarding RS-485 communications.

Use the rear panel of the camera to connect to RS-485.

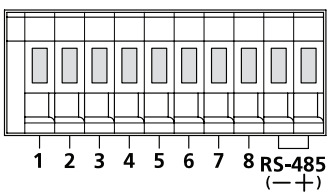

[Camera I/O Connector]

Use the ▲ ▼ ◀ ▶ switch to specify the protocol, baud rate and address (0~255) for communications.

❖ PROTOCOL

Select a communication protocol.

❖ BAUD RATE

Select a baud rate.

■ **Note** :

– The baud rate differs, depending on the specified protocol.

❖ ADDRESS [0~255]

You must specify a unique address for each camera in the same RS-485 network.

To control a specific camera, you must match the address of the camera with that of the DVR or the controller.

SYSTEM INFORMATION

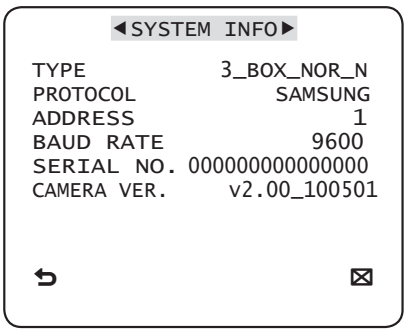

You can view the system information including the protocol, address, baud rate, serial number, camera version, and EEP version.

❖ **Initial Configuration Table**

• Camera Configuration	
CAMERA ID	OFF
IRIS	ALC
AGC	VERY HIGH
MOTION	(F.FAST)
DNR	MID
SHUTTER	OFF
SENS-UP	AUTO x4
FLICKERLESS	(OFF)
XDR	MID
DAY/NIGHT	AUTO
DIGITAL ZOOM	OFF
DETAIL	[2]
AGC COLOR SUP	MID
REVERSE	OFF
POSI/NEGA	+
PIP	OFF
DIS	OFF
V-SYNC	INT

Specifications

SPECIFICATIONS

Items	Sub-items		SCB-2001N
Camera Type	CCTV Camera (DAY/NIGHT)		
Image	Device		1/3” Super-HAD IT CCD
	Pixels	Total	811 x 508
		Effective	768 x 494
Scanning	System		Interlace
	Scanning Line		525 lines
	Frame		30frame/1sec
	Horizontal Frequency	Internal Mode	15,734 Hz
		Line-lock Mode	15,750 Hz
	Vertical Frequency	Internal Mode	59.94 Hz
		Line-lock Mode	60 Hz
Min. Scene Illumination			

Condition				Min. Scene illumination			
Sens-up	F No.	Level		DAY		NIGHT	
OFF	1.2	50	IRE	0.05	Lux	0.005	Lux
OFF	1.2	30	IRE	0.03	Lux	0.003	Lux
OFF	1.2	15	IRE	0.02	Lux	0.002	Lux
512 times	1.2	50	IRE	0.00010	Lux	0.00001	Lux
512 times	1.2	30	IRE	0.00006	Lux	0.00001	Lux
512 times	1.2	15	IRE	0.00003	Lux	0.000003	Lux

Functions	Number of Privacy Zone	12 (Polygonal Method)
	Day/Night	DAY/NIGHT/AUTO/EXT
	Motion Detection	OFF/Tracking/Detection
	eXtended Dynamic Range(XDR)	Off/On (Level Setting)
	D-Zoom	x1 ~ x16 (x0.1 STEP)
	PIP	Off/On
	High Speed Shutter	1/60 ~ 1/10Ksec (OSD/External Control)
	Flickerless	Off/On
	Sens-Up	x2 ~ x512
	BLC	Off/On (Area Setting)
	AGC	Off/On (Max.Level Setting)
	ELC	Off/On (~ 1/200K sec)
	Line Lock	Off/On (Phase Control)
	Camera ID	Off/On (Max.54ea/2Line)
	White Balance	ATW1/ATW2/AWC/3200K/5600K
	Digital Noise Reduction(DNR)	Off/On (Adaptive 3D+2D)
	Digital Image Stabilization(DIS)	Off/On
	Intelligent Video	Fixed/Moved, Fence
	Etc. Function	Detail, Reverse(H/V), Posi/Nega

Specifications

Items	Sub-items		SCB-2001N
Resolution	Horizontal		600 TV Lines
	Vertical		350 TV Lines
Video Output	-		VBS 1.0Vp-p, 75 Ω
S/N Ratio	S/N Ratio		Approx. 52dB
Lens	Lens Drive Type		MANUAL/AI(VIDEO/DC)
	Mount Type		CS/C
Alarm	Input		N/A
	Output		1 Output
Remote Control	Coaxitron (Data On Coax cable)		Yes (with SCX-RD100)
	RS-485		Yes (Multi Protocol, 8ea)
Environmental Conditions	Operating Temperature		-10˚C ~ +50˚C
	Humidity		Less than 90%
Power	Power Requirement		AC24V ± 10%(60Hz ± 0.3Hz) DC12V ± 10%
	Power Consumption (With DC Lens)		In normal operation : 2.3W In switching the DAY/NIGHT filter : 2.8W
	LED Indicator		Yes
Physical Specification	Dimensions (WxHxD)	Net	64(W) x 58(H) x 109.2(D) mm
		Package	173(W) x 99(H) x 115(D) mm
	Weight	Net	305g
		Package	530g
	Color	Body	Silver

Specifications

Items	Sub-items		SCB-2001P / SCB-2001PH
Camera Type	CCTV Camera (DAY/NIGHT)		
Image	Device		1/3” Super-HAD IT CCD
	Pixels	Total	795 x 596
		Effective	752 x 582
Scanning	System		Interlace
	Scanning Line		625 lines
	Frame		25frame/1sec
	Horizontal Frequency	Internal Mode	15,625 Hz
		Line-lock Mode	15,625 Hz
	Vertical Frequency	Internal Mode	50 Hz
		Line-lock Mode	50 Hz
Min. Scene Illumination			
Functions	Number of Privacy Zone		12 (Polygonal Method)
	Day/Night		DAY/NIGHT/AUTO/EXT
	Motion Detection		OFF/Tracking/Detection
	eXtended Dynamic Range(XDR)		Off/On (Level Setting)
	D-Zoom		Max. x16
	PIP		Off/On
	High Speed Shutter		1/50 ~ 1/10Ksec (OSD/External Control)
	Flickerless		Off/On
	Sens-Up		x2 ~ x512
	BLC		Off/On (Area Setting)
	AGC		Off/On (Max.Level Setting)
	ELC		Off/On (~ 1/200K sec)
	Line Lock		Off/On (Phase Control)
	Camera ID		Off/On (Max.54ea/2Line)
	White Balance		ATW1/ATW2/AWC/3200K/5600K
	Digital Noise Reduction(DNR)		Off/On (Adaptive 3D+2D)
	Digital Image Stabilization(DIS)		Off/On
	Intelligent Video		Fixed/Moved, Fence
	Etc. Function		Detail, Reverse(H/V), Posi/Nega
Resolution	Horizontal		600 TV Lines
	Vertical		350 TV Lines

Condition				Min. Scene illumination			
Sens-up	F No.	Level		DAY		NIGHT	
OFF	1.2	50	IRE	0.05	Lux	0.005	Lux
OFF	1.2	30	IRE	0.03	Lux	0.003	Lux
OFF	1.2	15	IRE	0.02	Lux	0.002	Lux
512 times	1.2	50	IRE	0.00010	Lux	0.00001	Lux
512 times	1.2	30	IRE	0.00006	Lux	0.00001	Lux
512 times	1.2	15	IRE	0.00003	Lux	0.000003	Lux

Specifications

Items	Sub-items		SCB-2001P / SCB-2001PH
Video Output	-		VBS 1.0Vp-p, 75 Ω
S/N Ratio	S/N Ratio		Approx. 52dB
Lens	Lens Drive Type		MANUAL/AI(VIDEO/DC)
	Mount Type		CS/C
Alarm	Input		N/A
	Output		1 Output
Remote Control	Coaxitron (Data On Coax cable)		Yes (with SCX-RD100)
	RS-485		Yes (Multi Protocol, 8ea)
Environmental Conditions	Operating Temperature		-10˚C ~ +50˚C
	Humidity		Less than 90%
Power	Power Requirement		SCB-2001P : AC24V ± 10%(50Hz±0.3Hz) DC12V ± 10% SCB-2001PH : AC220V ± 10%(50Hz±0.3Hz)
	Power Consumption (With DC Lens)		In Normal operation : SCB-2001P : 2.3W SCB-2001PH : 2.9W In switching the DAY/NIGHT filter : SCB-2001P :2.8W SCB-2001PH : 3.4W
	LED Indicator		Yes
Physical Specification	Dimensions (WxHxD)	Net	SCB-2001P : 64(W) x 58(H) x 109.2(D) mm SCB-2001PH : 64(W) x 58(H) x 129.2(D) mm
		Package	173(W) x 99(H) x 115(D) mm
	Weight	Net	SCB-2001P : Approx. 305g SCB-2001PH : Approx. 395g
		Package	SCB-2001P : Approx. 530g SCB-2001PH : Approx. 620g
	Color	Body	Silver

SALES NETWORK

SAMSUNG TECHWIN CO., LTD.
Samsungtechwin R&D Center, 701, Sampyeong-dong, Bundang-gu, Seongnam-si, Gyeonggi-do, Korea, 463-400
TEL : +82-70-7147-8740~60 FAX : +82-31-8018-3745

SAMSUNG TECHWIN AMERICA Inc.
1480 Charles Willard St, Carson, CA 90746, UNITED STATES
Tol Free : +1-877-213-1222 FAX : +1-310-632-2195
www.samsungcctvusa.com

SAMSUNG TECHWIN EUROPE LTD.
Samsung House, 1000 Hillswood Drive, Hillswood Business Park Chertsey, Surrey, UNITED KINGDOM KT16 OPS
TEL : +44-1932-45-5300 FAX : +44-1932-45-5325

www.samsungsecurity.com
www.samsungtechwin.com

P/NO. : Z6806-1243-01A