SAMSUNG TECHWIN

High Resolution Day & Night Dome Camera

User Manual

SCD-1080P/1080PD

Please read the operation manual carefullly before use..

SAMSUNG

High Resolution Day & Night Dome Camera

User Manual

Copyright
©2012 Samsung Techwin Co., Ltd. All rights reserved.

Trademark

SAMSUNG TECHWIN SAMSUNG is the registered logo of Samsung Techwin Co., Ltd.
The name of this product is the registered trademark of Samsung Techwin Co., Ltd.
Other trademarks mentioned in this manual are the registered trademark of their respective company.

Restriction

Samsung Techwin Co., Ltd shall reserve the copyright of this document. Under no circumstances, this document shall be reproduced, distributed or changed, partially or wholly, without formal authorization of Samsung Techwin.

Disclaimer

Samsung Techwin makes the best to verify the integrity and correctness of the contents in this document, but no formal guarantee shall be provided. Use of this document and the subsequent results shall be entirely on the user's own responsibility. Samsung Techwin reserves the right to change the contents of this document without prior notice.

❖ **Design and specifications are subject to change without prior notice.**

Before operating the camera, confirm the camera model and correct input power voltage.
To help you understand this manual thoroughly, we'll introduce our model description.

■ SCD-1080 SERIES

- **PAL MODEL**

  SCD-1080P/1080PD

- **POWER SUPPLY**

  SCD-1080P: DC12V, AC24V
  SCD-1080PD: DC12V

safety information

CAUTION

RISK OF ELECTRIC SHOCK.
DO NOT OPEN

CAUTION: TO REDUCE THE RISK OF ELECTRIC SHOCK, DO NOT REMOVE COVER (OR BACK) NO USER SERVICEABLE PARTS INSIDE. REFER SERVICING TO QUALIFIED SERVICE PERSONNEL.

This symbol indicates that dangerous voltage consisting a risk of electric shock is present within this unit.

This exclamation point symbol is intended to alert the user to the presence of important operating and maintenance (servicing) instructions in the literature accompanying the appliance.

WARNING

- To prevent damage which may result in fire or electric shock hazard, do not expose this appliance to rain or moisture.
- To prevent injury, this apparatus must be securely attached to the floor/wall in accordance with the installation instructions.

WARNING

1. Be sure to use only the standard adapter that is specified in the specification sheet. Using any other adapter could cause fire, electrical shock, or damage to the product.
2. Incorrectly connecting the power supply or replacing battery may cause explosion, fire, electric shock, or damage to the product.

3. Do not connect multiple cameras to a single adapter. Exceeding the capacity may cause abnormal heat generation or fire.
4. Securely plug the power cord into the power receptacle. insecure connection may cause fire.
5. When installing the camera, fasten it securely and firmly. The fall of camera may cause personal injury.
6. Do not place conductive objects (e.g. screwdrivers, coins, metal parts, etc.) or containers filled with water on top of the camera. doing so may cause personal injury due to fire, electric shock, or falling objects.
7. Do not install the unit in humid, dusty, or sooty locations. doing so may cause fire or electric shock.
8. If any unusual smells or smoke come from the unit, stop using the product. in such case, immediately disconnect the power source and contact the service center. continued use in such a condition may cause fire or electric shock.
9. If this product fails to operate normally, contact the nearest service center. never disassemble or modify this product in any way. (samsung is not liable for problems caused by unauthorized modifications or attempted repair.)
10. When cleaning, do not spray water directly onto parts of the product. doing so may cause fire or electric shock.

CAUTION

1. Do not drop objects on the product or apply strong shock to it. Keep away from a location subject to excessive vibrationor magnetic interference.
2. Do not install in a location subject to high temperature (over 55°C), low temperature (below -10°C), or high humidity. Doing so may cause fire or electric shock.
3. If you want to relocate the already installed product, be sure to turn off the power and then move or reinstall it.
4. Remove the power plug from the outlet when then there is a lightning. Neglecting to do so may cause fire or damage to the product.
5. Keep out of direct sunlight and heat radiation sources. It may cause fire.
6. Install it in a place with good ventilation.
7. Avoid aiming the camera directly towards extremely bright objects such as sun, as this may damage the CCD image sensor.
8. Apparatus shall not be exposed to dripping or splashing and no objects filled with liquids, such as vases, shall be placed on the apparatus.

9. The Mains plug is used as a disconnect device and shall stay readily operable at any time.
10. Do not expose the camera to radioactivity. Radioactivity exposure may damage the CCD.

Correct Disposal of This Product (Waste Electrical & Electronic Equipment)

(Applicable in the European Union and other European countries with separate collection systems)

This marking on the product, accessories or literature indicates that the product and its electronic accessories (e.g. charger, headset, USB cable) should not be disposed of with other household waste at the end of their working life. To prevent possible harm to the environment or human health from uncontrolled waste disposal, please separate these items from other types of waste and recycle them responsibly to promote the sustainable reuse of material resources.

Household users should contact either the retailer where they purchased this product, or their local government office, for details of where and how they can take these items for environmentally safe recycling.

Business users should contact their supplier and check the terms and conditions of the purchase contract. This product and its electronic accessories should not be mixed with other commercial wastes for disposal.

Correct disposal of batteries in this product

(Applicable in the European Union and other European countries with separate battery return systems.)

This marking on the battery, manual or packaging indicates that the batteries in this product should not be disposed of with other household waste at the end of their working life. Where marked, the chemical symbols Hg, Cd or Pb indicate that the battery contains mercury, cadmium or lead above the reference levels in EC Directive 2006/66. If batteries are not properly disposed of, these substances can cause harm to human health or the environment.

To protect natural resources and to promote material reuse, please separate batteries from other types of waste and recycle them through your local, free battery return system.

Samsung Techwin cares for the environment at all product manufacturing stages to preserve the environment, and is taking a number of steps to provide customers with more environment-friendly products.The Eco mark represents Samsung Techwin's will to create environment-friendly products, and indicates that the product satisfies the EU RoHS Directive.

important safety instructions

1. Read these instructions.
2. Keep these instructions.
3. Heed all warnings.
4. Follow all instructions.
5. Do not use this apparatus near water.
6. Clean only with dry cloth.
7. Do not block any ventilation openings. Install in accordance with the manufacturer's instructions.
8. Do not install near any heat sources such as radiators, heat registers, or other apparatus (including amplifiers) that produce heat.
9. Do not defeat the safety purpose of the polarized or grounding-type plug. A polarized plug has two blades with one wider than the other. A grounding type plug has two blades and a third grounding prong. The wide blade or the third prong is provided for your safety. If the provided plug does not fit into your outlet, consult an electrician for replacement of the obsolete outlet.
10. Protect the power cord from being walked on or pinched particularly at plugs, convenience receptacles, and the point where they exit from the apparatus.
11. Only use attachments/accessories specified by the manufacturer.
12. Use only with cart, stand, tripod, bracket, or table specified by the manufacturer, or sold with the apparatus.
13. Unplug this apparatus when a card is used. Use caution when moving the cart/ apparatus combination to avoid injury from tip-over.
14. Refer all servicing to qualified service personnel. Servicing is required when the apparatus has been damaged in any way, such as powersupply cord or plug is damaged, liquid has been spilled or objects have fallen into the apparatus, the apparatus has been exposed to rain or moisture, does not operate normally, or has been dropped.

Apparatus shall not be exposed to dripping or splashing and no objects filled with liquids, such as vases, shall be placed on the apparatus

contents

INTRODUCTION 9

9 Features
10 What's included
11 Component names and functions

INSTALLATION 12

12 Before Installation
12 Installation
14 Adjust the panning and tilting while watching the monitor

CONNECTION 15

15 Connecting to Monitor
15 Connecting to Power
16 Using Coaxial Communications

SETUP 18

18 Menu Configuration
18 Menu Setup

TROUBLESHOOTING 27

27 Troubleshooting

SPECIFICATIONS 28

28 Specifications
30 Dimension

FEATURES

- **High Resolution**
  By adopting a diagonal 6mm(1/3”) 470,000 pixel SONY CCD, the camera produces clear picture quality with a horizontal resolution of 600TV lines in color mode and 650TV lines for BW.
- **Excellent Sensitivity**
  The built-in high sensitivity COLOR CCD produces a clear image.
  0.15Lux(50IRE, @F1.2)
- **SSNR (Samsung Super Noise Reduction) Function**
  The high-performance B2 DSP chip effectively removes low-light gain noise and afterimage to provide clear images even in dark environments.
- **Day & Night**
  This camera has a function that automatically selects the mode that is appropriate for daytime or night-time conditions. The COLOR mode operates in daytime conditions to provide optimum colors, and B/W mode operates in night-time conditions to enhance the definition of the image.
- **Defog**
  The camera is able to recognize the concerntration of fog in the image, and automatically defog, correct image of the bad weather such as fog, rain, mist, fumes, etc to make it clear.
- **SSDR (Samsung Super Dynamic Range)**
  For images with high contrast between bright and dark areas from difficult lighting conditions such as backlighting, this camera selectively illuminates darker areas while retaining the same light level for brighter areas to even out the overall brightness.
- **Miscellaneous Functions**
  HLC(High Light Compensation), FLIP, SHARPNESS and PRIVACY functions are provided.

introduction

- **Communication**
  Coaxial communication methods are supported.
  - Protocol : Pelco Coaxitron

- **OSD**
  The camera control is convenient by using 14 different foreign language O.S.D.
  English, French, German, Spanish, Italian, Czech, Danish, Polish, Portuguese, Russian, Romanian, Serbian, Swedish, Turkish

WHAT'S INCLUDED

Check if the following items are included in the product package.

CAMERA

User Manual

Quick Setup Guide

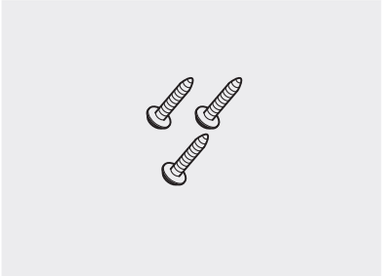

M4 Tapping Screw 3EA

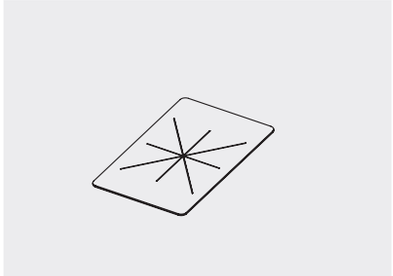

Dustproof plate

* The illustration above may not be exactly same as the real parts, for reference only.

COMPONENT NAMES AND FUNCTIONS

FRONT

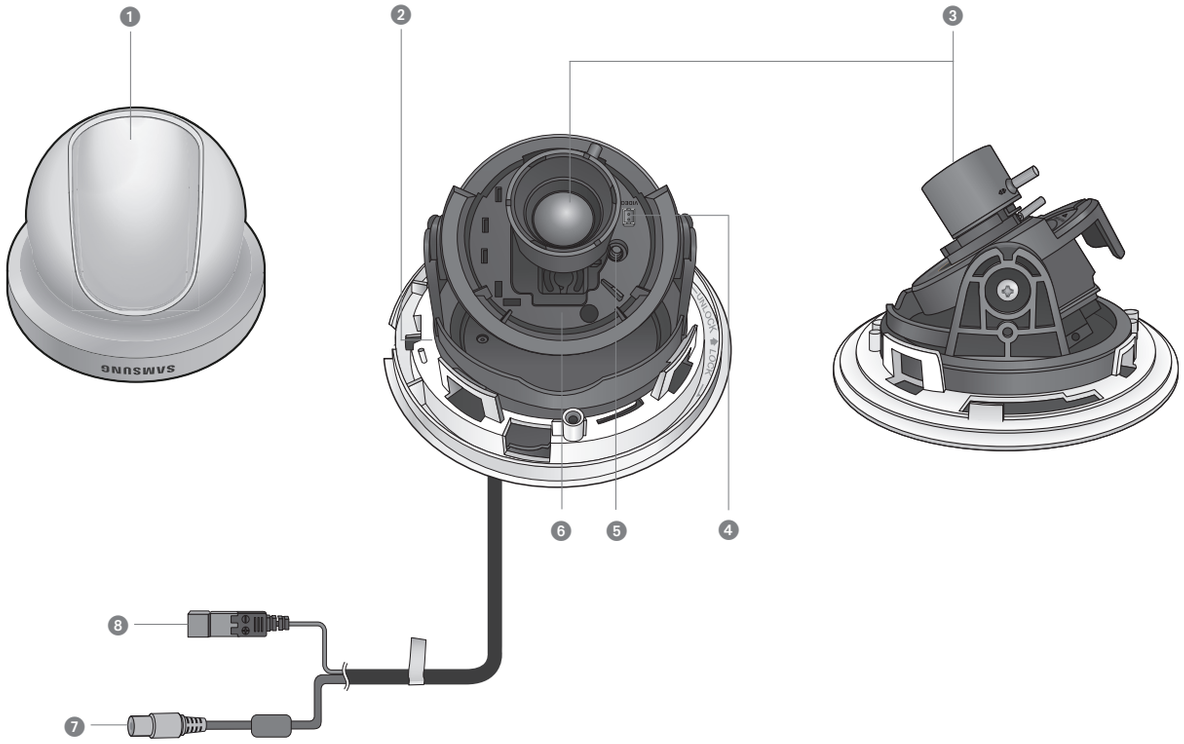

1. **Dome Cover**
2. **Pan Base : Control panning angle of camera.**
3. **3.6x Lens Module :** 2.8~10mm(F1.2)
4. **Video Output Terminal to Monitor**
5. **Function Setup switch :** Display the menu on the screen and move the cursor to four directions to confirm status or after changing a selected item.
6. **Rotate Base : Control rotating angle of camera.**
7. **Video Output Jack**
8. **Power Input Terminal**

BEFORE INSTALLATION

Before installing your camera, you have to read the following cautions:

- You have to check whether the location (ceiling or wall) can bear five times the weight of your camera.
- Don't let the cable to be caught in improper place or the electric line cover to be damaged. Otherwise it may cause a breakdown or fire.
- Before installing your camera, you have to adjust the lens focus, zoom, and switch settings.
- When installing your camera, don't allow any person to approach the installation site. If you have any valuable things under the place, move them away.

INSTALLATION

1) Pry up the outer casing with a flat-head screwdriver to remove the protective cover from the Main body of the camera.

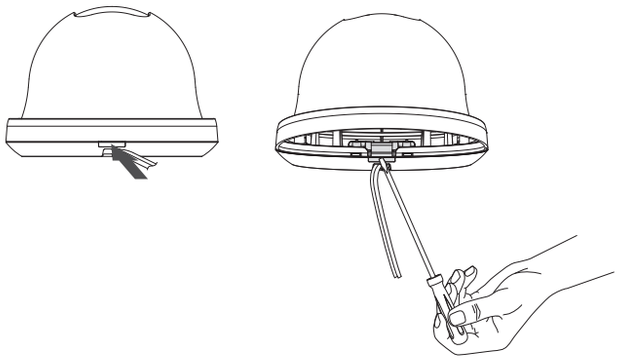

2) Remove the Mount bracket from the Main body by rotating the Main body in the UNLOCK direction while pushing the Lock releaser outward. If it is not easily done, rotate the Mount bracket in the LOCK direction while holding small holes on the Mount bracket.

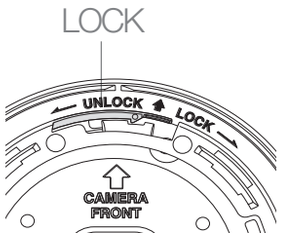

3) Place the separated ceiling bracket so that the “Front” side faces the area to be monitored and install it with the M4 tapping screws(see Figure-1).

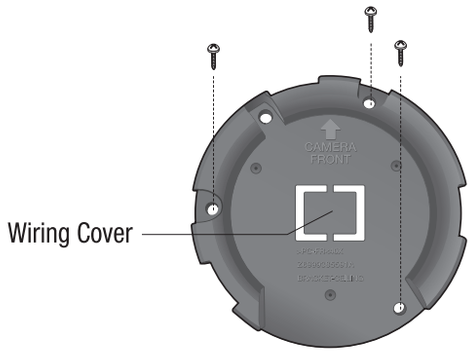

Figure-1

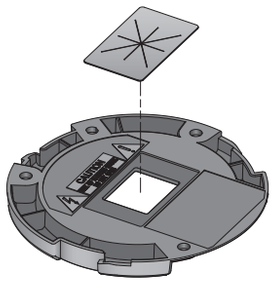

Figure-2

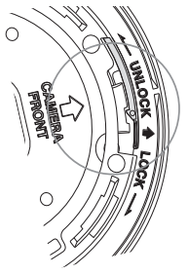

Figure-3

4) If a hole has been drilled on the bracket installation surface for cable access, press down to remove the Cable Stopper and attach the provided dustproof plate to it (Figure-2), and arrange the cables through the plate.
   - The dust-proof plate is to prevent outside dust from inflow to the wiring compartment.
5) Now attach the Main body to the Mount bracket by rotating it in the LOCK direction after aligningthe Groove mark on the Main body with the wide groove around the CAMERA FRONT inlay.(Figure-3)
6) Adjust the camera lens to face the area to be monitored.
7) Finally attach the Cover dome to the Main body by pressing it until a “click” sound is heard after aligning the bump inside the Cover dome with the groove mark on the Main body.

Notes

- **The installation should be done by qualified service personnel or system installers.**
- **If the ceiling material is not strong enough to hold the installation screws, the camera may fall off. Reinforce the ceiling as needed.**
- **To change the position of the cable, take away the Hole Cover, attach the provided dustproof plate and pass the cable through.**

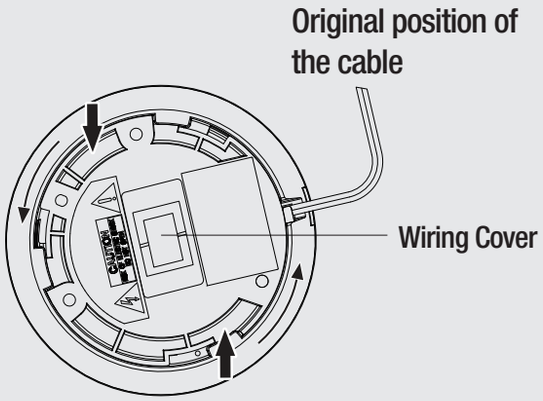

ADJUST THE PANNING AND TILTING WHILE WATCHING THE MONITOR

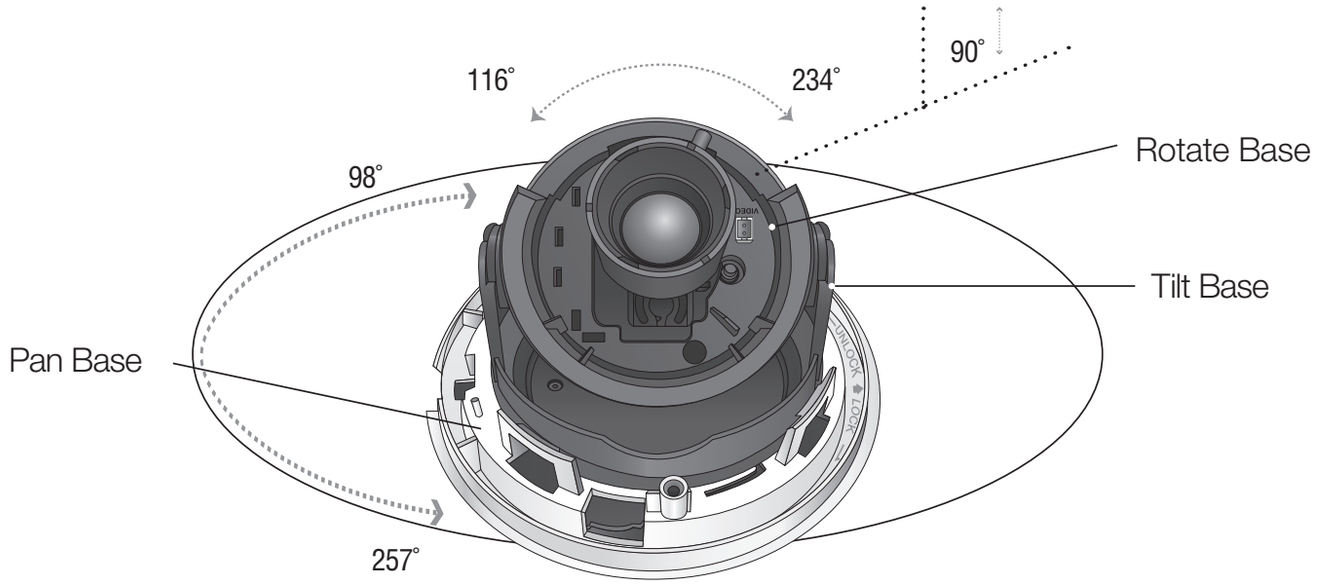

1) You can adjust the camera to point in any direction by using the pan, Tilt, Rotate mechanism.
   - Pan Base can rotates by +116°~ -234°（total 350°)
   - Tilt Base covers 90˚ angle（0°~90°）。
   - Rotate Base moves by +257°~ -98°（total 355°)
2) Methods of adjustment
   - The case of wall installation
     1. After mounting the camera on a wall, adjusting the panning angle so that the camera can face the direction to monitor when tilted.
     2. Adjust the tilting angle by rotating the tilt base.
     3. Loosen the rotate base hold screw and adjust rotate base for the best view.
     4. Tighten the rotate base hold screw.
   - The case of ceiling installation
     1. After mounting the camera on a ceiling, adjusting the panning angle to the correct viewing position by rotating the pan base.
     2. Adjust the tilting angle by rotating the tilt base.
     3. Loosen the rotate base hold screw and adjust rotate base for the best view.
     4. Tighten the rotate base hold screw.

CONNECTING TO MONITOR

Connect the Video Output jack to the VIDEO-IN jack of monitor.

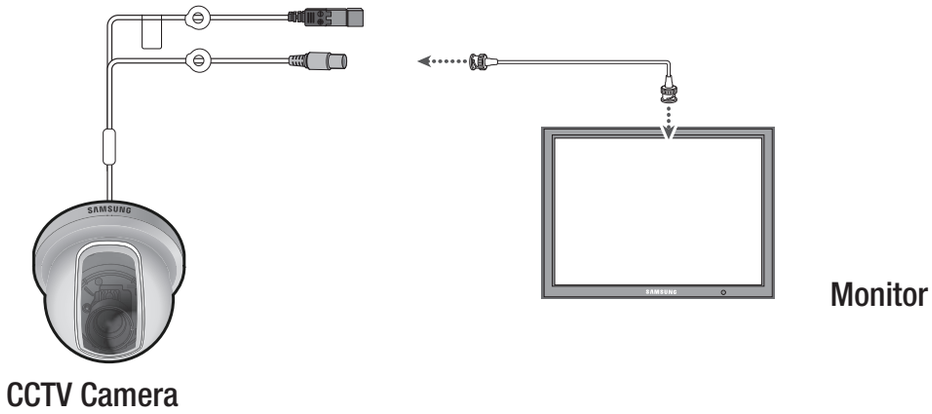

- As the connecting method varies with the instruments, refer to the manual supplied with the instrument.
- Only connect the cable when the power is turned off.

CONNECTING TO POWER

Connect the adaptor to the power input connector as shown in the figure below.
The recommended adaptor specification for SCD-1080P is DC12V/500mA or AC24V/500mA, for SCD-1080PD is DC12V/500mA.

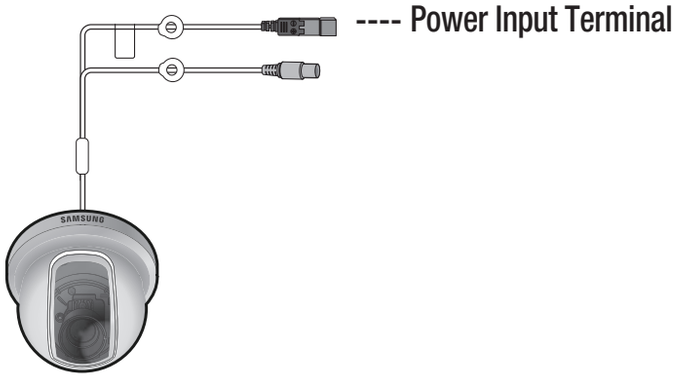

When the resistance value of copper wire is at [20°C(68°F)]

Copper wire size (AWG)	#24 (0.22mm^2)	#22 (0.33mm^2)	#20 (0.52mm^2)	#18 (0.83mm^2)
Resistance (Ω/m)	0.078	0.050	0.030	0.018
Voltage Drop (V/m)	0.028	0.018	0.011	0.006

- As shown in the table above, voltage decreases as the wire gets longer. Therefore use of an excessively long adaptor output line for connection to the camera may affect the performance of the camera.

  * Standard voltage for camera operation:
    SCD-1080P: DC 12V ±10%, AC 24V ± 10%
    SCD-1080PD: DC 12V ±10%
  * There may be some deviation in voltage drop depending on the type of wire and the manufacturer.

- Be sure to connect power only after all the installation is complete.
- Note that AC / DC adaptor is not supplied with camera.

USING COAXIAL COMMUNICATIONS

- Coaxial Communications System
- OSD Control method

CAMERA	DVR	CONTROLLER
SET	MENU/ENTER	OSD KEY
UP	UP KEY	JOYSTICK UP
DOWN	DOWN KEY	JOYSTICK DOWN
LEFT	LEFT KEY	JOYSTICK LEFT
RIGHT	RIGHT KEY	JOYSTICK RIGHT

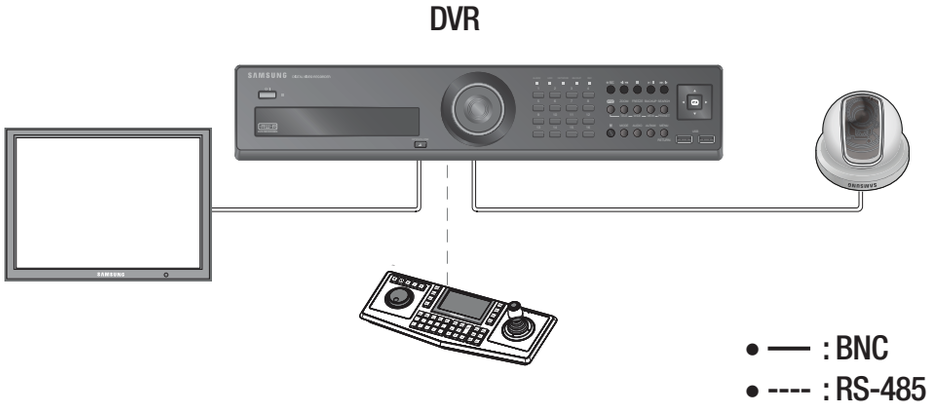

-Video Cable

The camera's video output port is connected to the monitor with a BNC coaxial cable, shown below : If the distance between the camera and the monitor exceeds the recommended maximum, please use an auxiliary video amp.

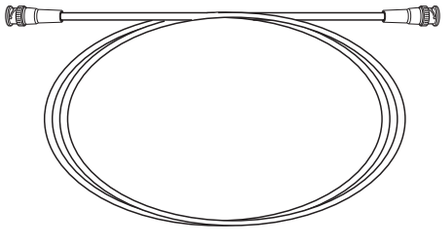

Distance	Recommended Cable Specification
300m	3C2V(RG-59/U)
450m	5C2V(RG-6/U)
600m	7C2V(RG-11/U)

- It is recommended that pure copper coax cable is used and not copper coated steel, as this will cause issues with the communication over the coaxial cable.
- To ensure picture quality, only single-channel video output connector can be used while camera connected to other video equipments.

MENU CONFIGURATION

MAIN SETUP				
LENS	● DC			
EXPOSURE	● BRIGHTNESS	● SHUTTER	● AGC	● RETURN
DEFOG	● AUTO	● OFF	● MANUAL	
WHITE BAL	● ATW ● AWC→SET	● OUTDOOR	● INDOOR	● MANUAL
BACKLIGHT	● OFF	● HLC	● USER BLC	
SSNR	● ON	● OFF		
DAY/NIGHT	● AUTO	● COLOR	● B/W	
SPECIAL	● MONITOR ● REVERSE ● LANGUAGE	● CAM TITLE ● SHARPNESS ● RETURN	● PRIVACY ● COAX	● SYNC ● SSDR
EXIT	● SAVE	● NOT SAVE	● RESET	

MENU SETUP

Use the Function Setup switch within the camera.

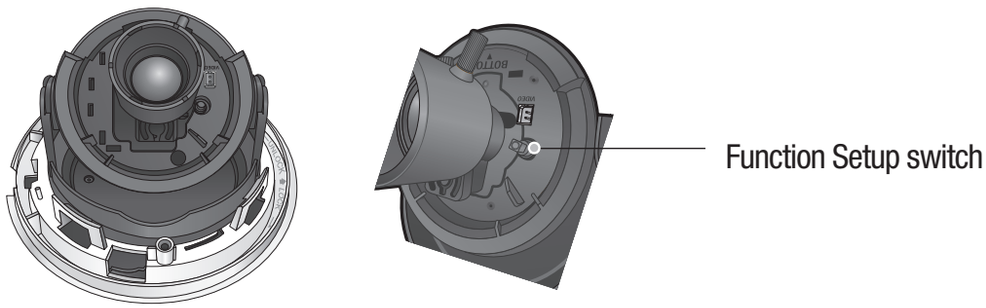

1. Press the Function Setup switch.
   - Main setup menu is displayed on the monitor screen.

Select the function using the Function Setup switch up/ down.

```
MAIN SETUP
▶ 1. LENS                DC ↵
  2.EXPOSURE ↵
  3.DEFOG                OFF
  4.WHITE BAL            ATW
  5.BACKLIGHT            OFF
  6.SSNR                 ON ↵
  7.DAY/NIGHT            AUTO ↵
  8.SPECIAL ↵
  9.EXIT                 SAVE
```

Change the status using the Function Setup switch left/right.

2. Select a desired function using the Function Setup switch.
   - Place the cursor over a desired item.
3. Set up a selected item by using the Function Setup switch.
4. To finish the setting, select 'EXIT' and press the Function Setup switch.

- An item with the ↵ icon also has sub menus. To select a sub menu, select an item with the icon and press the Function Setup switch.
- An item with the – – – icon is unavailable due to function settings.

LENS

Using this function, you can control the screen brightness.

1. When the SETUP menu screen is displayed, select 'LENS' by using the Function Setup switch so that the arrow indicates 'LENS'.
2. The Lens mode has sub menu site as listed below.
   - BRIGHTNESS : Adjusts the video brightness.
   - FOCUS ADJ : To adjust the lens focus correctly, you must activate the Focus Settings mode. To activate the Focus Settings mode, adjust the lens focus, and then deactivate the settings mode.
   - You can adjust the shutter value of manual shutter mode.

```
DC LENS
▶ 1. BRIGHTNESS  IIIIIIIIIIII*IIIIIIIIIIII  10
  2. FOCUS ADJ ↵
  3. RETURN ↵
```

EXPOSURE

1. When the SETUP menu screen is displayed, select EXPOSURE by using the Function Setup switch so that the arrow indicates 'EXPOSURE'.
2. Select a desired mode using the Function Setup switch.

```
        EXPOSURE SETUP
▶ 1. BRIGHTNESS    IIIIIIIII*IIIIIIII 10
  2. SHUTTER            MANUAL↵
  3. AGC                 MIDDLE
  4. RETURN↵
```

- BRIGHTNESS : Adjusts the video brightness.
- SHUTTER : You can select shutter mode.
  - MANUAL : You can control shutter speed manually. (1/50~1/120,000)
  - A.FLK : Select this when you experience picture flicker, which can happen when there is a clash with the frequency of the installed lighting.
- AGC (AUTO GAIN CONTROL)（OFF/LOW/MID/HIGH) : The higher the gain level, the brighter the screen- but the higher the noise.
- RETURN：Select this to save the changes in the EXPOSURE menu and return to the SETUP menu.

DEFOGGING

Through the defogging function, camera can automatically recognize fog concentration of the image, defog, self correct in hazy, rainy, flue gas and other inclement weather to get a clear image.

1. When the SETUP menu screen is displayed, select 'DEFOG' by using the Function Setup switch.
2. Select a desired mode.

```
        DEFOG SETUP
▶ 1.LEVEL                MIDDLE
  2.RETURN↵
```

- AUTO: The camera will automatically correct image according to the defogging level (low, middle, high) set by the user.
- Manual: The camera will adjust the definition of the image according to user's preferences through the defogging level (low, middle, high).
- OFF: Turn off Defogging function.

- Defogging and SSDR function cannot be run simultaneously. When defogging function is set to AUTO or MANUAL mode, SSDR function is not available. When SSDR functions is turned on, defogging would become inactive.

WHITE BAL(WHITE BALANCE)

Use the White Balance function to adjust the screen color.

1. When the SETUP menu screen is displayed, select 'White Bal' by using the Function Setup switch so that the arrow indicates 'White Bal'.
2. Select a desired mode using the Function Setup switch.
   ※ Select one of the following 5 modes, as appropriate for your purpose.
   - **ATW:** Select this when the color temperature is between 1,700°K and 11,000°K.
   - **OUTDOOR** : Select this when the color temperature is between 1,700°K and 11,000°K.(sodium light inclusion)
   - **INDOOR** : Select this when the color temperature is between 4,500°K and 8,500°K.
   - **MANUAL** : Select this to fine-tune White Balance manually. Set White Balance first by using the ATW or AWC mode. After that switch to MANUAL mode, fine-tune the White Balance and then press the Function Setup switch.

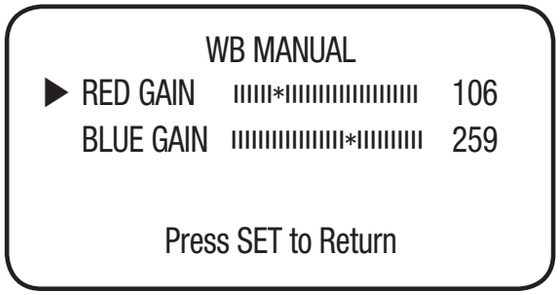

   - **AWC→SET** : To find the optimal luminance level for the current environment, point the camera towards a sheet of white paper and press the Function Setup switch. If the environment changes, readjust it.

- White Balance may not work properly under the following conditions. In this case, select AWC→SET mode.

❶ When the color temperature of the environment surrounding the subject is out of the control range (e.g. clear sky or sunset).
❷ When the ambient illumination of the subject is dim.
❸ If the camera is directed towards a fluorescent light or is installed in a place where illumination changes dramatically, the White Balance operation may become unstable.

BACKLIGHT

The SCD-1080 is designed so that it delivers a distinctive subject and background at the same time, even when the subject is in backlight, by adopting a function of the proprietary B2 DSP chip.

1. When the SETUP menu screen is displayed, select 'BACKLIGHT' by using the Function Setup switch so that the arrow indicates BACKLIGHT.
2. Select a desired mode using the Function Setup switch depending on the camera purpose.
   - **USER BLC** : Enables a user to directly select a desired area from a picture and to view the area more clearly.
     - LEVEL : Adjusts the brightness level of a monitoring area.
     - TOP/BOTTOM/LEFT/RIGHT : Adjust the area to be enhanced.
   - **HLC (High Light Compensation) :**
     This function masks any areas of peak white light, this minimizes whiteout due to over exposure and thus preserve much of the on-screen details that are within the camera view.
     - LEVEL : Adjusts the brightness level of a monitoring area.
     - LIMIT : Enable to change the operating condition.
     - MASK COLOR :Change the color of the masking area. (Black, Red, Blue, Gray, Magenta)
   - **OFF :** Not being used.

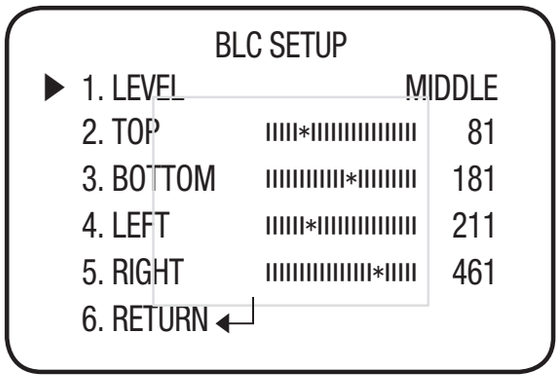

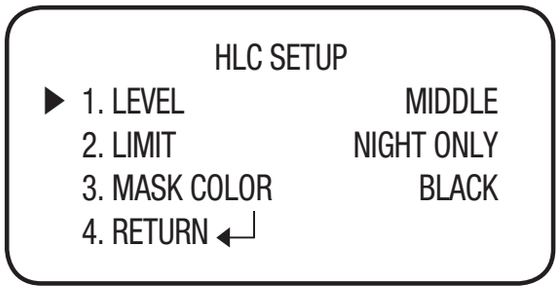

SSNR

This function reduces the background noise in a low luminance environment.

1. When the SETUP menu screen is displayed, select 'SSNR' by using the Function Setup switch so that the arrow indicates 'SSNR'.
2. Select a desired mode using the Function Setup switch.

- **OFF** : Deactivates SSNR. Noise is not reduced.
- **ON** : Activates SSNR so that noise is reduced.

3. Set the SSNR mode to 'ON' and press the Function Setup switch.
4. Then you can adjust the noise reduction level.

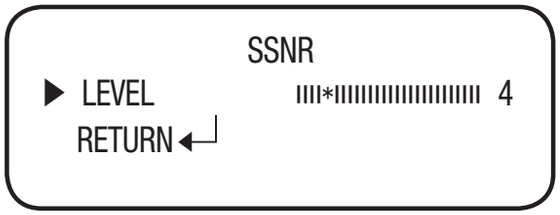

- You cannot set the SSNR to 'ON' or 'OFF' when the AGC mode of the EXPOSURE menu is 'OFF'.
- When adjusting the noise reduction level of the SSNR mode, remember that the higher the level set, the more the noise level will be reduced but that after image may also occur.

DAY/NIGHT

You can display pictures in color or black and white.

1. When the SETUP menu screen is displayed, select 'DAY/NIGHT' by using the Up and Down buttons so that the arrow indicates 'DAY/NIGHT'.
2. Select a desired mode using the Left and Right buttons according to the picture display you want.

- **AUTO** : The mode is switched to 'Color' in a normal environment,but switches to 'B/W' mode when ambient illumination is low. To set up the switching time for AUTO mode, press the Function Setup switch. You can turn on or off the burst signal on B/W mode.
  - DWELL TIME : You can select the duration time about changing the day/night mode.
    → 3s, 5s, 7s, 10s, 15s, 20s, 30s, 40s, 60s
  - BURST MODE : You can turn on or off the burst signal on B/W mode.

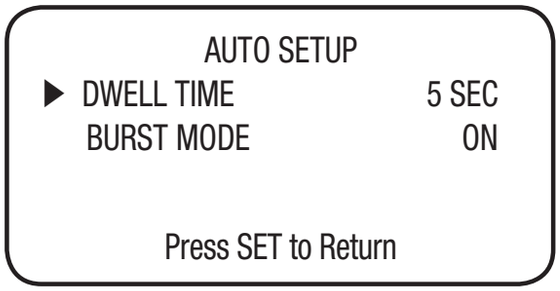

- **COLOR** : The picture is always displayed in color.
- **B/W** : The picture is always displayed in black and white. You can turn on or off the burst signal on B/W mode.

SPECIAL

1. When the SETUP menu screen is displayed, select 'SPECIAL' by using the Function Setup switch so that the arrow indicates 'SPECIAL'.
2. Select a desired mode using the Function Setup switch.
   - **Monitor** : Please change the settings value of video appropriate to your monitor.
     - LCD: Please select this menu item when using an LCD monitor. You can change the gamma, PED level and color gain in the sub menus.
     - USER : Please use this menu item when using a monitor other than standard ones. You can change the gamma, PED level and color gain in the sub menus.

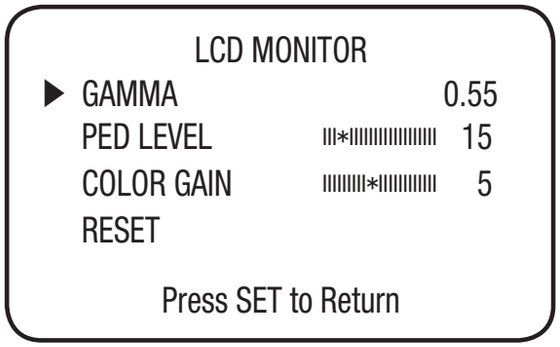

   - **CAM TITLE :** If you enter a title, the title will appear on the monitor.
     1. If the SPECIAL menu screen is displayed, use the Function Setup switch so that the arrow indicates 'CAM TITLE'.
     2. Set it to 'ON' by using the Function Setup switch.
     3. Press the Function Setup switch.
     4. Use the Function Setup switch to move to a desired letter and select the letter by pressing the switch. Repeat this to enter multiple letters. You can enter up to 15 letters. Move the cursor to → for entering a space, then press the Function Setup switch, the cursor will skip to the next.
     5. Enter a title, move the cursor to 'POS' and press the Function Setup switch. The entered title appears on the screen. Select the position to display the title on the screen by using the Function Setup switch and press. When the position is determined, select 'END' and press the Function Setup switch to return to the SPECIAL menu.

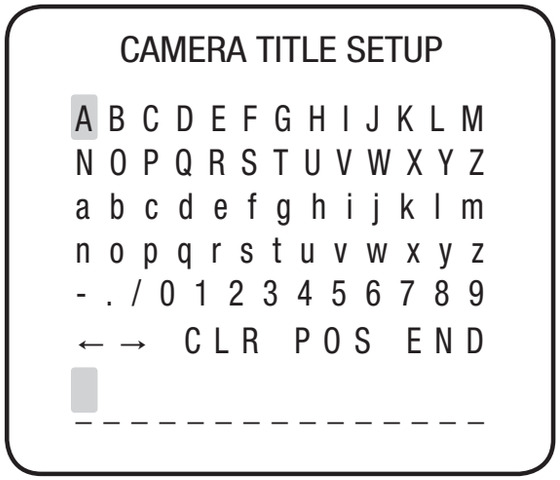

- **PRIVACY** : Mask an area you want to hide on the screen.
  1. When the SPECIAL menu screen is displayed, press the Function Setup switch so that the arrow indicates 'PRIVACY'.
  2. Set up the mode using the Function Setup switch.
  - AREA : You can select up to 4 PRIVACY areas.
  - MODE: Determines whether to use the area selected.
  - MASK COLOR: Determine area color. You can select GREEN, RED, BLUE, BLACK, WHITE and GRAY.
  - SEL POS/POS :Adjust the size and position of the selected area.
  - RETURN : Select this to save the PRIVACY menu settings and return to the SPECIAL menu.

```
        PRIVACY AREA SETUP
▶ 1.AREA                AREA1
  2.MODE                  OFF
  3.MASK COLOR          GREEN
  4.SEL POS              LEFT
  5.POS          *IIIIIIIIIIIIIIIIIIIII  42
  6.RETURN ↵
```

- **SYNC** : In areas where the supply is at 50Hz(PAL), you can synchronize the output phase of multiple cameras using the power synchronization function (Line-Lock) without using a synchronization signal generator.
  - INT: Internal Synchronization Type
  - L/L : Power Synchronization Type, Line-lock
  1. Press the Function Setup switch.
  2. You can select a desired phase from 0 to 359 when select 'phase'.

```
              SYNC
▶ PHASE        *IIIIIIIIIIIIIIIIIIIII   0
        Press SET to Return
```

- When using AC power at 50Hz(PAL) frequency, you can use the L/L type synchronization.
- When the power is DC 12V, the SYNC menu is fixed to the 'INT' mode.

- **REVERSE** : You can reverse the picture.
  - OFF : You don't reverse the picture.
  - H-REV : You can flip the picture horizontally on the screen.
- **SHARPNESS** : As you increase this value, the picture outline becomes stronger and clearer. Adjust this value appropriately depending on the sharpness of the picture.
- **COAX**: COAX option is set to "On" will specify the use of coaxial communication.

```
           SHARPNESS
▶ LEVEL        IIIII*IIIIIIIIIIIIIIIII   7
        Press SET to Return
```

- **SSDR(Samsung Super Dynamic Range)**
  SSDR illuminates darker areas of an image while retaining the same light level for brighter areas to even out the overall brightness of images with high contrast between bright and dark areas.

  1. When the SETUP menu screen is displayed, select 'SSDR' by using the Function Setup switch so that the arrow indicates 'SSDR'.
  2. Use the Function Setup switch to change the SSDR level in the sub menu according to the contrast between bright and dark areas.
- LANGUAGE : You can select the menu language according to your requirements.
- RETURN : Select this to save the SPECIAL menu settings and return to the MAIN SETUP menu.

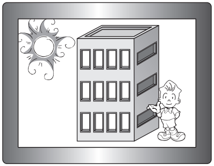

SSDR ON

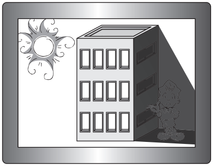

SSDR OFF

EXIT

Select a desired EXIT mode using the Function Setup switch depending on the camera purpose.

- **SAVE** : Save the current settings and exit the MAIN SETUP menu.
- **NOT SAVE** : Do not save the current settings and exit the MAIN SETUP menu.
- **RESET**: Resets the camera settings to the factory defaults. Monitor and COAX settings are not initialized.

TROUBLESHOOTING

If you have trouble operating your camera, refer to the following table. If the guidelines do not enable you to solve the problem, contact an authorized technician.

PROBLEM	SOLUTION
Nothing appears on the screen.	▶ Check that the power cord and line connection between the camera and monitor are fixed properly. ▶ Check that you have properly connected VIDEO cable to the camera VIDEO output jack.
The image on the screen is dim.	▶ Is the lens stained with dirt? Clean your lens with a soft, clean cloth. ▶ Check the monitor and DVR settings. ▶ If the camera is exposed to very strong light, change the camera position.
The image on the screen is dark.	▶ Adjust the contrast feature of the monitor or DVR. ▶ If you have an intermediate device, set the 75Ω / Hi-z properly.
The camera is not working properly, and the surface of the camera is hot.	▶ Check that you have properly connected the camera to an appropriate power source.
The DAY/NIGHT function does not work.	▶ Check that AGC of EXPOSURE SETUP menu is 'OFF'.
Color is not correct.	▶ Check the setting of WHITE BAL SETUP menu .
The screen flickers continually.	▶ Check that the camera is not pointing at the sun.
When coaxial communication is not available	▶Make sure that the camera and monitor are installed within the recommended distance. ▶Use the video amplifier equivalent to coaxitron if the recommended installation distance is exceeded.

SPECIFICATIONS

	SCD-1080P	SCD-1080PD
Video		
Imaging Device	1/3” Super HAD CCD II (Double Scan)	
Total Pixels	795(H) x 596(V)	
Effective Pixels	752(H) x 582(V)	
Scanning System	2:1 Interlace	
Synchronization	Internal / Line-Lock	Internal
Frequency	H: 15.625KHz, V: 50Hz	
Horizontal Resolution	COLOR : 600TVL, B/W: 650TVL	
Min. Illumination	0.15 Lux (50IRE, @F1.2)(AGC: High)	
S/N (Y Signal)	52dB (Weight On, AGC Off)	
Video Output	CVBS : 1.0Vp-p, 75Ω composite	
Lens Type		
Zoom Ratio	2.8~10mm(3.6x)	
Max. Aperture Ratio	1:1.2(Wide)~2.8(Tele)	
Angular Field of View	H: 94.4°(Wide)~28°(Tele)/ V: 69.2°(H) x 21°(V)	
Min. Object Distance	0.2m	
Lens Type	DC Auto Iris	
Mount Type	Board Type	
PAN / TILT / ROTATE		
Pan / Tilt / Rotate Range	0°~350° / 0°~90° / 0°~355°	

	SCD-1080P	SCD-1080PD
Operational		
ON Screen Display	English, French, German, Spanish, Italian, Czech, Danish, Polish, Portuguese, Russian, Romanian, Serbian, Swedish, Turkish	
Camera Title	On / Off (Displayed 15 Characters)	
Day & Night	AUTO (Electrical)/COLOR / BW	
Backlight Compensation	OFF/USER BLC / HLC	
SSDR	On / Off	
Noise Filter(SSNR)	On / Off	
Privacy Masking	On / Off (4 Programmable zones)	
Gain Control	Low / High / Middle / Off	
White Balance	ATW / Outdoor / Indoor / Manual / AWC->SET (1,700°K ~ 11,000°K)	
Electronic Shutter Speed	1/50~1/120,000 sec	
Communication	Coaxial Control (SPC-300 Compatible)	
Protocol	Coaxial(Pelco-C Coaxitron)	
ENVIRONMENTAL		
Operating Temperature / Humidity	-10°C ~ +55°C / Less than 90% RH	
ELECTRICAL		
Input Voltage	AC 24V ± 10% , DC 12V±10%	DC 12V±10%
Power Consumption	2.8W	1.2W
MECHANICAL		
Color / Material	body : White / Plastic	
Dimension	Ø128 x 91mm	
Gross Weight	460g	345g

※ This specification can be changed without notice for performance improvement of product.

DIMENSION

Unit: mm

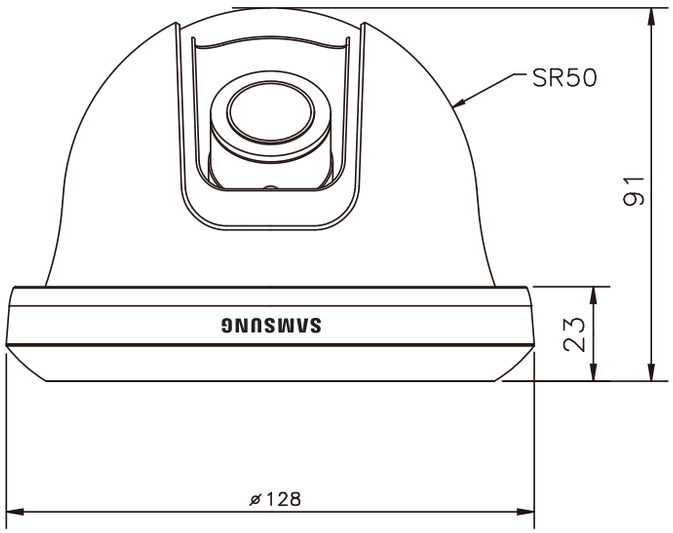

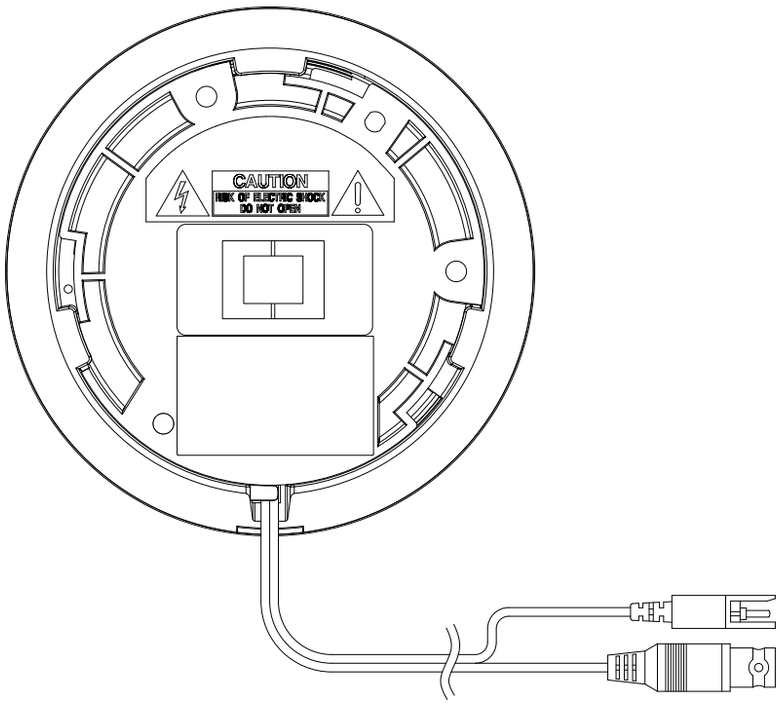

MEMO

SALES NETWORK

SAMSUNG TECHWIN CO., LTD.

Samsungtechwin R&D Center, 701, Sampyeong-dong, Bundang-gu, Seongnam-si, Gyeonggi-do, Korea, 463-400

TEL : +82-70-7147-8740~60, FAX : +82-31-8018-3745

SAMSUNG TECHWIN AMERICA Inc.

100 Challenger Rd. Suite 700 Ridgefield Park, NJ 07660

Toll Free : +1-877-213-1222 Direct : +1-201-325-6920

Fax : +1-201-373-0124

www.samsungcctvusa.com

SAMSUNG TECHWIN EUROPE LTD.

Samsung House, 1000 Hillswood Drive, Hillswood Business Park Chertsey, Surrey, UNITED KINGDOM KT16 OPS

TEL : +44-1932-45-5300, FAX : +44-1932-45-5325

www.samsungtechwin.com

www.samsungsecurity.com

P. No. :PT01-001353A