SAMSUNG TECHWIN

WEATHERPROOF NIGHT VISION CAMERA

User Manual

SCO-2030R
SCO-2040R

CE

SAMSUNG

WEATHERPROOF NIGHT VISION CAMERA

User Manual

Copyright
© 2013 Samsung Techwin Co., Ltd. All rights reserved.

Trademark

SAMSUNG TECHWIN is the registered logo of Samsung Techwin Co., Ltd.
The name of this product is the registered trademark of Samsung Techwin Co., Ltd.
Other trademarks mentioned in this manual are the registered trademark of their respective company.

Restriction

Samsung Techwin Co., Ltd shall reserve the copyright of this document. Under no circumstances, this document shall be reproduced, distributed or changed, partially or wholly, without formal authorization of Samsung Techwin.

Disclaimer

Samsung Techwin makes the best to verify the integrity and correctness of the contents in this document, but no formal guarantee shall be provided. Use of this document and the subsequent results shall be entirely on the user's own responsibility. Samsung Techwin reserves the right to change the contents of this document without prior notice.

Warranty

If the product does not operate properly in normal conditions, please let us know. Samsung Techwin will resolve the problem for free of charge. The warranty period is 3 years. However, the followings are excluded:

- If the system behaves abnormally because you run a program irrelevant to the system operation.
- Deteriorated performance or natural worn-out in process of time

❖ Design and specifications are subject to change without prior notice.

Before operating the camera, confirm the camera model and correct input power voltage.
To help you understand this manual thoroughly, we'll introduce our model description.

■ SCO-2030R/2040R SERIES

- NTSC MODEL
  SCO-2030R/2040RN
- PAL MODEL
  SCO-2030R/2040RP

- POWER SOURCE
  SCO-2030R/2040RN / SCO-2030R/2040RP : DC 12V

Safety information

CAUTION

RISK OF ELECTRIC SHOCK.
DO NOT OPEN

CAUTION: TO REDUCE THE RISK OF ELECTRIC SHOCK, DO NOT REMOVE COVER (OR BACK) NO USER SERVICEABLE PARTS INSIDE. REFER SERVICING TO QUALIFIED SERVICE PERSONNEL.

This symbol indicates that dangerous voltage consisting a risk of electric shock is present within this unit.

This exclamation point symbol is intended to alert the user to the presence of important operating and maintenance (servicing) instructions in the literature accompanying the appliance.

WARNING

- To prevent damage which may result in fire or electric shock hazard, do not expose this appliance to rain or moisture.
- To prevent injury, this apparatus must be securely attached to the floor/wall in accordance with the installation instructions.

WARNING

1. Be sure to use only the standard adapter that is specified in the specification sheet. Using any other adapter could cause fire, electrical shock, or damage to the product.
2. Incorrectly connecting the power supply or replacing battery may cause explosion, fire, electric shock, or damage to the product.
3. Do not connect multiple cameras to a single adapter. Exceeding the capacity may cause abnormal heat generation or fire.
4. Securely plug the power cord into the power receptacle. insecure connection may cause fire.
5. When installing the camera, fasten it securely and firmly. The fall of camera may cause personal injury.

6. Do not place conductive objects (e.g. screwdrivers, coins, metal parts, etc.) or containers filled with water on top of the camera. doing so may cause personal injury due to fire, electric shock, or falling objects.
7. Do not install the unit in humid, dusty, or sooty locations. doing so may cause fire or electric shock.
8. If any unusual smells or smoke come from the unit, stop using the product. in such case, immediately disconnect the power source and contact the service center. continued use in such a condition may cause fire or electric shock.
9. If this product fails to operate normally, contact the nearest service center. never disassemble or modify this product in any way. (samsung is not liable for problems caused by unauthorized modifications or attempted repair.)
10. When cleaning, do not spray water directly onto parts of the product. doing so may cause fire or electric shock.

CAUTION

1. Do not drop objects on the product or apply strong shock to it. Keep away from a location subject to excessive vibrationor magnetic interference.
2. Do not install in a location subject to high temperature (over 50°C), low temperature (below -10°C), or high humidity. Doing so may cause fire or electric shock.
3. If you want to relocate the already installed product, be sure to turn off the power and then move or reinstall it.
4. Remove the power plug from the outlet when then there is a lightning. Neglecting to do so may cause fire or damage to the product.
5. Keep out of direct sunlight and heat radiation sources. It may cause fire.
6. Install it in a place with good ventilation.
7. Avoid aiming the camera directly towards extremely bright objects such as sun, as this may damage the CMOS image sensor.
8. Apparatus shall not be exposed to dripping or splashing and no objects filled with liquids, such as vases, shall be placed on the apparatus.
9. The Mains plug is used as a disconnect device and shall stay readily operable at any time.
10. Do not expose the camera to radioactivity. Radioactivity exposure may damage the CMOS.

Safety information

FCC STATEMENT

This device complies with part 15 of the FCC Rules. Operation is subject to the following two conditions :

1) This device may not cause harmful interference, and
2) This device must accept any interference received including interference that may cause undesired operation.

CAUTION

This equipment has been tested and found to comply with the limits for a Class A digital device, pursuant to part 15 of FCC Rules. These limits are designed to provide reasonable protection against harmful interference when the equipment is operated in a commercial environment.
This equipment generates, uses, and can radiate radio frequency energy and, if not installed and used in accordance with the instruction manual, may cause harmful interference to radio communications. Operation of this equipment in a residential area is likely to cause harmful interference in which case the user will be required to correct the interference at his own expense.

IC Compliance Notice

This Class A digital apparatus meets all requirements of the Canadian Interference.-Causing Equipment Regulations of ICES-003.

Correct Disposal of This Product (Waste Electrical & Electronic Equipment)

(Applicable in the European Union and other European countries with separate collection systems)

This marking on the product, accessories or literature indicates that the product and its electronic accessories (e.g. charger, headset, USB cable) should not be disposed of with other household waste at the end of their working life. To prevent possible harm to the environment or human health from uncontrolled waste disposal, please separate these items from other types of waste and recycle them responsibly to promote the sustainable reuse of material resources.

Household users should contact either the retailer where they purchased this product, or their local government office, for details of where and how they can take these items for environmentally safe recycling.

Business users should contact their supplier and check the terms and conditions of the purchase contract. This product and its electronic accessories should not be mixed with other commercial wastes for disposal.

Correct disposal of batteries in this product

(Applicable in the European Union and other European countries with separate battery return systems.)

This marking on the battery, manual or packaging indicates that the batteries in this product should not be disposed of with other household waste at the end of their working life. Where marked, the chemical symbols Hg, Cd or Pb indicate that the battery contains mercury, cadmium or lead above the reference levels in EC Directive 2006/66. If batteries are not properly disposed of, these substances can cause harm to human health or the environment.

To protect natural resources and to promote material reuse, please separate batteries from other types of waste and recycle them through your local, free battery return system.

Important safety instructions

1. Read these instructions.
2. Keep these instructions.
3. Heed all warnings.
4. Follow all instructions.
5. Do not use this apparatus near water.
6. Clean only with dry cloth.
7. Do not block any ventilation openings. Install in accordance with the manufacturer's instructions.
8. Do not install near any heat sources such as radiators, heat registers, or other apparatus (including amplifiers) that produce heat.
9. Do not defeat the safety purpose of the polarized or grounding-type plug. A polarized plug has two blades with one wider than the other. A grounding type plug has two blades and a third grounding prong. The wide blade or the third prong is provided for your safety. If the provided plug does not fit into your outlet, consult an electrician for replacement of the obsolete outlet.
10. Protect the power cord from being walked on or pinched particularly at plugs, convenience receptacles, and the point where they exit from the apparatus.
11. Only use attachments/accessories specified by the manufacturer.
12. Use only with cart, stand, tripod, bracket, or table specified by the manufacturer, or sold with the apparatus.
13. Unplug this apparatus when a card is used. Use caution when moving the cart/ apparatus combination to avoid injury from tip-over.
14. Refer all servicing to qualified service personnel. Servicing is required when the apparatus has been damaged in any way, such as powersupply cord or plug is damaged, liquid has been spilled or objects have fallen into the apparatus, the apparatus has been exposed to rain or moisture, does not operate normally, or has been dropped.

Apparatus shall not be exposed to dripping or splashing and no objects filled with liquids, such as vases, shall be placed on the apparatus

Samsung Techwin cares for the environment at all product manufacturing stages to preserve the environment, and is taking a number of steps to provide customers with more environment-friendly products.The Eco mark represents Samsung Techwin's will to create environment-friendly products, and indicates that the product satisfies the EU RoHS Directive.

Contents

INTRODUCTION 9

9 Package contents
10 Part names and functions

INSTALLATION 11

11 Installing the camera

CONNECTION 12

12 Connecting to Monitor
12 Connecting to Power

TROUBLESHOOTING 14

14 Troubleshooting

SPECIFICATIONS 15

15 Specifications
17 Dimension

PACKAGE CONTENTS

Camera	Screw	Wall anchor
Wrench	Quick Manual	

- The quantity of Camera, Wrench, Cable, Screw and Wall anchor varies depending on the model.

PART NAMES AND FUNCTIONS

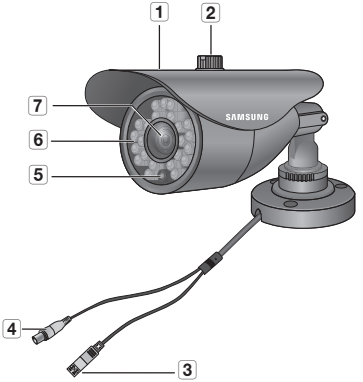

Name		Description
1	Camera Sunshield	
2	Sunshield Adaptor	Fixing the sunshield onto the camera.
3	Power Cable	Used to plug the power cable.
4	BNC Cable	BNC terminal for video signal output.
5	Illumination Sensor	Detects incoming light to control the IR LED.
6	IR LED	These infrared LED's are controlled by the illumination sensor.
7	Lens	Focal length of 6mm or 8mm enables you to cover relatively longer range of monitoring. SCO-2030R-f = 6mm, SCO-2040R-f = 8mm

Installing the camera

The camera can be installed on the wall, ceiling, shelf or a desired position using the provided bracket.

1. Select a position where you want to install the camera.
   - Make sure the selected position can sustain the weight of the camera.
2. Use the screw bolts to mount the camera bracket onto the wall or ceiling.

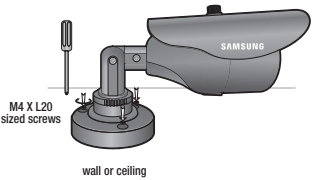

3. Adjust the camera to target the video location by tightening camera bracket's screw and lock ring on the camera bracket

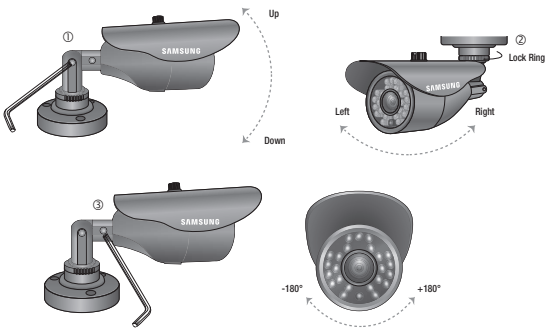

4. Connect the camera cable to the camera.

Connection

CONNECTING TO MONITOR

Please connect the Video output jack located on the back of the camera to the monitor.

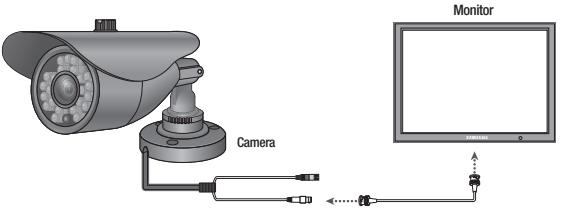

- The connection method varies depending on the type of monitor and accessories. Please refer to the user's manual for each instrument.
- Please turn off the power when connecting.

CONNECTING TO POWER

Connect the adapter to the power input connector as shown in the figure below. Use a DC 12V.
Please check the standard power requirement before connecting the power.
(The adapter is not provided with the camera.)

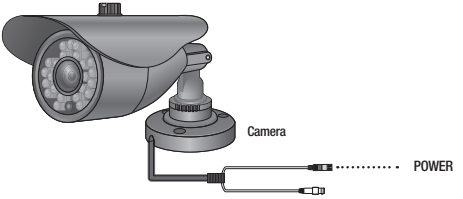

When the resistance value of copper wire is at [20°C(68°F)]

Copper wire size (AWG)	#28 (0.08mm^2)	#26 (0.13mm^2)	#24 (0.22mm^2)	#22 (0.33mm^2)	#20 (0.52mm^2)	#18 (0.83mm^2)
Resistance (Ω/m)	0.213	0.134	0.078	0.050	0.030	0.018
Voltage Drop (V/m)	0.077	0.048	0.028	0.018	0.011	0.006

- As shown in the table above, voltage decreases as the wire gets longer. Therefore, the use of an excessively long power cable to the camera may affect the camera's performance.
  - ∗ Standard voltage for camera operation : DC 12V±10%.
  - ∗ There may be some deviation in voltage drop depending on the type of wire and the manufacturer.

- Please use a power adaptor that meets the required standards.
- Please connect the power after installation.
- Please use the input power with just one camera and other devices must not be connected.

TROUBLESHOOTING

If you have trouble operating your camera, refer to the following table. If the guidelines do not enable you to solve the problem, contact an authorized technician.

PROBLEM	SOLUTION
The image on the screen is dim.	▶ Check if the lens are stained. If dirty, clean the lens with soft, clean cloth. ▶ The image is dimmer at night than daytime. If the focus is not right, adjust it at daytime.
The contrast on the screen is too weak.	▶ Adjust the contrast feature of the monitor. ▶ If the camera is exposed under too strong light, change the camera position.
The camera is not work properly, and the surface of the camera case is hot.	▶ Check that you have connected the camera to a proper power (DC 12V±10%).

SPECIFICATIONS

	SCO-2040RN	SCO-2030RP	SCO-2040RP
Video			
Imaging Device	1/3" CMOS		
Active Pixels	976(H) x 496(V)		
Scanning System	Interlace		
Synchronization	Internal		
Frequency	H: 15,734 Hz	H: 15,625 Hz	
	V: 59.94 Hz	V: 50 Hz	
Horizontal Resolution	650TVL		
Min. Illumination	0Lux (IR-LED)		
S/N Ratio	50dB		
Lens Type			
Focal Length (Zoom Ratio)	8mm	6mm	8mm
Max. Aperture Ratio	2		
Operational			
Shutter Mode	Auto(Rolling Shutter)		
Gain Control	Auto		
White Balance	Auto (3200°K ~ 6500°K)		
Digital Noise Reduction	Auto		
Day & Night	MECHA IR CUT FILTER		
IR Distance	25m		
Environmental			
Operating Temperature / Humidity	-10°C ~ +50°C (+14°F ~ +122°F) / 20%~85% RH		
IP Grade	IP66		

SPECIFICATIONS

	SCO-2040RN	SCO-2030RP	SCO-2040RP
Electrical			
Input Voltage	DC 12V		
Power Consumption	Max. 3W		
Mechanical			
Dimension	W 69 x H 63 x L 182.5 mm		
Weight	245g		

※ This specification can be changed without notice for performance improvement of product.

DIMENSION

Unit : mm

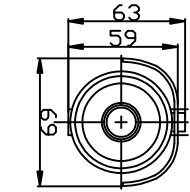

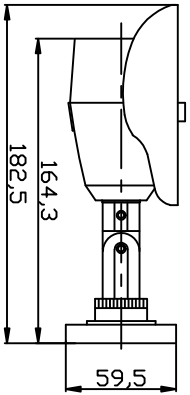

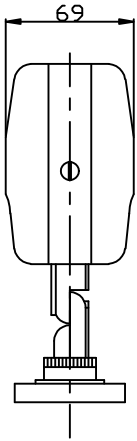

SALES NETWORK

SAMSUNG TECHWIN CO., LTD.
Samsung Techwin R&D Center, 6, Pangyo-ro 319beon-gil, Bundang-gu, Songnam-si, Gyeonggi-do 463-400, Korea
TEL : +82-70-7147-8740~60, FAX : +82-31-8018-3745

SAMSUNG TECHWIN AMERICA Inc.
100 Challenger Rd. Suite 700 Ridgefield Park, NJ 07660
Toll Free : +1-877-213-1222 Direct : +1-201-325-6920
Fax : +1-201-373-0124
www.samsungcctvusa.com

SAMSUNG TECHWIN EUROPE LTD.
Samsung House, 1000 Hillswood Drive, Hillswood Business Park
Chertsey, Surrey, UNITED KINGDOM KT16 OPS
TEL : +44-1932-45-5300, FAX : +44-1932-45-5325

www.samsungtechwin.com
www.samsungsecurity.com

P/NO. : PT01-001994A