

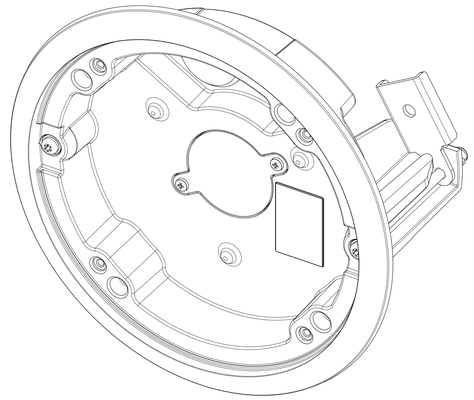

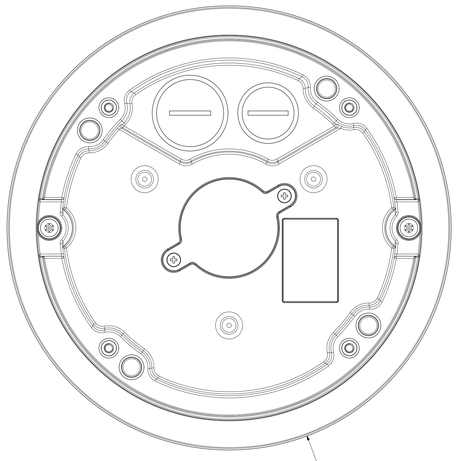

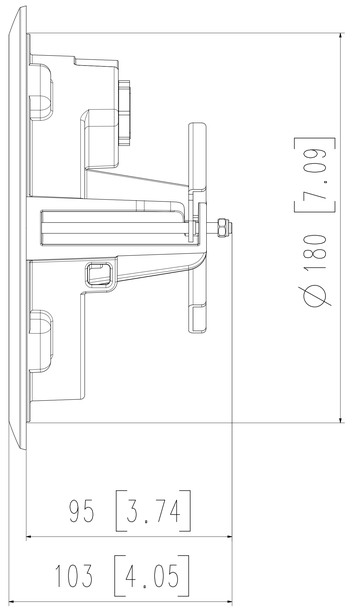

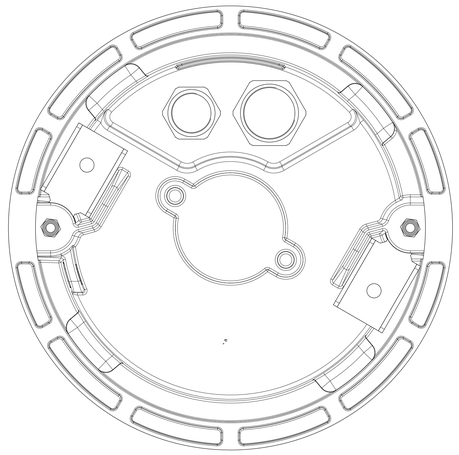

3		
2		
1	SHD-1370FPW	23.06.28
No.	MODEL NAME	DATE
Unit:mm[inch]	SCALE:1/1	Hanwha Vision

© Hanwha Vision Co.,Ltd. All rights reserved.

A0