Thank you for giving UL the opportunity to partner with you.
Please note, Follow-Up Procedure Revisions or Report Revisions do not include Authorization Pages, Indices, Section General, and/or Appendices unless revisions were required or requested.

Should you have any questions, after reviewing the material, or need to report any inaccuracies, please reach out to your UL representative or find UL contact details for your local Customer Service Department at https://www.ul.com/about/locations.

Please find attached the related material on Project

For your convenience, the below describes the related updates:

E158873-A6262-DescriptionUL
Figure-8-Total
E158873-A6262-DescriptionUL
Figure-8-Total

This material is provided on behalf of UL LLC (UL) or any authorized licensee of UL.

Times change, Trust Remains™

UL TEST REPORT AND PROCEDURE

Standard:	UL 62368-1, 3rd Ed, 2021-10-22 (Audio/video, information and communication technology equipment Part 1: Safety requirements) CAN/CSA C22.2 No. 62368-1:19, 3rd Ed, 2021-10-22 (Audio/video, information and communication technology equipment Part 1: Safety requirements)
Certification Type:	Listing
CCN:	AZOT, AZOT7 (Audio/video, Information and Communication Technology Equipment)
Complementary CCN:	N/A
Product:	LENS MODULE
Model:	SLA-F1080FA, SLA-F2480WA
Rating:	5 Vdc, 0.25 A
Applicant Name and Address:	HANWHA VISION CO LTD 6, PANGYO-RO 319BEON-GIL, BUNDANG-GU SEONGNAM-SI GYEONGGI-DO 13488 KOREA

This is to certify that representative samples of the products covered by this Test Report have been investigated in accordance with the above referenced Standards. The products have been found to comply with the requirements covering the category and the products are judged to be eligible for Follow-Up Service under the indicated Test Procedure. The manufacturer is authorized to use the UL Mark on such products which comply with this Test Report and any other applicable requirements of UL LLC ('UL') in accordance with the Follow-Up Service Agreement. Only those products which properly bear the UL Mark are considered as being covered by UL's Follow-Up Service under the indicated Test Procedure.

The applicant is authorized to reproduce the referenced Test Report provided it is reproduced in its entirety.

UL authorizes the applicant to reproduce the latest pages of the referenced Test Report consisting of the first page of the Specific Technical Criteria through to the end of the Conditions of Acceptability.

Any information and documentation involving UL Mark services are provided on behalf of UL LLC (UL) or any authorized licensee of UL.

Prepared By: Sohyun Lee / Project Handler Reviewed By: Seungtae Kim / Reviewer

Copyright © 2019

Supporting Documentation

The following documents located at the beginning of this Procedure supplement the requirements of this Test Report:

A. Authorization - The Authorization page may include additional Factory Identification Code markings.

B. Generic Inspection Instructions -

i. Part AC details important information which may be applicable to products covered by this Procedure. Products described in this Test Report must comply with any applicable items listed unless otherwise stated in the body of this Test Report.

ii. Part AE details any requirements which may be applicable to all products covered by this Procedure. Products described in this Test Report must comply with any applicable items listed unless otherwise stated in the body of each Test Report.

iii. Part AF details the requirements for the UL Certification Mark which is not controlled by the technical standard used to investigate these products. Products are permitted to bear only the Certification Mark(s) corresponding to the countries for which it is certified, as indicated in each Test Report.

Product Description

LENS MODULE consists of lens and cable part and supplied by 5 Vdc. (Indoor or outdoor used)

Model Differences

SLA-F1080FA is a basic model.

SLA-F2480WA is identical with basic model except for fixed lens and manufacturer's specified temperature.

Test Item Particulars

Product group ..... :	built-in component
Classification of use by ..... :	Ordinary person
Supply Connection ..... :	not mains connected: ES1
Supply tolerance ..... :	None
Supply connection – type ..... :	Not directly connected to the mains
Considered current rating of protective device .... :	N/A
Equipment mobility ..... :	movable
Over voltage category (OVC) ..... :	OVC I
Class of equipment ..... :	Class III
Special installation location ..... :	N/A
Pollution degree (PD) ..... :	PD 2
Manufacturer's specified Tma (°C) ..... :	55 Outdoor: minimum -10 (For model, SLA-F1080FA) and -30 (For model, SLA-F2480WA)
IP protection class ..... :	IP 66
Power systems ..... :	not AC mains
Altitude during operation (m) ..... :	2000 m or less
Altitude of test laboratory (m) ..... :	2000 m or less
Mass of equipment (kg) ..... :	0.11

Technical Considerations

☐ The product was submitted and evaluated for use at the maximum ambient temperature (Tma) permitted by the manufacturer's specification of : 55 °C

- The product is intended for use on the following power systems : No direct connection
- Considered current rating of protective device as part of the building installation (A) : N/A
- Mains supply tolerance (%) or absolute mains supply : No direct connection
- The following are available from the Applicant upon request : Installation (Safety) Instructions / Manual
- The outdoor equipment/enclosure was evaluated for use in an ambient range of : -10 °C to 55 °C (For model, SLA-F1080FA) and -30 °C to 55 °C (For model, SLA-F2480WA)

Additional Information

4791833036
- Maximum Normal Load: Continuous operation (Operate the camera through networked equipment.)

4791948637
- Add a model, SLA-F2480WA.
- Add a photograph of SLA-F2480WA.
- Add manufacturer's specified temperature: -30 °C to 55 °C (For model, SLA-F2480WA).

Additional Standards

The product fulfills the requirements of: N/A

Markings and Instructions

Clause Title	Marking or Instruction Details
Equipment identification marking – Manufacturer identification	Recognized Company’s name, Trade Name, Trademark or File Number
Equipment identification marking – model identification	Model Number
Equipment rating marking – ratings	Input Ratings (voltage, current)
Outdoor enclosure type	"Rainproof", IP66
Hard Copy	A. IMPORTANT or ATTENTION or similar wording B. Please check 'Manuals' from out website, before connecting to the supply. C. Company website URL (https://www.~~) or QR code.
Manual	This product is intended to be supplied by a UL Listed Power Supply Unit marked “Class 2” or “LPS” or “PS2” and rated from 5 Vdc, 0.25 A.
SCC requirement	If the signal words DANGER, WARNING, and CAUTION are included, a French manual is provided.

Special Instructions to UL Representative

N/A

BD1.0	**TABLE: Production-Line Testing Requirements**					
BD1.1	**Electric Strength Test Special Constructions – Refer to Generic Inspection Instructions, Part AC for further information.**					
Model	Component	Removable parts	Test probe location	Test V rms	Test V dc	Test Time, s
N/A	N/A	N/A	N/A	N/A	N/A	N/A
BD1.2	**Earthing Continuity Test Exemptions – This test is not required for the following models:**					
	All models					
BD1.3	**Electric Strength Test Exemptions – This test is not required for the following models:**					
	All models					
BD1.4	**Electric Strength Test Component Exemptions – The following solid-state components may be disconnected from the remainder of the circuitry during the performance of this test.**					
	All models					

BE1.0	**Sample and Test Specifics for Follow-Up Tests at UL**				
Model	Component	Material	Test	Sample (s)	Test Specifics
N/A	N/A	N/A	N/A	N/A	N/A

4.1.2	**TABLE: List of critical components**					**Pass**
Object / part No.	Manufacturer/ trademark	Type / model	Technical data	Product Category CCN(s)	Mark(s) of conformity	Supplement ID
Enclosure (Metal)	Interchangeable	Interchangeable	Aluminum, Min. 1.4 mm thickness, See enclosure for dimension.	-	Tested in equipment	
Gasket	NAMYANG VINA	C-VMQ-50-BK	Gasket Test was conducted under E158873-A6034	-	Tested in equipment	
PWB	HANNSTAR BOARD CORP	MV-4	Min. V-0, 130 deg. C	ZPMV2	UL (E89382)	
PWB - Alternate	Interchangeable	Interchangeable	Min. V-0, 130 deg. C	ZPMV2	UL	
Outdoor Label	Interchangeable	Interchangeable	Suitable for use on each type of surface to which applied, rated for maximum and minimum surface temperature specified, or Min. - 10 deg. C to Max. 55 deg. C (For model, SLA-F1080FA) and Min. - 30 deg. C to Max. 55 deg. C (For model, SLA-F2480WA) if not specified.	PGDQ2 or PGJI2	UL	

Enclosures

Type	Supplement Id	Description
Photographs	03-01	External View
Photographs	03-02	Internal View (Model, SLA-F1080FA)
Photographs	03-03	Interface Board - Top
Photographs	03-04	Interface Board - Bottom
Photographs	03-05	Internal View (Model, SLA-F2480WA)
Manuals	06-01	Manual
Miscellaneous	07-01	Enclosure Drawing
Miscellaneous	07-02	Label

The following Page(s) are related to Manuals-01. The next supplement, if applicable, will be identified with a new Supplement Page Heading.

Important
Please check 'Manuals' from our website, before connecting to the Supply,
https://www.hanwhavision.com/en/download-data/

Warranty
Please check "Product warranty information" from our website.
https://www.hanwhavision.com/en/support/warranty/

We recommend to use the officially compatible VMS version or latest Hanwha NVR version when integrating with VMS or Hanwha NVR.

eco
RoHS compliant

Hanwha Vision cares for the environment at all product manufacturing stages, and is taking measures to provide customers with more environmentally friendly products.
The Eco mark represents Hanwha Vision's devotion to creating environmentally friendly products, and indicates that the product satisfies the EU RoHS Directive.

Correct Disposal of This Product (Waste Electrical & Electronic Equipment)

(Applicable in the European Union and other European countries with separate collection systems)

This marking on the product, accessories or literature indicates that the product and its electronic accessories (e.g. charger, headset, USB cable) should not be disposed of with other household waste at the end of their working life. To prevent possible harm to the environment or human health from uncontrolled waste disposal, please separate these items from other types of waste and recycle them responsibly to promote the sustainable reuse of material resources.

Household users should contact either the retailer where they purchased this product, or their local government office, for details of where and how they can take these items for environmentally safe recycling.

Business users should contact their supplier and check the terms and conditions of the purchase contract. This product and its electronic accessories should not be mixed with other commercial wastes for disposal.

Correct disposal of batteries in this product

(Applicable in the European Union and other European countries with separate battery return systems.)

This marking on the battery, manual or packaging indicates that the batteries in this product should not be disposed of with other household waste at the end of their working life. Where marked, the chemical symbols Hg, Cd or Pb indicate that the battery contains mercury, cadmium or lead above the reference levels in EC Directive 2006/66. If batteries are not properly disposed of, these substances can cause harm to human health or the environment.

To protect natural resources and to promote material reuse, please separate batteries from other types of waste and recycle them through your local, free battery return system.

1. Read these instructions.
2. Keep these instructions.
3. Heed all warnings.
4. Follow all instructions.
5. Do not use this apparatus near water.
6. Clean the contaminated area on the product surface with a soft, dry cloth or a damp cloth.
   (Do not use a detergent or cosmetic products that contain alcohol, solvents or surfactants or oil constituents as they may deform or cause damage to the product.)
7. Do not block any ventilation openings, Install in accordance with the manufacturer's instructions.
8. Do not install near any heat sources such as radiators, heat registers, stoves, or other apparatus (including amplifiers) that produce heat.
9. Do not defeat the safety purpose of the polarized or grounding-type plug. A polarized plug has two blades with one wider than the other. A grounding type plug has two blades and a third grounding prong. The wide blade or the third prong are provided for your safety. If the provided plug does not fit into your outlet, consult an electrician for replacement of the obsolete outlet.
10. Protect the power cord from being walked on or pinched particularly at plugs, convenience receptacles, and the point where they exit from the apparatus.
11. Only use attachments/ accessories specified by the manufacturer.
12. Use only with the cart, stand, tripod, bracket, or table specified by the manufacturer, or sold with the apparatus. When a cart is used, use caution when moving the cart/apparatus combination to avoid injury from tip-over.

13. Unplug this apparatus during lighting storms or when unused for long periods of time.

14. Refer all servicing to qualified service personnel. Servicing is required when the apparatus has been damaged in any way, such as power-supply cord or plug is damaged, liquid has been spilled or objects have fallen into the apparatus, the apparatus has been exposed to rain or moisture, does not operate normally, or has been dropped.

15. This product is intended to be supplied by a UL Listed Power Supply Unit marked “Class 2” or “LPS” or “PS2” and rated from 5 Vdc, 0.25 A.

Any changes or modifications in construction of this device which are not expressly approved by the party responsible for compliance could void the user's authority to operate the equipment.

This device complies with part 15 of the FCC Rules. Operation is subject to the following two conditions: (1) This device may not cause harmful interference, and (2) this device must accept any interference received, including interference that may cause undesired operation.

This equipment has been tested and found to comply with the limits for a Class A digital device, pursuant to part 15 of the FCC Rules. These limits are designed to provide reasonable protection against harmful interference when the equipment is operated in a commercial environment. This equipment generates, uses, and can radiate radio frequency energy and, if not installed and used in accordance with the instruction manual, may cause harmful interference to radio communications. Operation of this equipment in a residential area is likely to cause harmful interference in which case the user will be required to correct the interference at his own expense.

- Reorient or relocate the receiving antenna.
- Increase the separation between the equipment and receiver.
- Connect the equipment into an outlet on a circuit different from that to which the receiver is connected.
- Consult the dealer or an experienced radio/TV technician for help.

- SLA-T2480VA

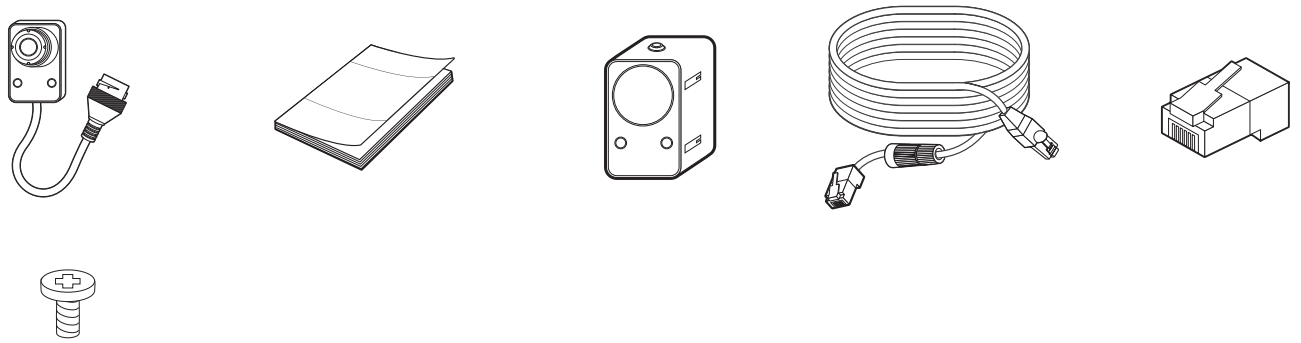

- SLA-T4680VA

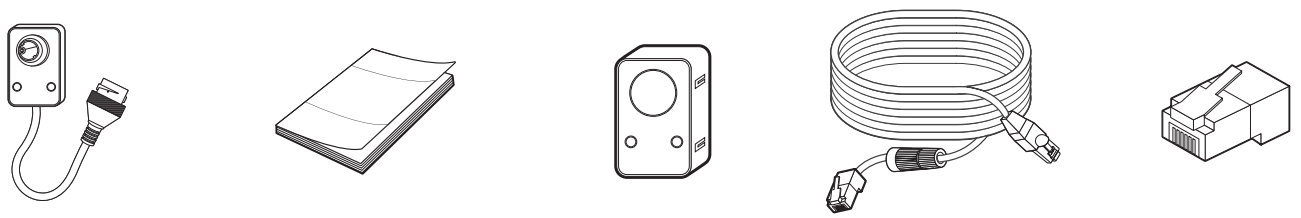

- SLA-F1080FA

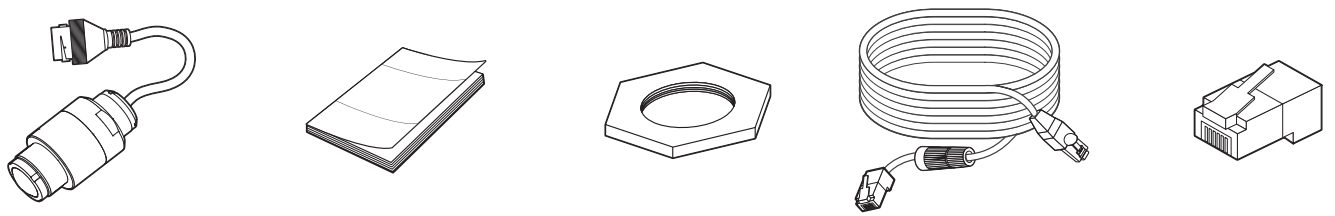

- SLA-F2480A

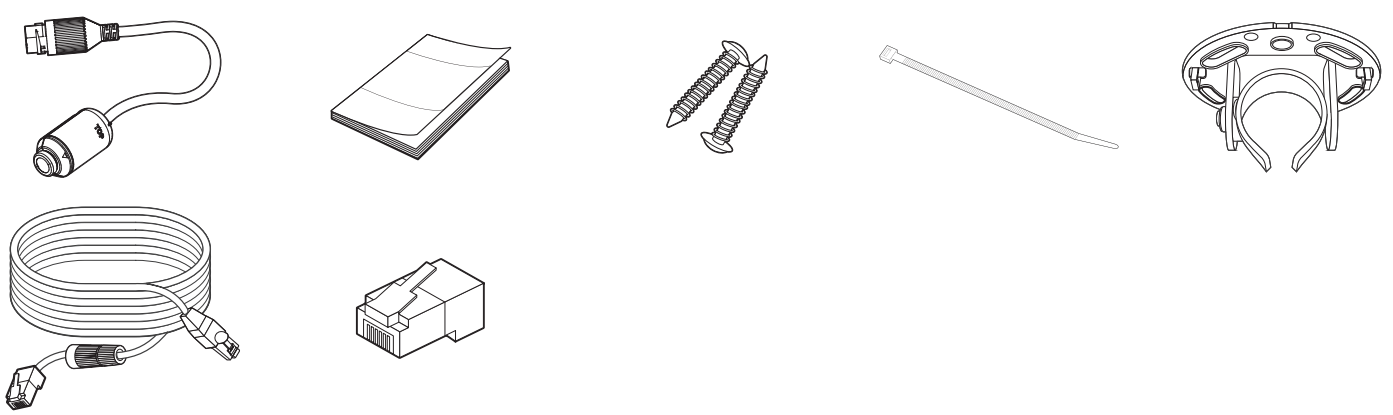

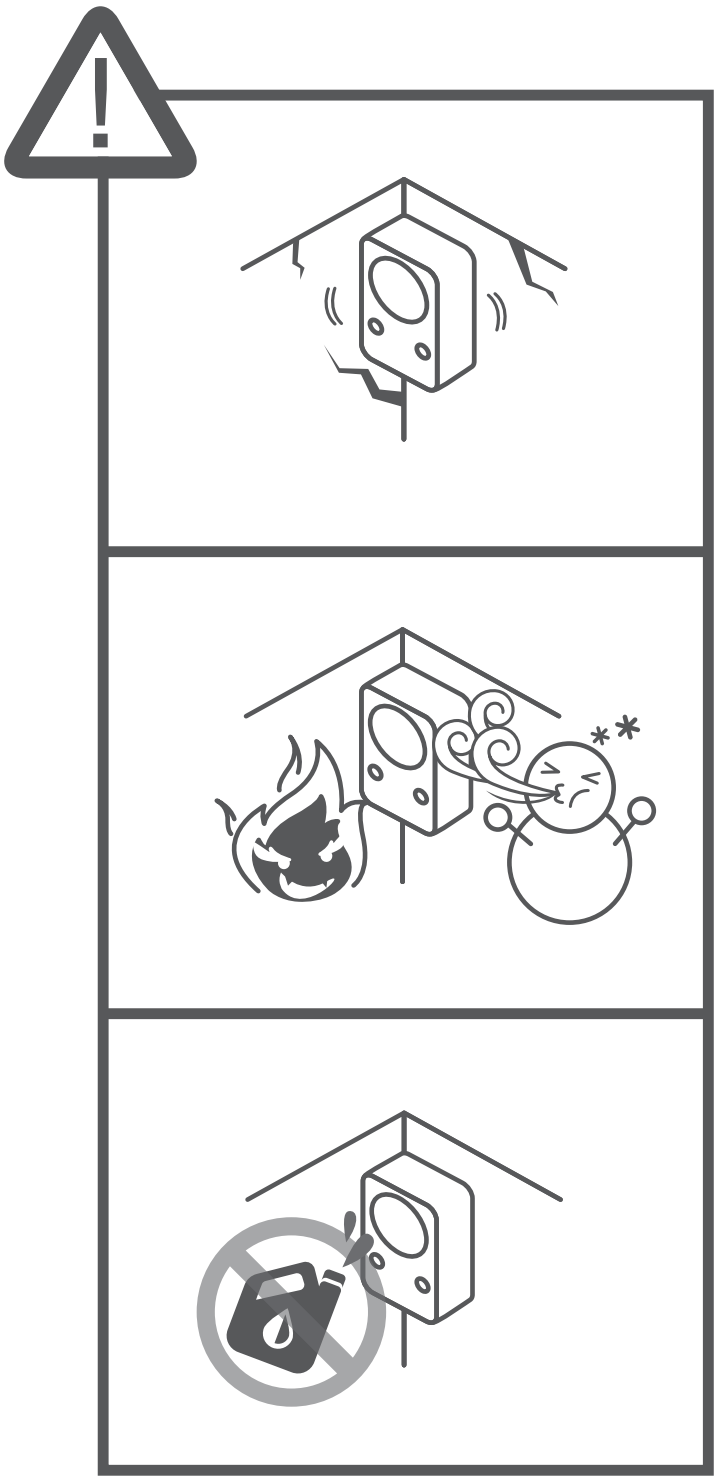

INSTALLATION

1-1

- SLA-T1080FA/SLA-F1080FA

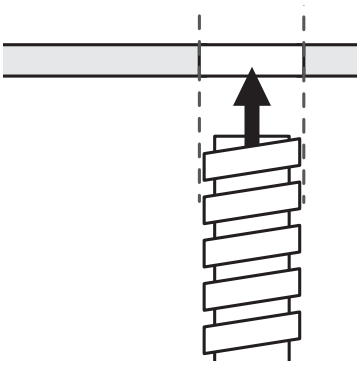

1-2

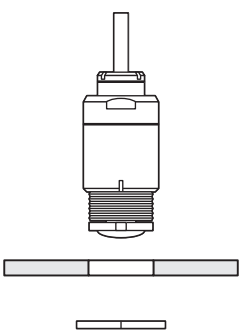

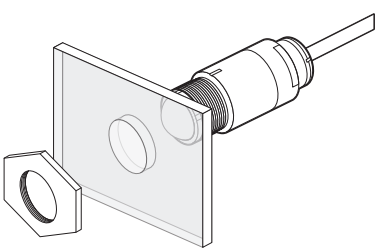

1-3

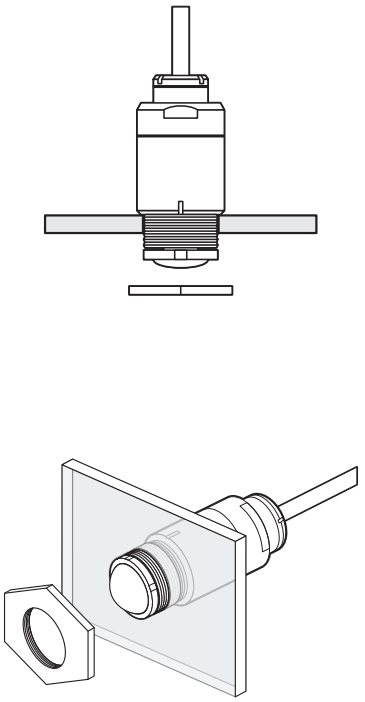

1-4

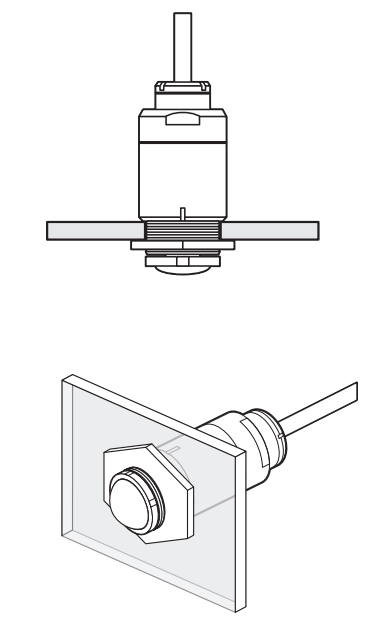

1-5

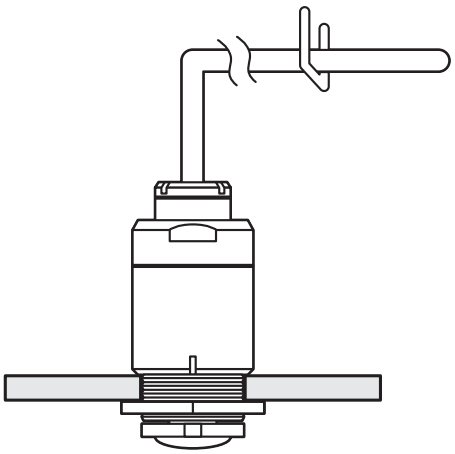

The following Page(s) are related to Manuals-01. The next supplement, if applicable, will be identified with a new Supplement Page Heading.

Important
Please check 'Manuals' from our website, before connecting to the Supply,
https://www.hanwhavision.com/en/download-data/

Warranty
Please check "Product warranty information" from our website.
https://www.hanwhavision.com/en/support/warranty/

We recommend to use the officially compatible VMS version or latest Hanwha NVR version when integrating with VMS or Hanwha NVR.

eco
RoHS compliant

Hanwha Vision cares for the environment at all product manufacturing stages, and is taking measures to provide customers with more environmentally friendly products.
The Eco mark represents Hanwha Vision's devotion to creating environmentally friendly products, and indicates that the product satisfies the EU RoHS Directive.

Correct Disposal of This Product (Waste Electrical & Electronic Equipment)

(Applicable in the European Union and other European countries with separate collection systems)

This marking on the product, accessories or literature indicates that the product and its electronic accessories (e.g. charger, headset, USB cable) should not be disposed of with other household waste at the end of their working life. To prevent possible harm to the environment or human health from uncontrolled waste disposal, please separate these items from other types of waste and recycle them responsibly to promote the sustainable reuse of material resources.

Household users should contact either the retailer where they purchased this product, or their local government office, for details of where and how they can take these items for environmentally safe recycling.

Business users should contact their supplier and check the terms and conditions of the purchase contract. This product and its electronic accessories should not be mixed with other commercial wastes for disposal.

Correct disposal of batteries in this product

(Applicable in the European Union and other European countries with separate battery return systems.)

This marking on the battery, manual or packaging indicates that the batteries in this product should not be disposed of with other household waste at the end of their working life. Where marked, the chemical symbols Hg, Cd or Pb indicate that the battery contains mercury, cadmium or lead above the reference levels in EC Directive 2006/66. If batteries are not properly disposed of, these substances can cause harm to human health or the environment.

To protect natural resources and to promote material reuse, please separate batteries from other types of waste and recycle them through your local, free battery return system.

1. Read these instructions.
2. Keep these instructions.
3. Heed all warnings.
4. Follow all instructions.
5. Do not use this apparatus near water.
6. Clean the contaminated area on the product surface with a soft, dry cloth or a damp cloth.
   (Do not use a detergent or cosmetic products that contain alcohol, solvents or surfactants or oil constituents as they may deform or cause damage to the product.)
7. Do not block any ventilation openings, Install in accordance with the manufacturer's instructions.
8. Do not install near any heat sources such as radiators, heat registers, stoves, or other apparatus (including amplifiers) that produce heat.
9. Do not defeat the safety purpose of the polarized or grounding-type plug. A polarized plug has two blades with one wider than the other. A grounding type plug has two blades and a third grounding prong. The wide blade or the third prong are provided for your safety. If the provided plug does not fit into your outlet, consult an electrician for replacement of the obsolete outlet.
10. Protect the power cord from being walked on or pinched particularly at plugs, convenience receptacles, and the point where they exit from the apparatus.
11. Only use attachments/ accessories specified by the manufacturer.
12. Use only with the cart, stand, tripod, bracket, or table specified by the manufacturer, or sold with the apparatus. When a cart is used, use caution when moving the cart/apparatus combination to avoid injury from tip-over.

13. Unplug this apparatus during lighting storms or when unused for long periods of time.

14. Refer all servicing to qualified service personnel. Servicing is required when the apparatus has been damaged in any way, such as power-supply cord or plug is damaged, liquid has been spilled or objects have fallen into the apparatus, the apparatus has been exposed to rain or moisture, does not operate normally, or has been dropped.

15. This product is intended to be supplied by a UL Listed Power Supply Unit marked “Class 2” or “LPS” or “PS2” and rated from 5 Vdc, 0.25 A.

Any changes or modifications in construction of this device which are not expressly approved by the party responsible for compliance could void the user's authority to operate the equipment.

This device complies with part 15 of the FCC Rules. Operation is subject to the following two conditions: (1) This device may not cause harmful interference, and (2) this device must accept any interference received, including interference that may cause undesired operation.

This equipment has been tested and found to comply with the limits for a Class A digital device, pursuant to part 15 of the FCC Rules. These limits are designed to provide reasonable protection against harmful interference when the equipment is operated in a commercial environment. This equipment generates, uses, and can radiate radio frequency energy and, if not installed and used in accordance with the instruction manual, may cause harmful interference to radio communications. Operation of this equipment in a residential area is likely to cause harmful interference in which case the user will be required to correct the interference at his own expense.

- Reorient or relocate the receiving antenna.
- Increase the separation between the equipment and receiver.
- Connect the equipment into an outlet on a circuit different from that to which the receiver is connected.
- Consult the dealer or an experienced radio/TV technician for help.

- SLA-T2480VA

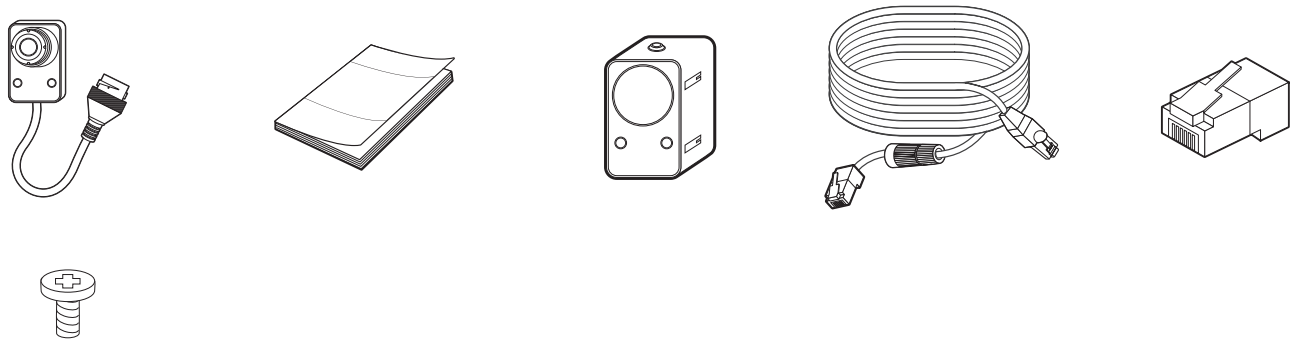

- SLA-T4680VA

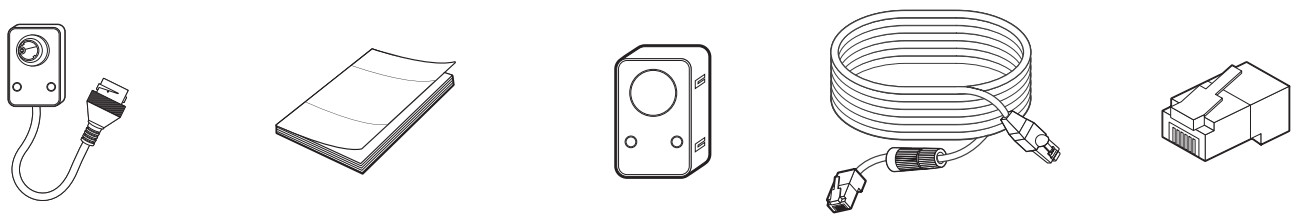

- SLA-F1080FA

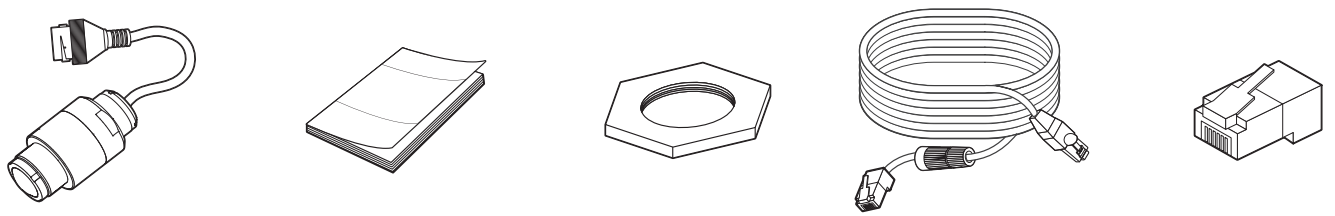

- SLA-F2480A

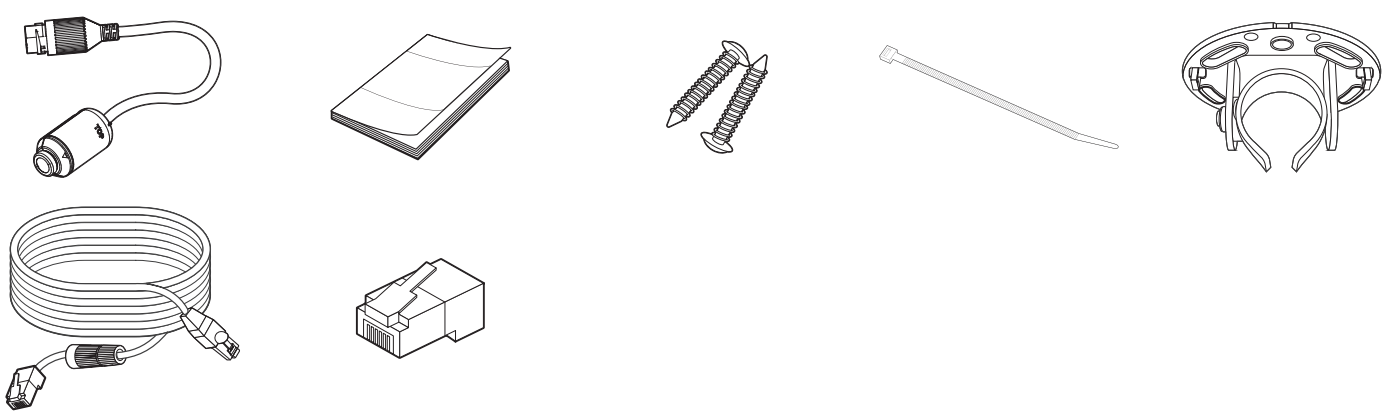

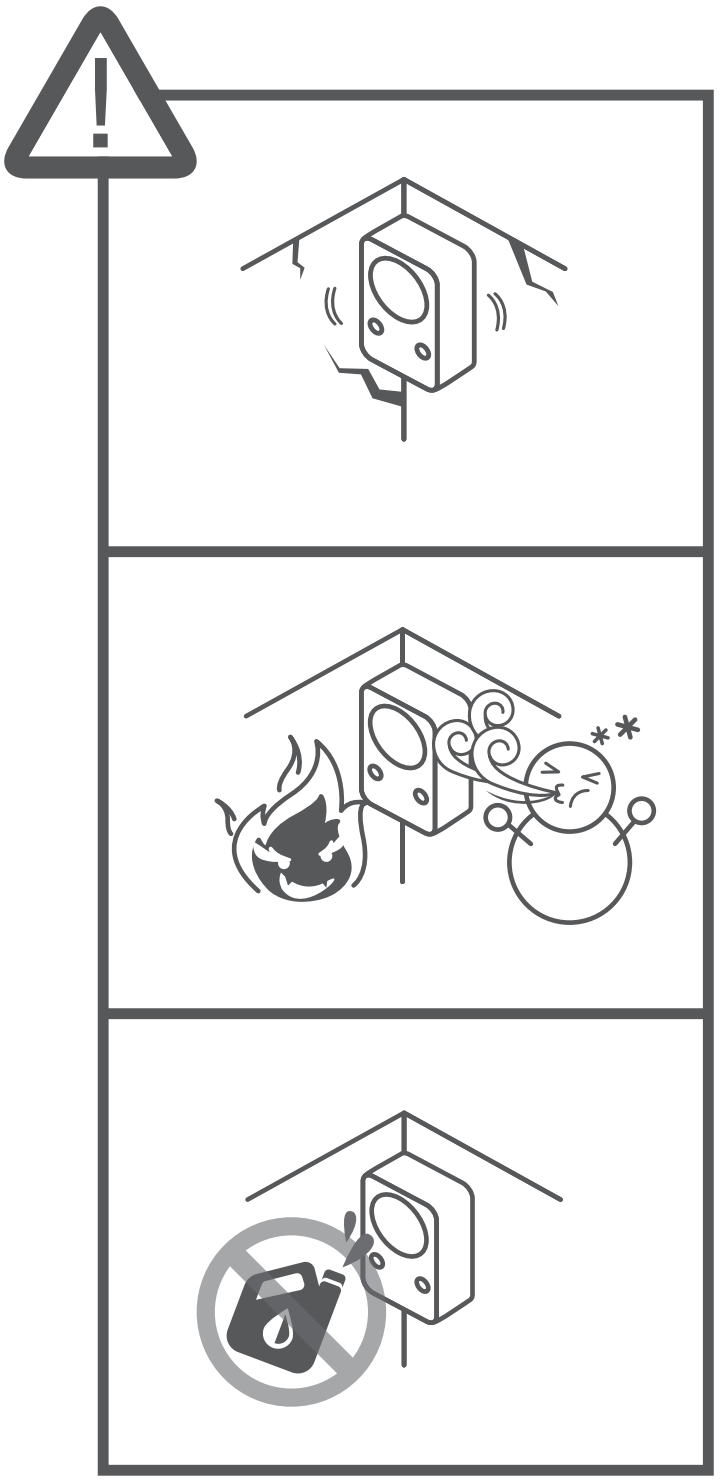

INSTALLATION

1-1

- SLA-T1080FA/SLA-F1080FA

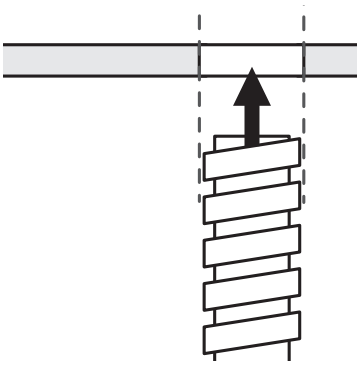

1-2

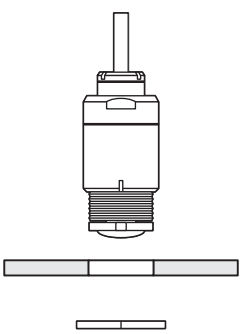

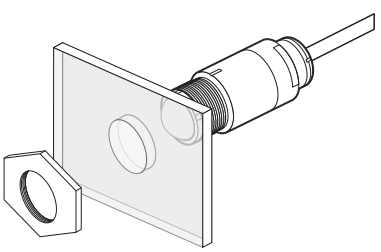

1-3

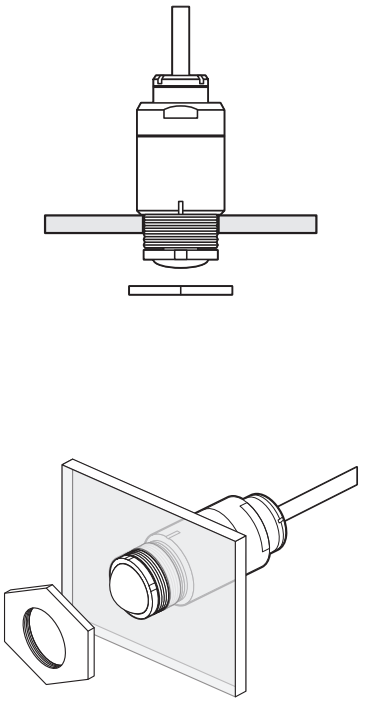

1-4

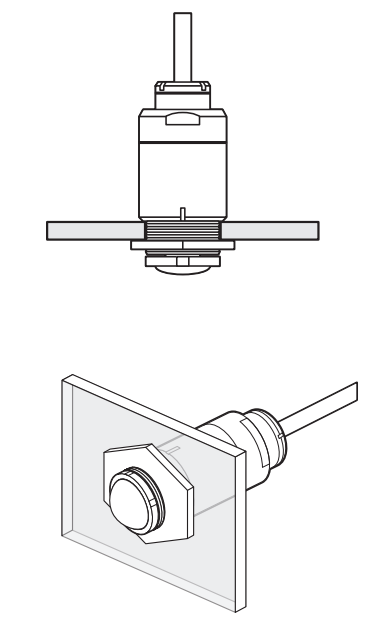

1-5

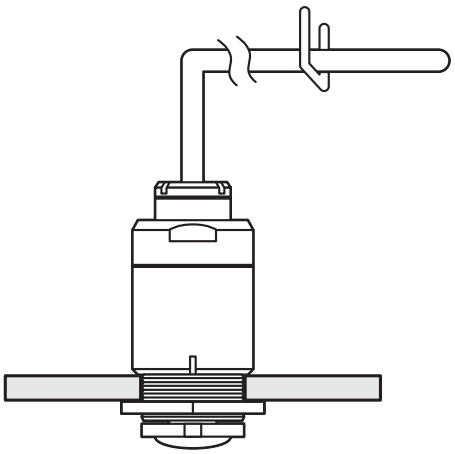

The following Page(s) are related to Miscellaneous-01. The next supplement, if applicable, will be identified with a new Supplement Page Heading.

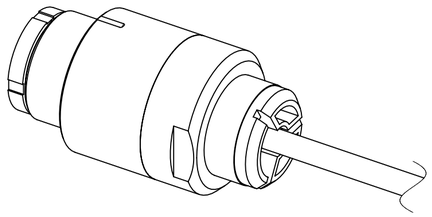

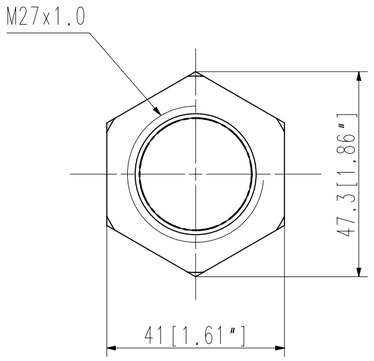

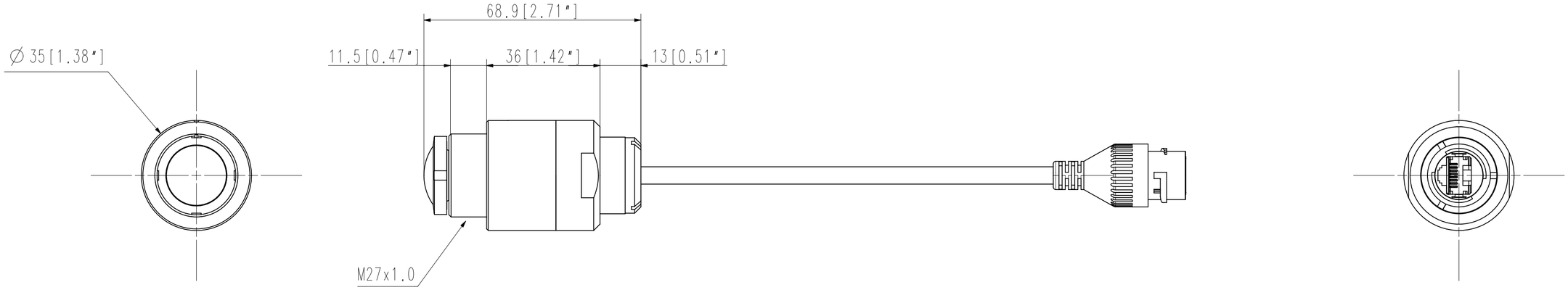

3	SLA-F1080FA	'25.06.13
2	SLA-T1080FA	'21.04.08
1	SLA-T1080F	'17.09.13
No.	MODEL NAME	DATE

Unit:mm[inch] SCALE:1/1 Hanwha Techwin

A2

© Hanwha Techwin Co.,Ltd. All rights reserved.

The following Page(s) are related to Miscellaneous-01. The next supplement, if applicable, will be identified with a new Supplement Page Heading.

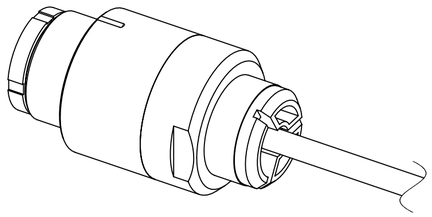

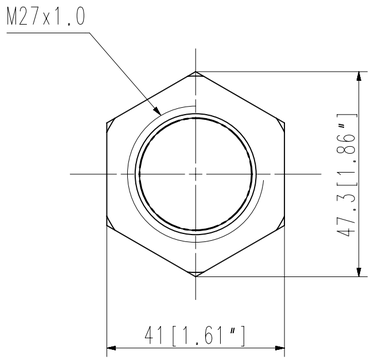

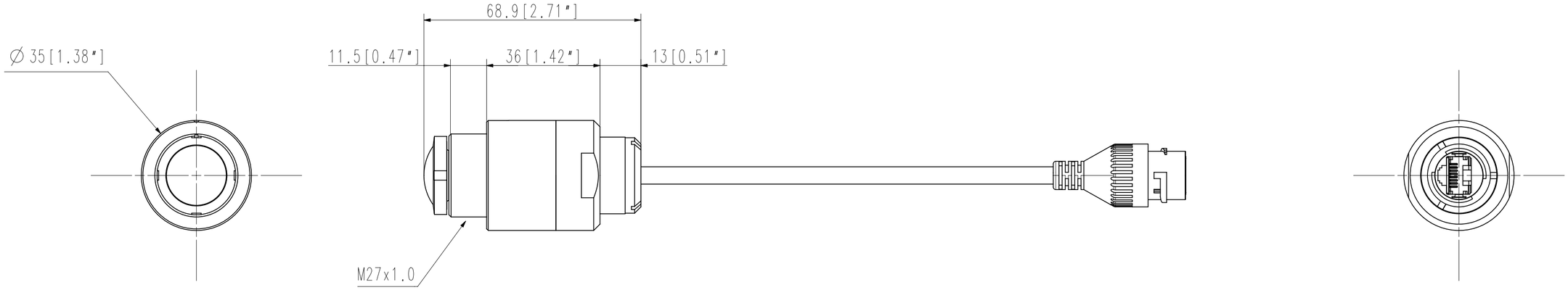

3	SLA-F1080FA	'25.06.13
2	SLA-T1080FA	'21.04.08
1	SLA-T1080F	'17.09.13
No.	MODEL NAME	DATE

Unit:mm[inch] SCALE:1/1 Hanwha Techwin

A2

© Hanwha Techwin Co.,Ltd. All rights reserved.

LENS MODULE

MODEL : SLA-F1080FA

DC 5V ⎓ 0.25A

M/C: SLA-F1080FA/VEX Fac. ID : V

2025.05 S/N: ZWMW70GY50000WR

R-R-HWVS-SLAF1080FA

Rainproof / Étanche IP66

CAN ICES-3(A)/NMB-3(A)

HANWHA VISION CO.,LTD. MADE IN VIETNAM

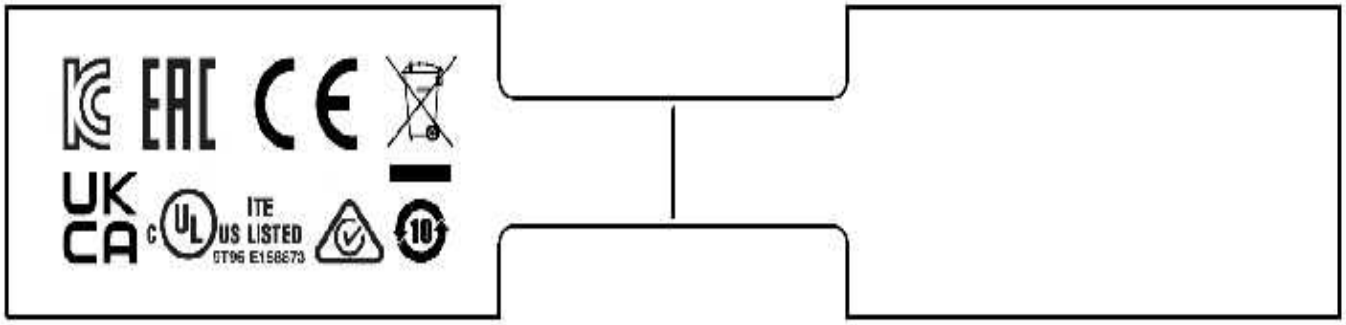

LENS MODULE

MODEL : SLA-F1080FA

DC 5V ⎓ 0.25A

M/C: SLA-F1080FA/VEX Fac. ID : V

2025.05 S/N: ZWMW70GY50000WR

R-R-HWVS-SLAF1080FA

Rainproof / Étanche IP66

CAN ICES-3(A)/NMB-3(A)

HANWHA VISION CO.,LTD. MADE IN VIETNAM

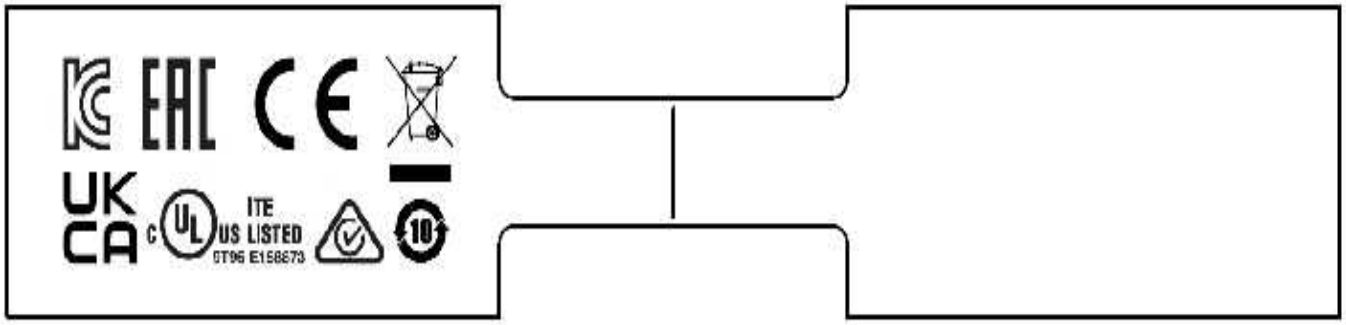

Photographs-01 Page-1

Photographs-01 Page-2

Photographs-02 Page-1

Photographs-02 Page-2

Photographs-03 Page-1

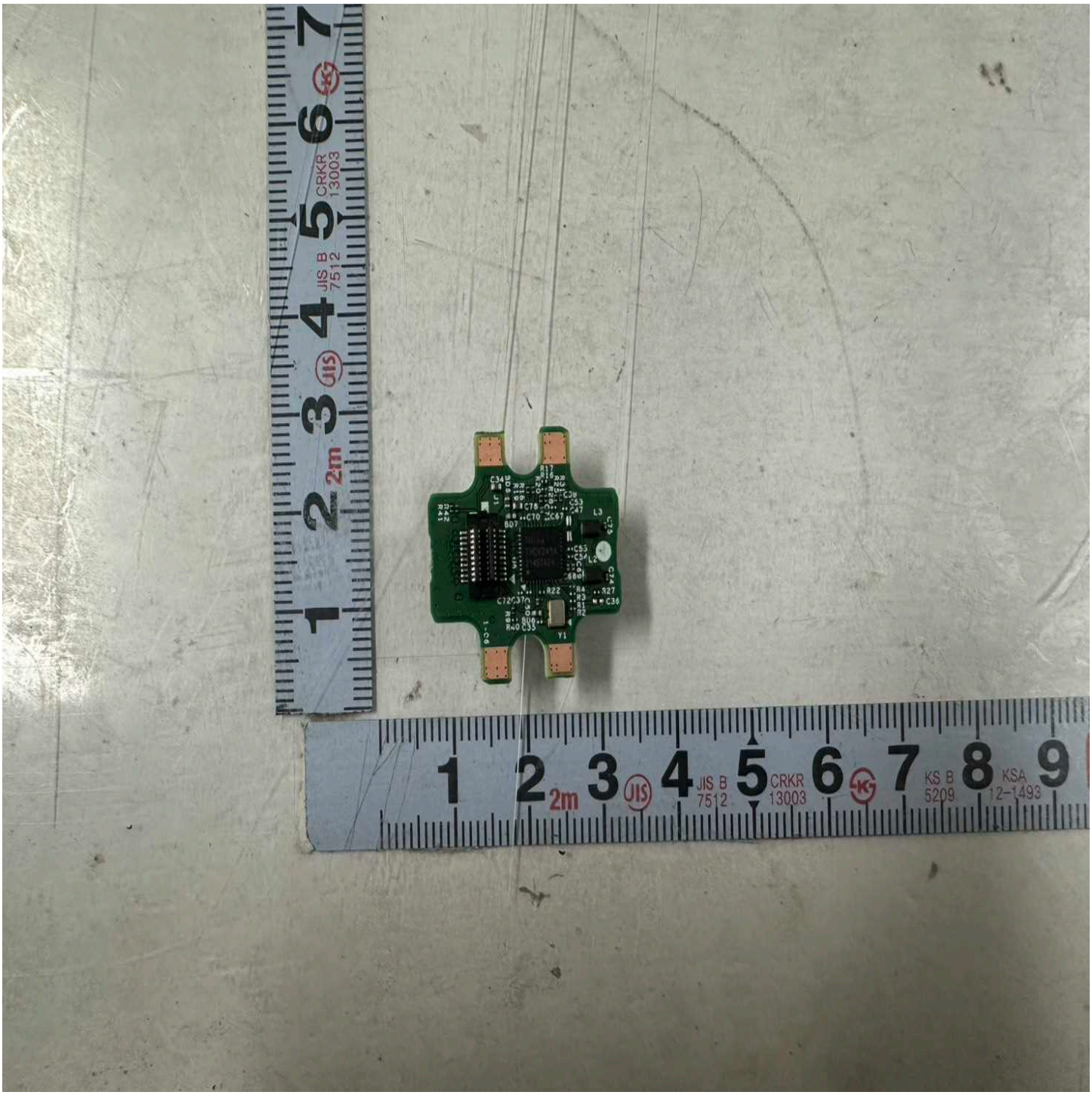

Photographs-03 Page-2

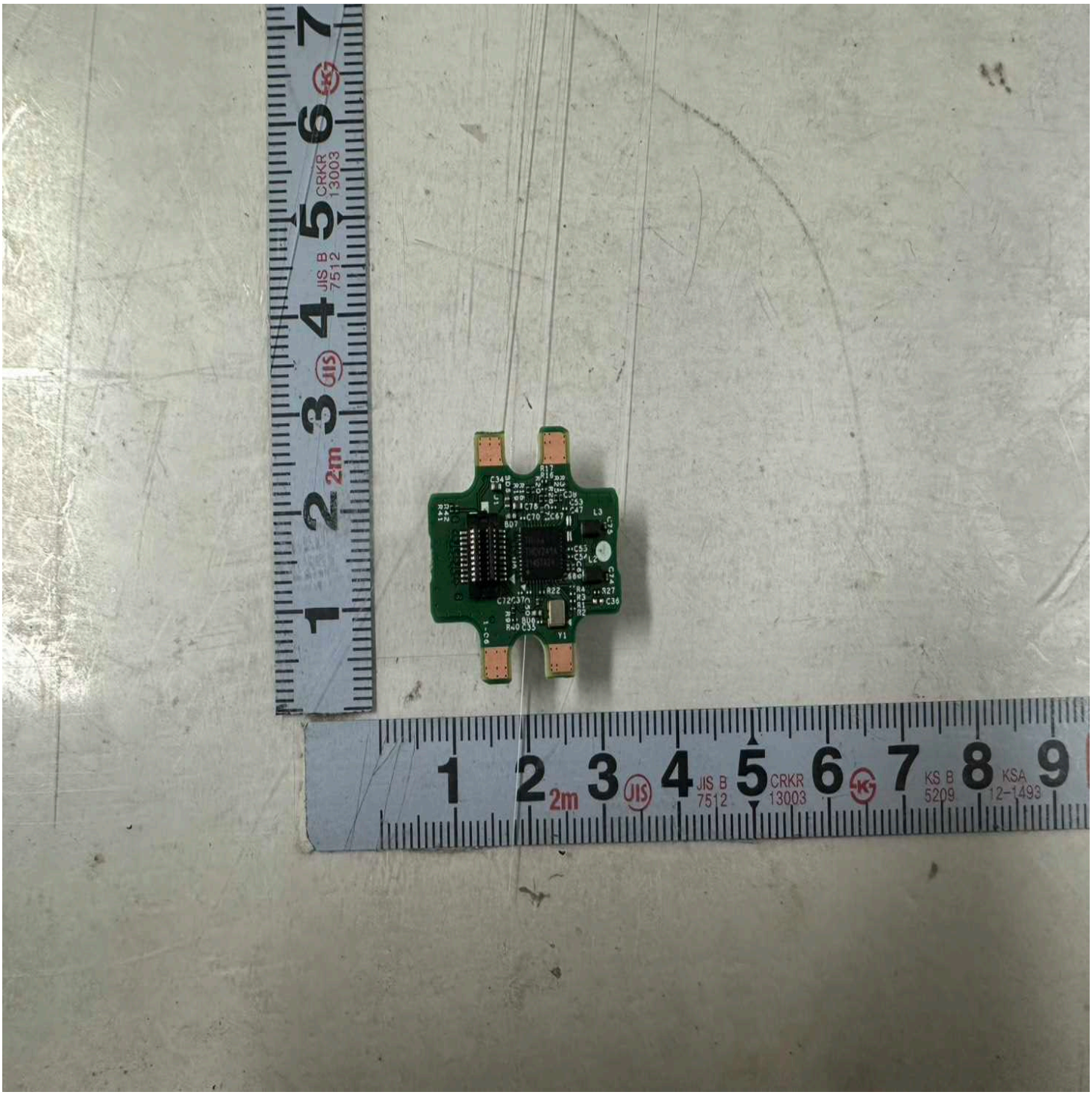

Photographs-04 Page-1

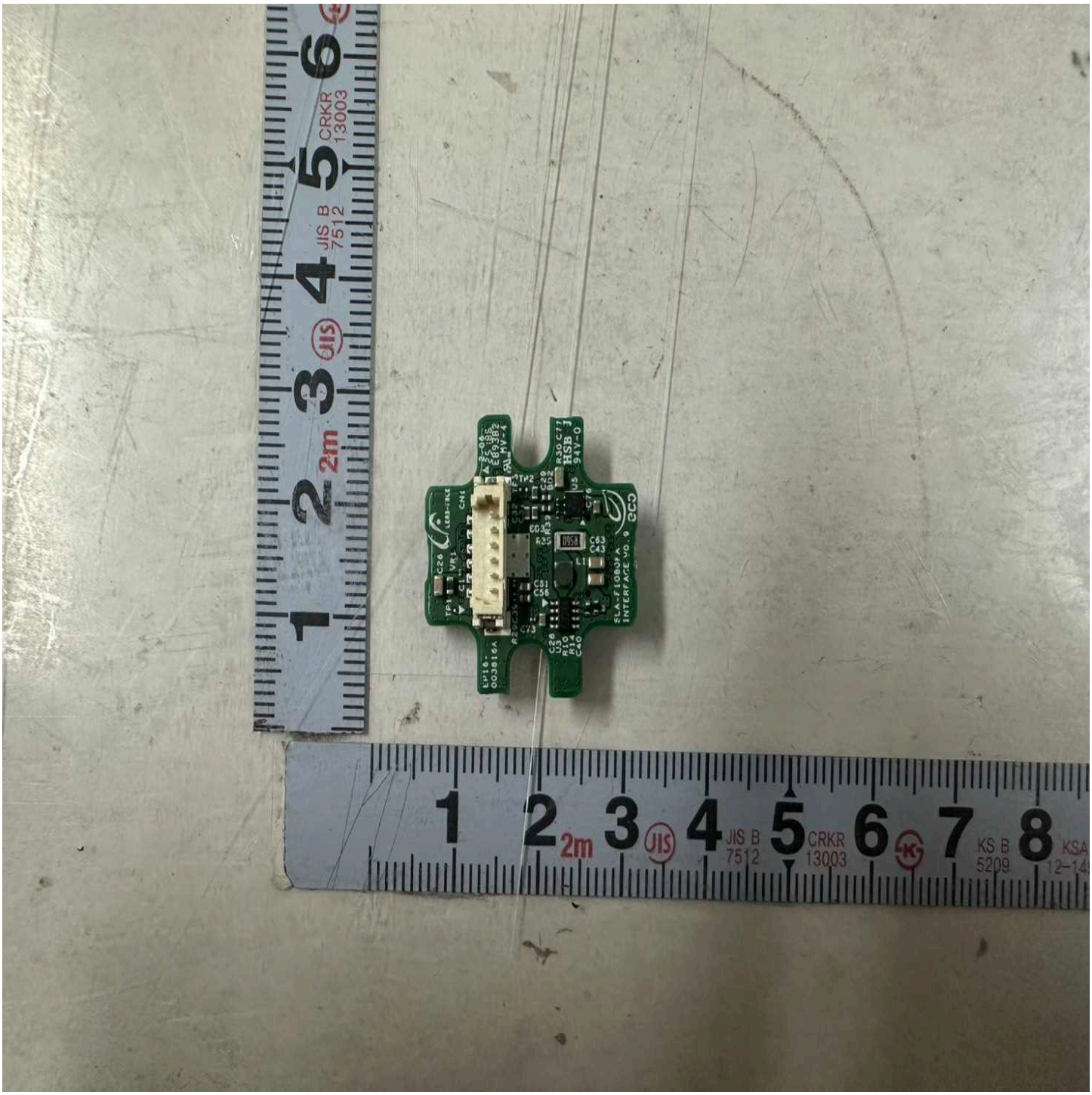

Photographs-04 Page-2

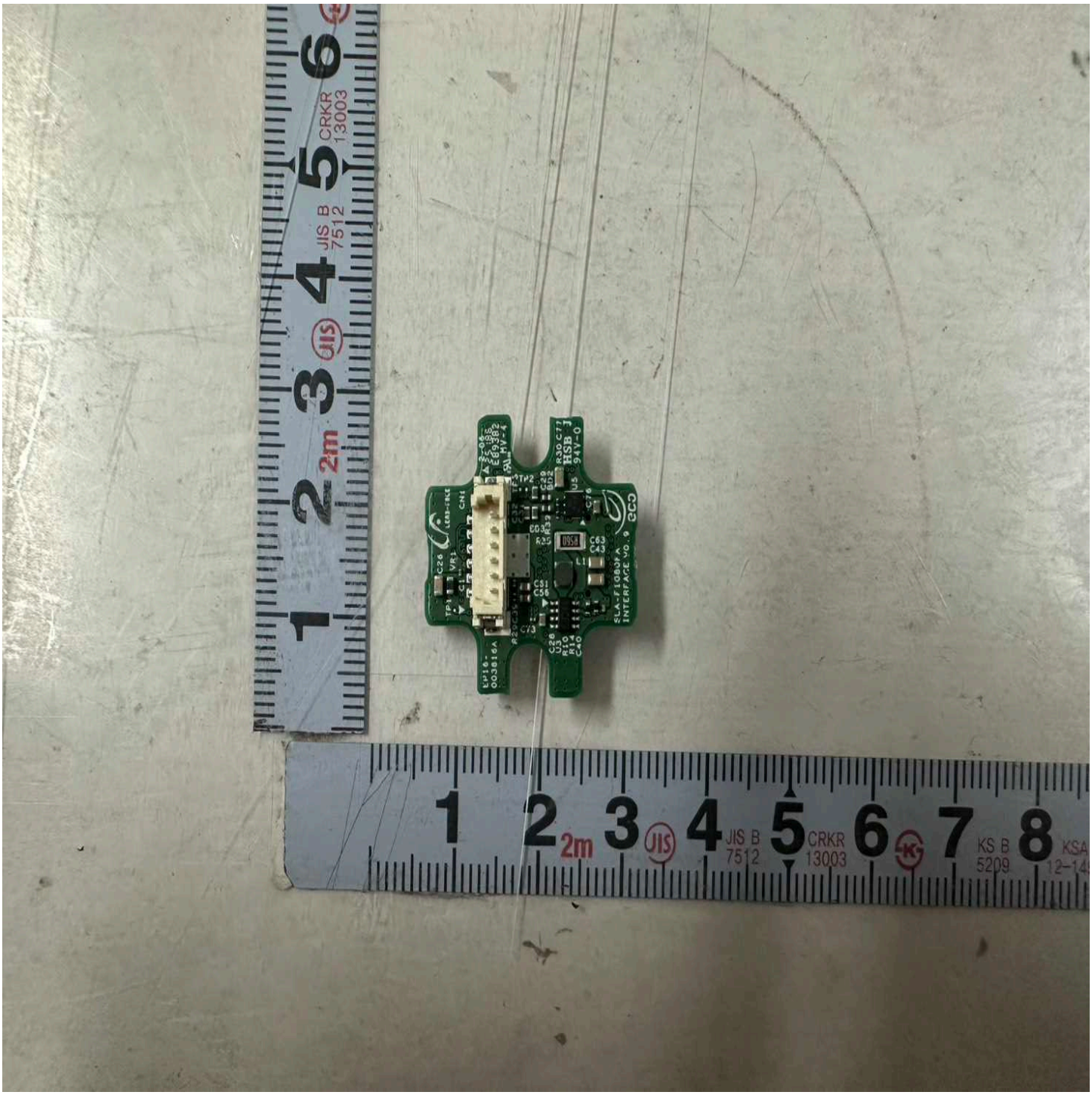

Photographs-05 Page-1

Photographs-05 Page-2

UL TEST REPORT AND PROCEDURE

Standard:	UL 62368-1, 3rd Ed, 2021-10-22 (Audio/video, information and communication technology equipment Part 1: Safety requirements) CAN/CSA C22.2 No. 62368-1:19, 3rd Ed, 2021-10-22 (Audio/video, information and communication technology equipment Part 1: Safety requirements)
Certification Type:	Listing
CCN:	AZOT, AZOT7 (Audio/video, Information and Communication Technology Equipment)
Complementary CCN:	N/A
Product:	LENS MODULE
Model:	SLA-F1080FA, SLA-F2480WA
Rating:	5 Vdc, 0.25 A
Applicant Name and Address:	HANWHA VISION CO LTD 6, PANGYO-RO 319BEON-GIL, BUNDANG-GU SEONGNAM-SI GYEONGGI-DO 13488 KOREA

This is to certify that representative samples of the products covered by this Test Report have been investigated in accordance with the above referenced Standards. The products have been found to comply with the requirements covering the category and the products are judged to be eligible for Follow-Up Service under the indicated Test Procedure. The manufacturer is authorized to use the UL Mark on such products which comply with this Test Report and any other applicable requirements of UL LLC ('UL') in accordance with the Follow-Up Service Agreement. Only those products which properly bear the UL Mark are considered as being covered by UL's Follow-Up Service under the indicated Test Procedure.

The applicant is authorized to reproduce the referenced Test Report provided it is reproduced in its entirety.

UL authorizes the applicant to reproduce the latest pages of the referenced Test Report consisting of the first page of the Specific Technical Criteria through to the end of the Conditions of Acceptability.

Any information and documentation involving UL Mark services are provided on behalf of UL LLC (UL) or any authorized licensee of UL.

Prepared By: Sohyun Lee / Project Handler Reviewed By: Seungtae Kim / Reviewer

Copyright © 2019

Supporting Documentation

The following documents located at the beginning of this Procedure supplement the requirements of this Test Report:

A. Authorization - The Authorization page may include additional Factory Identification Code markings.

B. Generic Inspection Instructions -

i. Part AC details important information which may be applicable to products covered by this Procedure. Products described in this Test Report must comply with any applicable items listed unless otherwise stated in the body of this Test Report.

ii. Part AE details any requirements which may be applicable to all products covered by this Procedure. Products described in this Test Report must comply with any applicable items listed unless otherwise stated in the body of each Test Report.

iii. Part AF details the requirements for the UL Certification Mark which is not controlled by the technical standard used to investigate these products. Products are permitted to bear only the Certification Mark(s) corresponding to the countries for which it is certified, as indicated in each Test Report.

Product Description

LENS MODULE consists of lens and cable part and supplied by 5 Vdc. (Indoor or outdoor used)

Model Differences

SLA-F1080FA is a basic model.

SLA-F2480WA is identical with basic model except for fixed lens and manufacturer's specified temperature.

Test Item Particulars

Product group ..... :	built-in component
Classification of use by ..... :	Ordinary person
Supply Connection ..... :	not mains connected: ES1
Supply tolerance ..... :	None
Supply connection – type ..... :	Not directly connected to the mains
Considered current rating of protective device .... :	N/A
Equipment mobility ..... :	movable
Over voltage category (OVC) ..... :	OVC I
Class of equipment ..... :	Class III
Special installation location ..... :	N/A
Pollution degree (PD) ..... :	PD 2
Manufacturer's specified Tma (°C) ..... :	55 Outdoor: minimum -10 (For model, SLA-F1080FA) and -30 (For model, SLA-F2480WA)
IP protection class ..... :	IP 66
Power systems ..... :	not AC mains
Altitude during operation (m) ..... :	2000 m or less
Altitude of test laboratory (m) ..... :	2000 m or less
Mass of equipment (kg) ..... :	0.11

Technical Considerations

☐ The product was submitted and evaluated for use at the maximum ambient temperature (Tma) permitted by the manufacturer's specification of : 55 °C

- The product is intended for use on the following power systems : No direct connection
- Considered current rating of protective device as part of the building installation (A) : N/A
- Mains supply tolerance (%) or absolute mains supply : No direct connection
- The following are available from the Applicant upon request : Installation (Safety) Instructions / Manual
- The outdoor equipment/enclosure was evaluated for use in an ambient range of : -10 °C to 55 °C (For model, SLA-F1080FA) and -30 °C to 55 °C (For model, SLA-F2480WA)

Additional Information

4791833036
- Maximum Normal Load: Continuous operation (Operate the camera through networked equipment.)

4791948637
- Add a model, SLA-F2480WA.
- Add a photograph of SLA-F2480WA.
- Add manufacturer's specified temperature: -30 °C to 55 °C (For model, SLA-F2480WA).

Additional Standards

The product fulfills the requirements of: N/A

Markings and Instructions

Clause Title	Marking or Instruction Details
Equipment identification marking – Manufacturer identification	Recognized Company’s name, Trade Name, Trademark or File Number
Equipment identification marking – model identification	Model Number
Equipment rating marking – ratings	Input Ratings (voltage, current)
Outdoor enclosure type	"Rainproof", IP66
Hard Copy	A. IMPORTANT or ATTENTION or similar wording B. Please check 'Manuals' from out website, before connecting to the supply. C. Company website URL (https://www.~~) or QR code.
Manual	This product is intended to be supplied by a UL Listed Power Supply Unit marked “Class 2” or “LPS” or “PS2” and rated from 5 Vdc, 0.25 A.
SCC requirement	If the signal words DANGER, WARNING, and CAUTION are included, a French manual is provided.

Special Instructions to UL Representative

N/A

BD1.0	**TABLE: Production-Line Testing Requirements**					
BD1.1	**Electric Strength Test Special Constructions – Refer to Generic Inspection Instructions, Part AC for further information.**					
Model	Component	Removable parts	Test probe location	Test V rms	Test V dc	Test Time, s
N/A	N/A	N/A	N/A	N/A	N/A	N/A
BD1.2	**Earthing Continuity Test Exemptions – This test is not required for the following models:**					
	All models					
BD1.3	**Electric Strength Test Exemptions – This test is not required for the following models:**					
	All models					
BD1.4	**Electric Strength Test Component Exemptions – The following solid-state components may be disconnected from the remainder of the circuitry during the performance of this test.**					
	All models					

BE1.0	**Sample and Test Specifics for Follow-Up Tests at UL**				
Model	Component	Material	Test	Sample (s)	Test Specifics
N/A	N/A	N/A	N/A	N/A	N/A

4.1.2	**TABLE: List of critical components**					**Pass**
Object / part No.	Manufacturer/ trademark	Type / model	Technical data	Product Category CCN(s)	Mark(s) of conformity	Supplement ID
Enclosure (Metal)	Interchangeable	Interchangeable	Aluminum, Min. 1.4 mm thickness, See enclosure for dimension.	-	Tested in equipment	
Gasket	NAMYANG VINA	C-VMQ-50-BK	Gasket Test was conducted under E158873-A6034	-	Tested in equipment	
PWB	HANNSTAR BOARD CORP	MV-4	Min. V-0, 130 deg. C	ZPMV2	UL (E89382)	
PWB - Alternate	Interchangeable	Interchangeable	Min. V-0, 130 deg. C	ZPMV2	UL	
Outdoor Label	Interchangeable	Interchangeable	Suitable for use on each type of surface to which applied, rated for maximum and minimum surface temperature specified, or Min. - 10 deg. C to Max. 55 deg. C (For model, SLA-F1080FA) and Min. - 30 deg. C to Max. 55 deg. C (For model, SLA-F2480WA) if not specified.	PGDQ2 or PGJI2	UL	

Enclosures

Type	Supplement Id	Description
Photographs	03-01	External View
Photographs	03-02	Internal View (Model, SLA-F1080FA)
Photographs	03-03	Interface Board - Top
Photographs	03-04	Interface Board - Bottom
Photographs	03-05	Internal View (Model, SLA-F2480WA)
Manuals	06-01	Manual
Miscellaneous	07-01	Enclosure Drawing
Miscellaneous	07-02	Label

The following Page(s) are related to Manuals-01. The next supplement, if applicable, will be identified with a new Supplement Page Heading.

Important
Please check 'Manuals' from our website, before connecting to the Supply,
https://www.hanwhavision.com/en/download-data/

Warranty
Please check "Product warranty information" from our website.
https://www.hanwhavision.com/en/support/warranty/

We recommend to use the officially compatible VMS version or latest Hanwha NVR version when integrating with VMS or Hanwha NVR.

eco
RoHS compliant

Hanwha Vision cares for the environment at all product manufacturing stages, and is taking measures to provide customers with more environmentally friendly products.
The Eco mark represents Hanwha Vision's devotion to creating environmentally friendly products, and indicates that the product satisfies the EU RoHS Directive.

Correct Disposal of This Product (Waste Electrical & Electronic Equipment)

(Applicable in the European Union and other European countries with separate collection systems)

This marking on the product, accessories or literature indicates that the product and its electronic accessories (e.g. charger, headset, USB cable) should not be disposed of with other household waste at the end of their working life. To prevent possible harm to the environment or human health from uncontrolled waste disposal, please separate these items from other types of waste and recycle them responsibly to promote the sustainable reuse of material resources.

Household users should contact either the retailer where they purchased this product, or their local government office, for details of where and how they can take these items for environmentally safe recycling.

Business users should contact their supplier and check the terms and conditions of the purchase contract. This product and its electronic accessories should not be mixed with other commercial wastes for disposal.

Correct disposal of batteries in this product

(Applicable in the European Union and other European countries with separate battery return systems.)

This marking on the battery, manual or packaging indicates that the batteries in this product should not be disposed of with other household waste at the end of their working life. Where marked, the chemical symbols Hg, Cd or Pb indicate that the battery contains mercury, cadmium or lead above the reference levels in EC Directive 2006/66. If batteries are not properly disposed of, these substances can cause harm to human health or the environment.

To protect natural resources and to promote material reuse, please separate batteries from other types of waste and recycle them through your local, free battery return system.

1. Read these instructions.
2. Keep these instructions.
3. Heed all warnings.
4. Follow all instructions.
5. Do not use this apparatus near water.
6. Clean the contaminated area on the product surface with a soft, dry cloth or a damp cloth.
   (Do not use a detergent or cosmetic products that contain alcohol, solvents or surfactants or oil constituents as they may deform or cause damage to the product.)
7. Do not block any ventilation openings, Install in accordance with the manufacturer's instructions.
8. Do not install near any heat sources such as radiators, heat registers, stoves, or other apparatus (including amplifiers) that produce heat.
9. Do not defeat the safety purpose of the polarized or grounding-type plug. A polarized plug has two blades with one wider than the other. A grounding type plug has two blades and a third grounding prong. The wide blade or the third prong are provided for your safety. If the provided plug does not fit into your outlet, consult an electrician for replacement of the obsolete outlet.
10. Protect the power cord from being walked on or pinched particularly at plugs, convenience receptacles, and the point where they exit from the apparatus.
11. Only use attachments/ accessories specified by the manufacturer.
12. Use only with the cart, stand, tripod, bracket, or table specified by the manufacturer, or sold with the apparatus. When a cart is used, use caution when moving the cart/apparatus combination to avoid injury from tip-over.

13. Unplug this apparatus during lighting storms or when unused for long periods of time.

14. Refer all servicing to qualified service personnel. Servicing is required when the apparatus has been damaged in any way, such as power-supply cord or plug is damaged, liquid has been spilled or objects have fallen into the apparatus, the apparatus has been exposed to rain or moisture, does not operate normally, or has been dropped.

15. This product is intended to be supplied by a UL Listed Power Supply Unit marked “Class 2” or “LPS” or “PS2” and rated from 5 Vdc, 0.25 A.

Any changes or modifications in construction of this device which are not expressly approved by the party responsible for compliance could void the user's authority to operate the equipment.

This device complies with part 15 of the FCC Rules. Operation is subject to the following two conditions: (1) This device may not cause harmful interference, and (2) this device must accept any interference received, including interference that may cause undesired operation.

This equipment has been tested and found to comply with the limits for a Class A digital device, pursuant to part 15 of the FCC Rules. These limits are designed to provide reasonable protection against harmful interference when the equipment is operated in a commercial environment. This equipment generates, uses, and can radiate radio frequency energy and, if not installed and used in accordance with the instruction manual, may cause harmful interference to radio communications. Operation of this equipment in a residential area is likely to cause harmful interference in which case the user will be required to correct the interference at his own expense.

- Reorient or relocate the receiving antenna.
- Increase the separation between the equipment and receiver.
- Connect the equipment into an outlet on a circuit different from that to which the receiver is connected.
- Consult the dealer or an experienced radio/TV technician for help.

- SLA-T2480VA

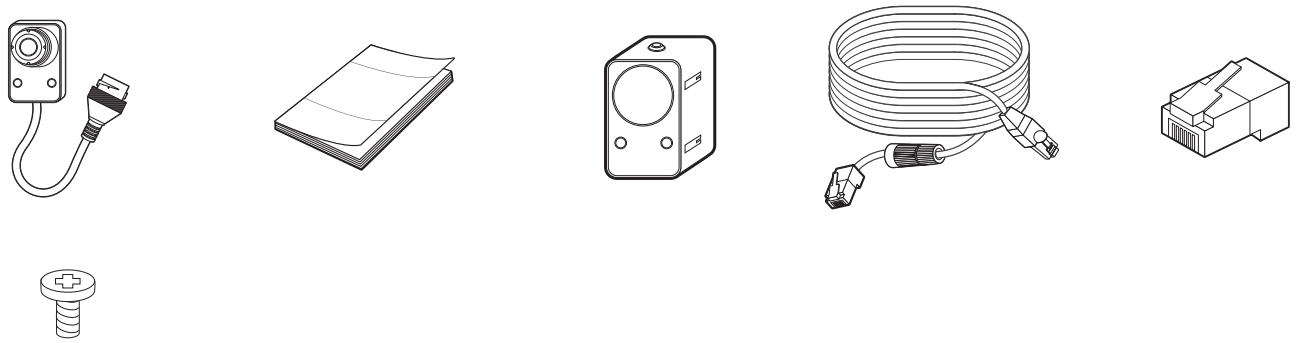

- SLA-T4680VA

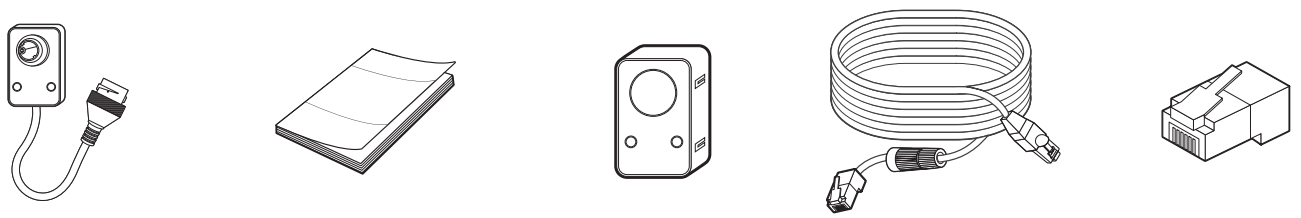

- SLA-F1080FA

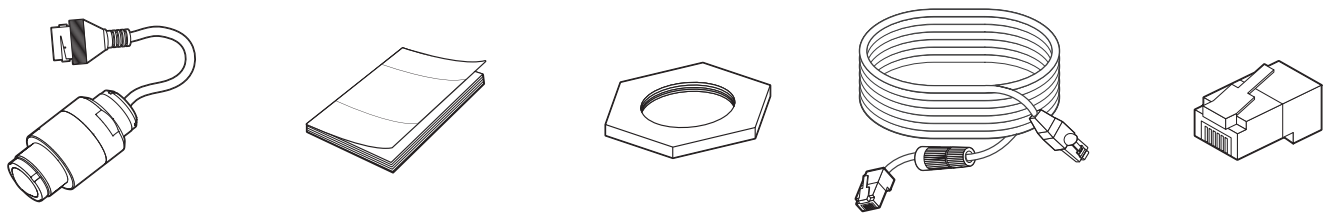

- SLA-F2480A

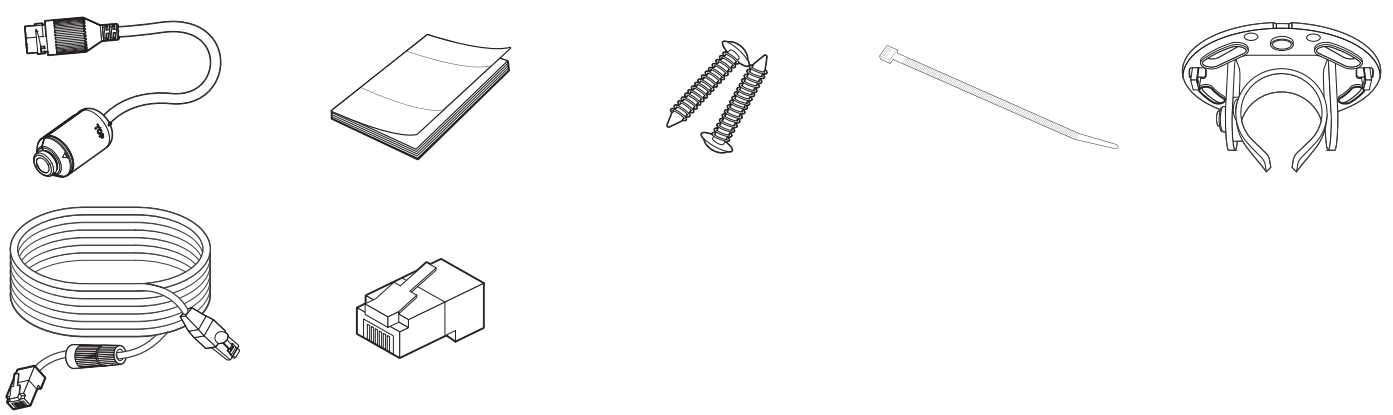

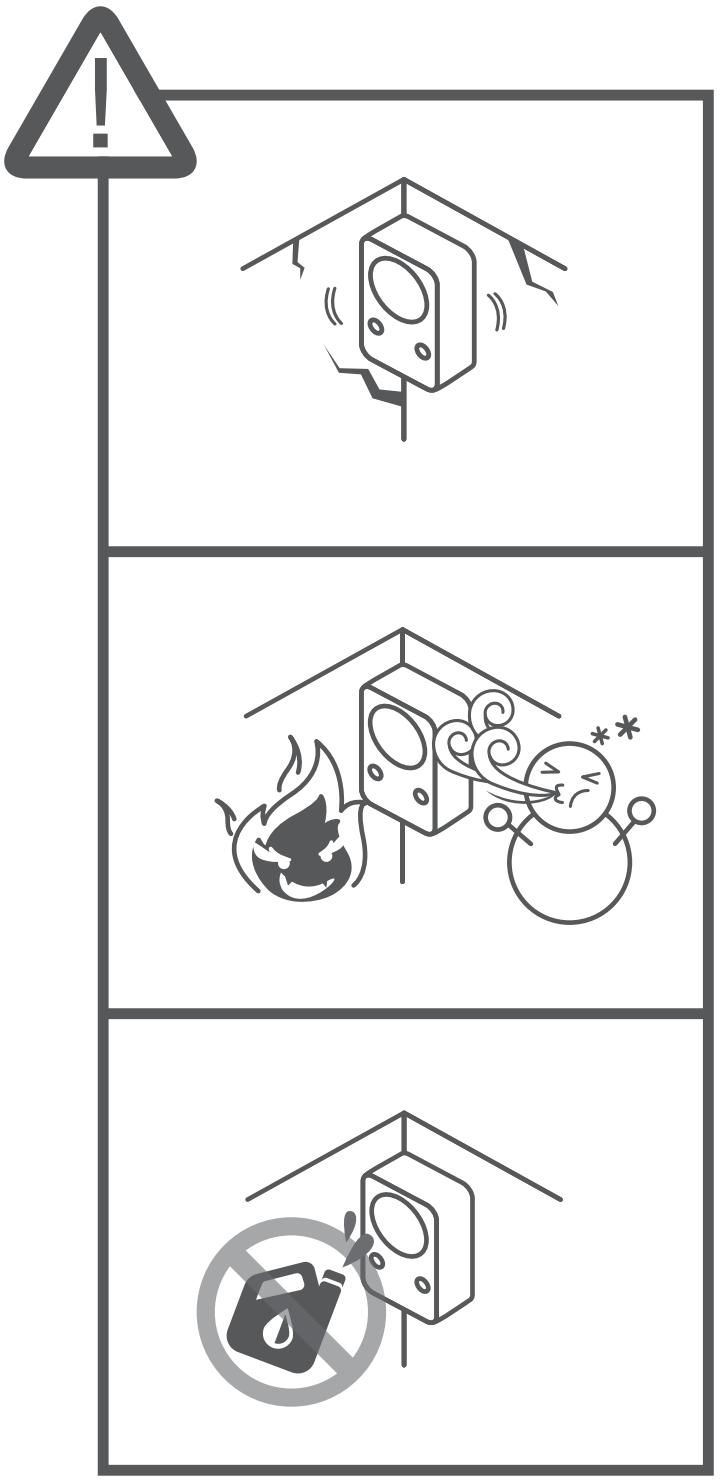

INSTALLATION

1-1

- SLA-T1080FA/SLA-F1080FA

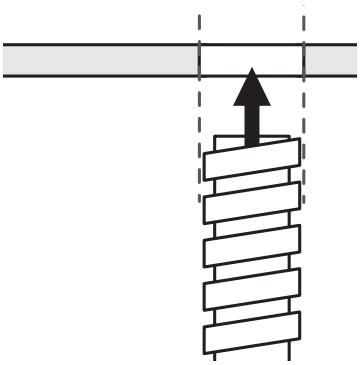

1-2

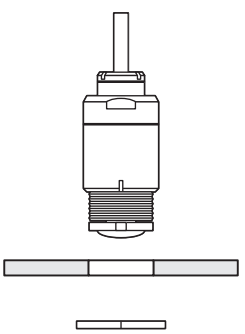

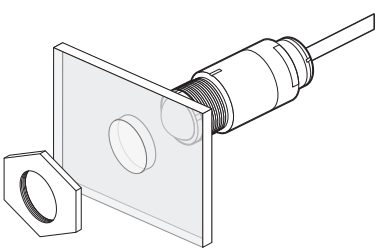

1-3

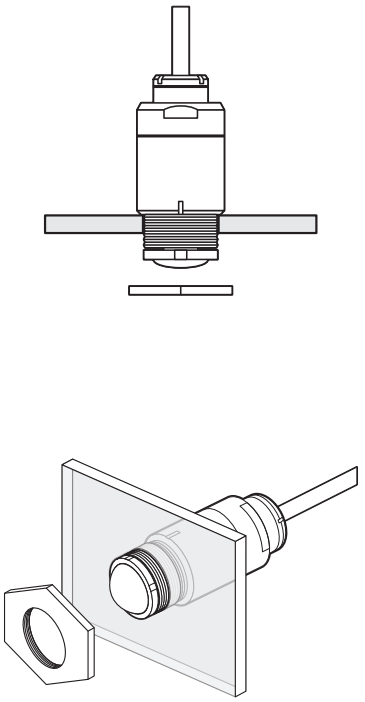

1-4

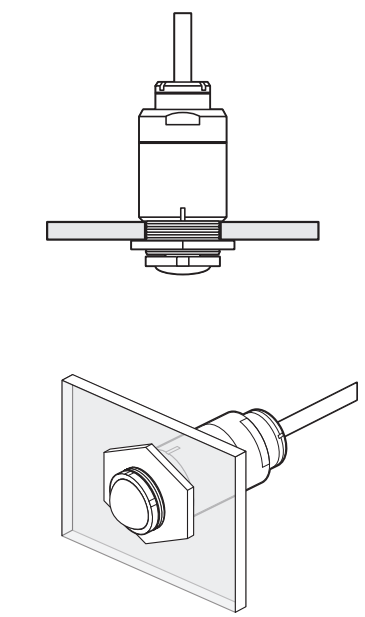

1-5

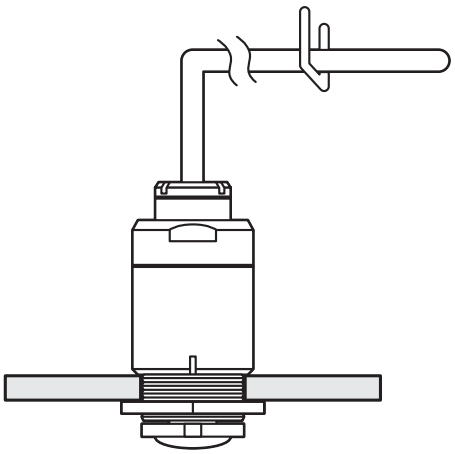

The following Page(s) are related to Manuals-01. The next supplement, if applicable, will be identified with a new Supplement Page Heading.

Important
Please check 'Manuals' from our website, before connecting to the Supply,
https://www.hanwhavision.com/en/download-data/

Warranty
Please check "Product warranty information" from our website.
https://www.hanwhavision.com/en/support/warranty/

We recommend to use the officially compatible VMS version or latest Hanwha NVR version when integrating with VMS or Hanwha NVR.

eco
RoHS compliant

Hanwha Vision cares for the environment at all product manufacturing stages, and is taking measures to provide customers with more environmentally friendly products.
The Eco mark represents Hanwha Vision's devotion to creating environmentally friendly products, and indicates that the product satisfies the EU RoHS Directive.

Correct Disposal of This Product (Waste Electrical & Electronic Equipment)

(Applicable in the European Union and other European countries with separate collection systems)

This marking on the product, accessories or literature indicates that the product and its electronic accessories (e.g. charger, headset, USB cable) should not be disposed of with other household waste at the end of their working life. To prevent possible harm to the environment or human health from uncontrolled waste disposal, please separate these items from other types of waste and recycle them responsibly to promote the sustainable reuse of material resources.

Household users should contact either the retailer where they purchased this product, or their local government office, for details of where and how they can take these items for environmentally safe recycling.

Business users should contact their supplier and check the terms and conditions of the purchase contract. This product and its electronic accessories should not be mixed with other commercial wastes for disposal.

Correct disposal of batteries in this product

(Applicable in the European Union and other European countries with separate battery return systems.)

This marking on the battery, manual or packaging indicates that the batteries in this product should not be disposed of with other household waste at the end of their working life. Where marked, the chemical symbols Hg, Cd or Pb indicate that the battery contains mercury, cadmium or lead above the reference levels in EC Directive 2006/66. If batteries are not properly disposed of, these substances can cause harm to human health or the environment.

To protect natural resources and to promote material reuse, please separate batteries from other types of waste and recycle them through your local, free battery return system.

1. Read these instructions.
2. Keep these instructions.
3. Heed all warnings.
4. Follow all instructions.
5. Do not use this apparatus near water.
6. Clean the contaminated area on the product surface with a soft, dry cloth or a damp cloth.
   (Do not use a detergent or cosmetic products that contain alcohol, solvents or surfactants or oil constituents as they may deform or cause damage to the product.)
7. Do not block any ventilation openings, Install in accordance with the manufacturer's instructions.
8. Do not install near any heat sources such as radiators, heat registers, stoves, or other apparatus (including amplifiers) that produce heat.
9. Do not defeat the safety purpose of the polarized or grounding-type plug. A polarized plug has two blades with one wider than the other. A grounding type plug has two blades and a third grounding prong. The wide blade or the third prong are provided for your safety. If the provided plug does not fit into your outlet, consult an electrician for replacement of the obsolete outlet.
10. Protect the power cord from being walked on or pinched particularly at plugs, convenience receptacles, and the point where they exit from the apparatus.
11. Only use attachments/ accessories specified by the manufacturer.
12. Use only with the cart, stand, tripod, bracket, or table specified by the manufacturer, or sold with the apparatus. When a cart is used, use caution when moving the cart/apparatus combination to avoid injury from tip-over.

13. Unplug this apparatus during lighting storms or when unused for long periods of time.

14. Refer all servicing to qualified service personnel. Servicing is required when the apparatus has been damaged in any way, such as power-supply cord or plug is damaged, liquid has been spilled or objects have fallen into the apparatus, the apparatus has been exposed to rain or moisture, does not operate normally, or has been dropped.

15. This product is intended to be supplied by a UL Listed Power Supply Unit marked “Class 2” or “LPS” or “PS2” and rated from 5 Vdc, 0.25 A.

Any changes or modifications in construction of this device which are not expressly approved by the party responsible for compliance could void the user's authority to operate the equipment.

This device complies with part 15 of the FCC Rules. Operation is subject to the following two conditions: (1) This device may not cause harmful interference, and (2) this device must accept any interference received, including interference that may cause undesired operation.

This equipment has been tested and found to comply with the limits for a Class A digital device, pursuant to part 15 of the FCC Rules. These limits are designed to provide reasonable protection against harmful interference when the equipment is operated in a commercial environment. This equipment generates, uses, and can radiate radio frequency energy and, if not installed and used in accordance with the instruction manual, may cause harmful interference to radio communications. Operation of this equipment in a residential area is likely to cause harmful interference in which case the user will be required to correct the interference at his own expense.

- Reorient or relocate the receiving antenna.
- Increase the separation between the equipment and receiver.
- Connect the equipment into an outlet on a circuit different from that to which the receiver is connected.
- Consult the dealer or an experienced radio/TV technician for help.

- SLA-T2480VA

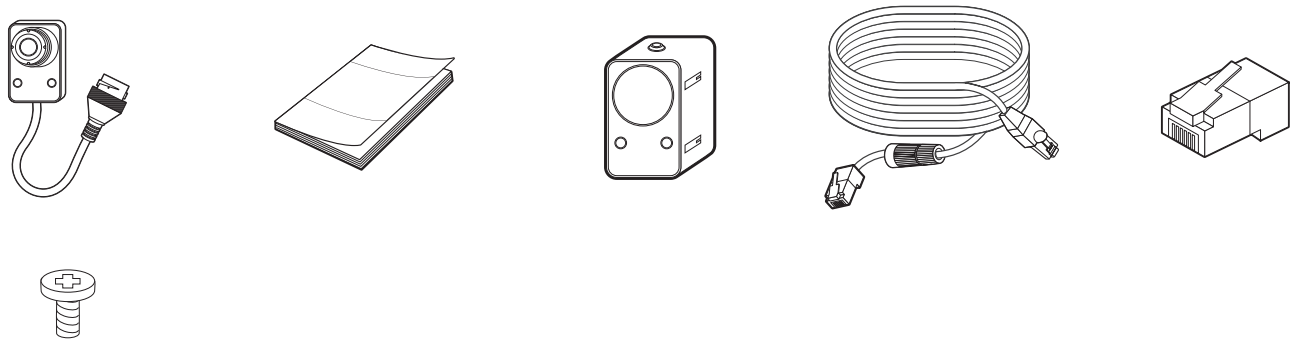

- SLA-T4680VA

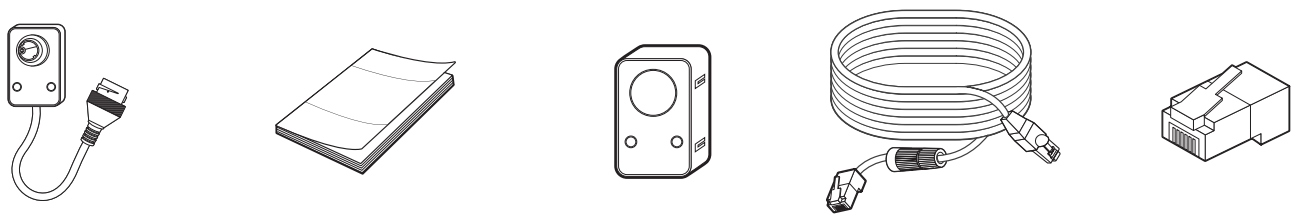

- SLA-F1080FA

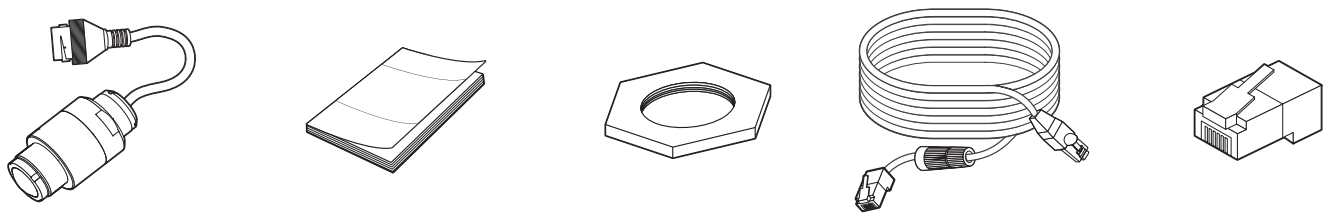

- SLA-F2480A

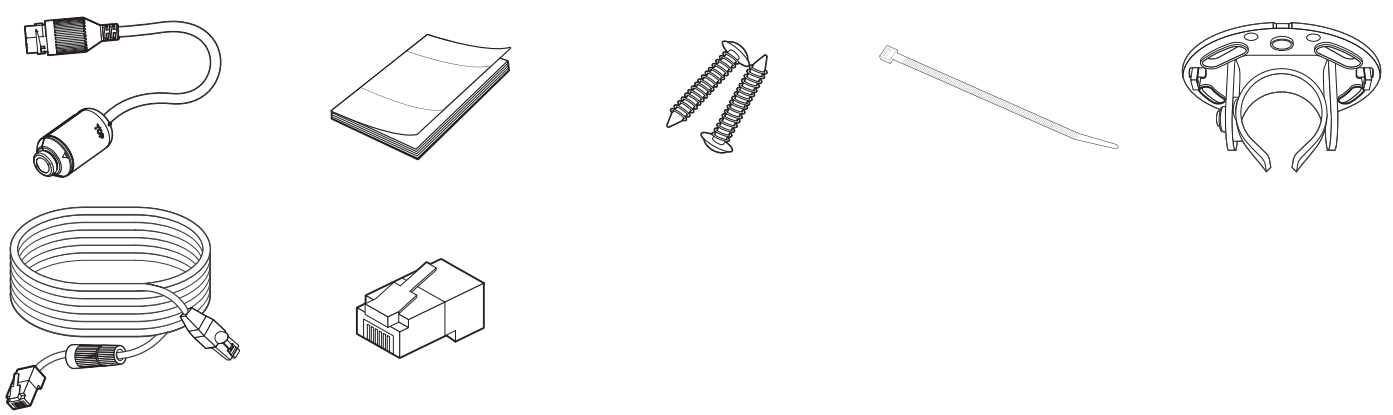

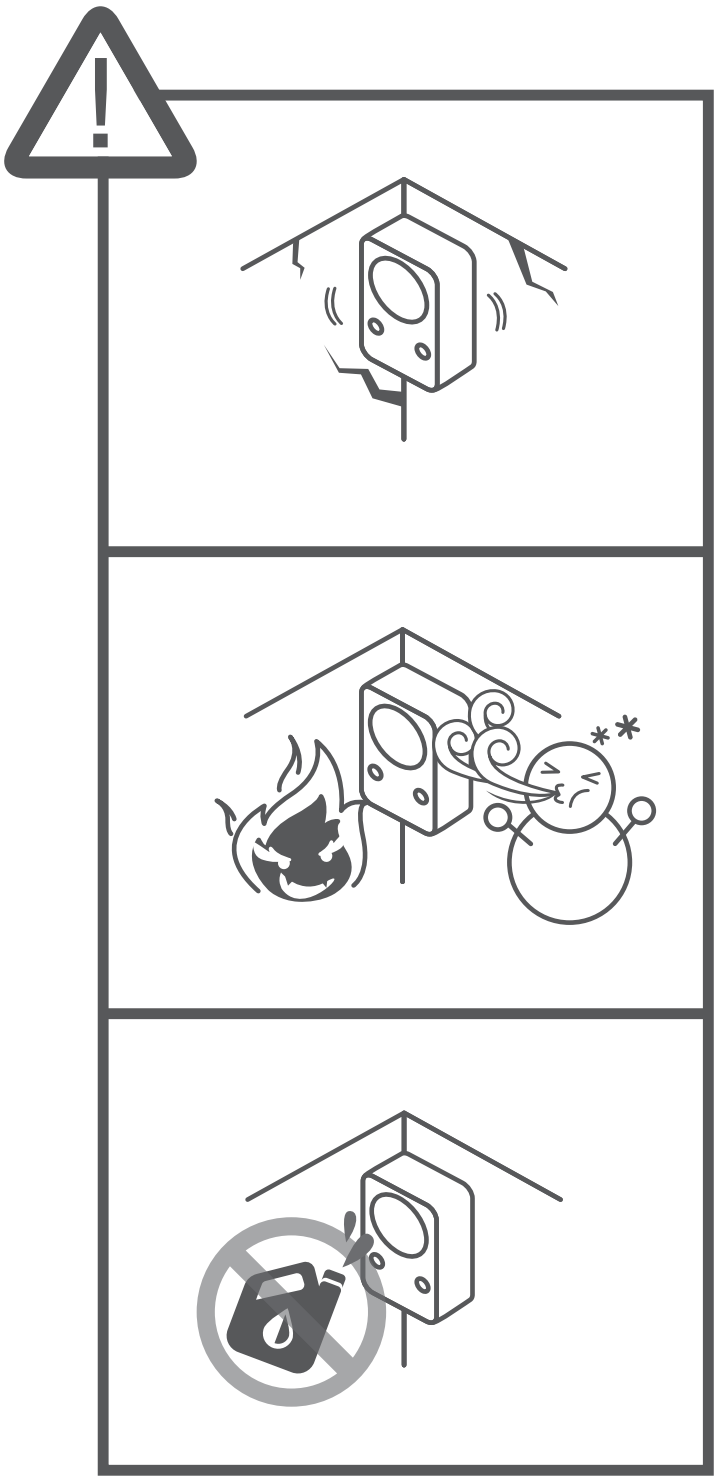

INSTALLATION

1-1

- SLA-T1080FA/SLA-F1080FA

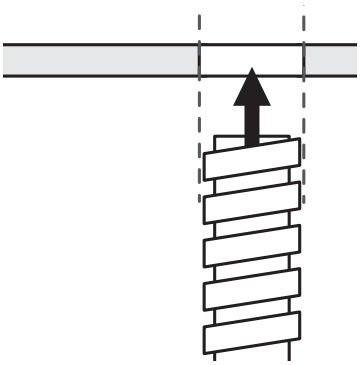

1-2

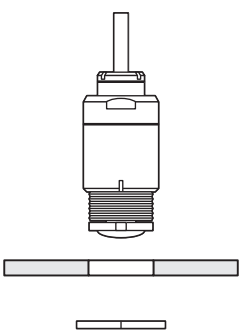

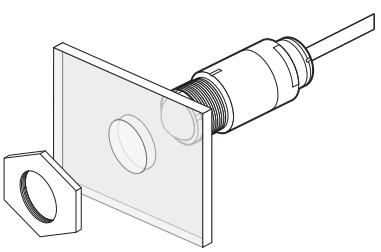

1-3

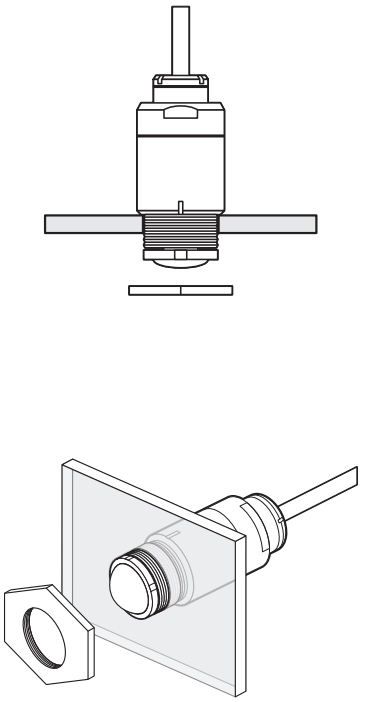

1-4

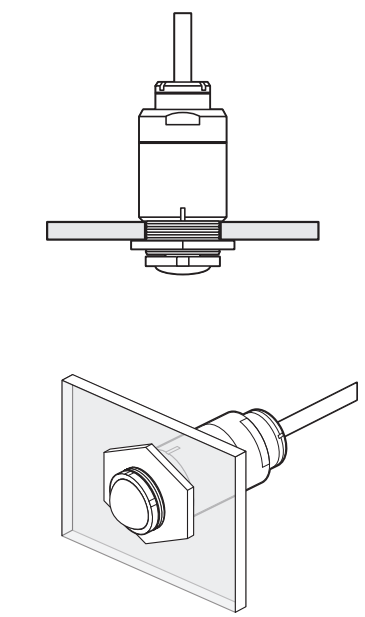

1-5

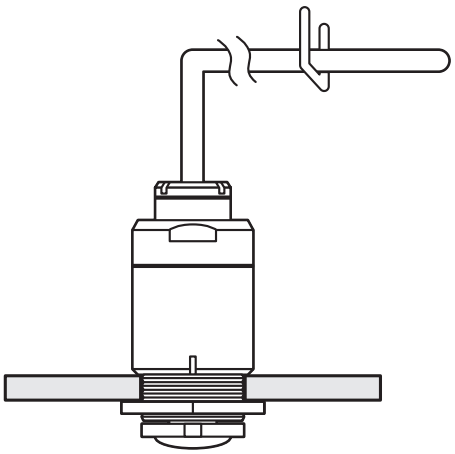

The following Page(s) are related to Miscellaneous-01. The next supplement, if applicable, will be identified with a new Supplement Page Heading.

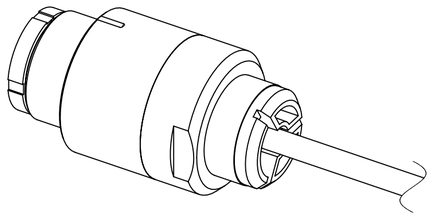

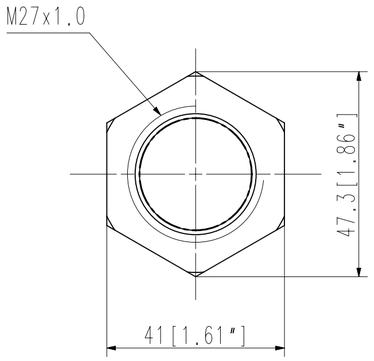

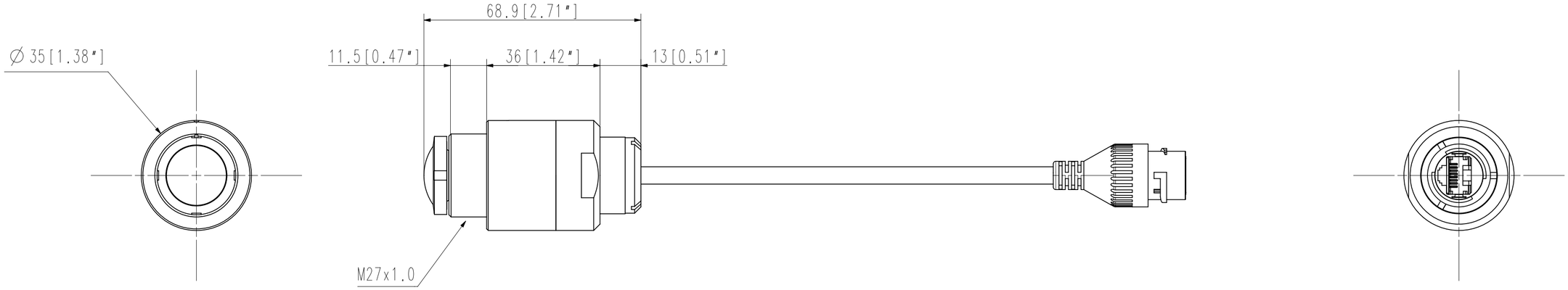

3	SLA-F1080FA	'25.06.13
2	SLA-T1080FA	'21.04.08
1	SLA-T1080F	'17.09.13
No.	MODEL NAME	DATE

Unit:mm[inch] SCALE:1/1 Hanwha Techwin

A2

© Hanwha Techwin Co.,Ltd. All rights reserved.

The following Page(s) are related to Miscellaneous-01. The next supplement, if applicable, will be identified with a new Supplement Page Heading.

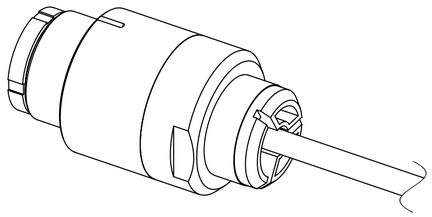

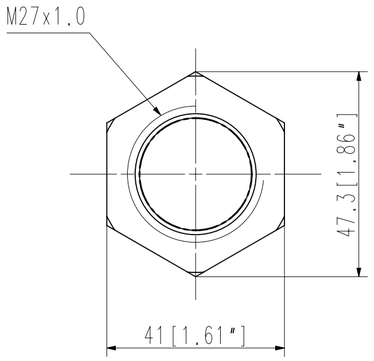

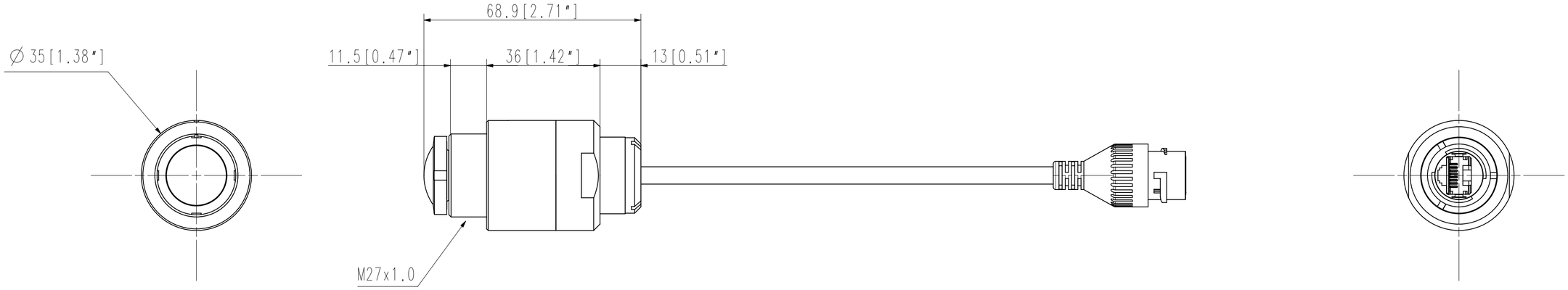

3	SLA-F1080FA	'25.06.13
2	SLA-T1080FA	'21.04.08
1	SLA-T1080F	'17.09.13
No.	MODEL NAME	DATE

Unit:mm[inch] SCALE:1/1 Hanwha Techwin

A2

© Hanwha Techwin Co.,Ltd. All rights reserved.

LENS MODULE

MODEL : SLA-F1080FA

DC 5V ⎓ 0.25A

M/C: SLA-F1080FA/VEX Fac. ID : V

2025.05 S/N: ZWMW70GY50000WR

R-R-HWVS-SLAF1080FA

Rainproof / Étanche IP66

CAN ICES-3(A)/NMB-3(A)

HANWHA VISION CO.,LTD. MADE IN VIETNAM

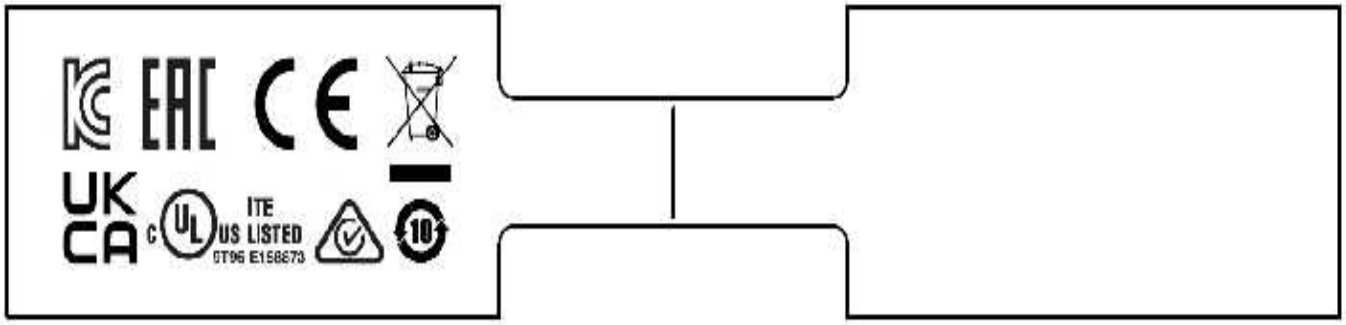

LENS MODULE

MODEL : SLA-F1080FA

DC 5V ⎓ 0.25A

M/C: SLA-F1080FA/VEX Fac. ID : V

2025.05 S/N: ZWMW70GY50000WR

R-R-HWVS-SLAF1080FA

Rainproof / Étanche IP66

CAN ICES-3(A)/NMB-3(A)

HANWHA VISION CO.,LTD. MADE IN VIETNAM

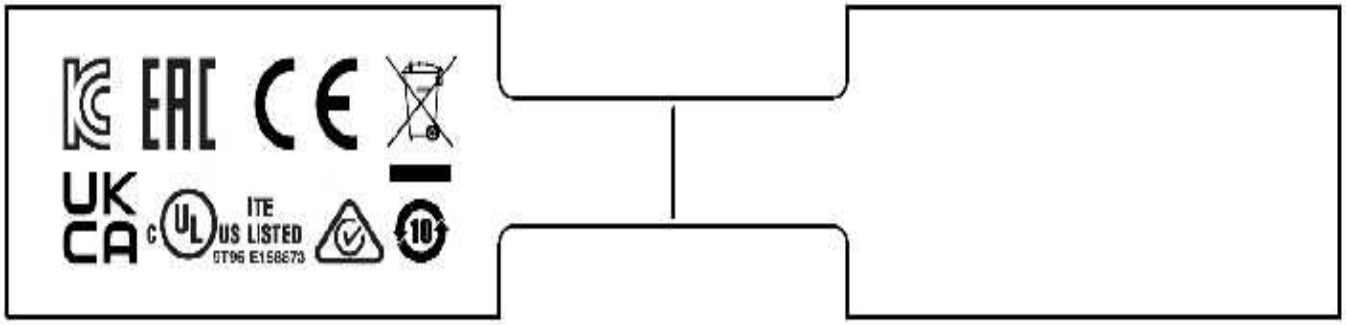

Photographs-01 Page-1

Photographs-01 Page-2

Photographs-02 Page-1

Photographs-02 Page-2

Photographs-03 Page-1

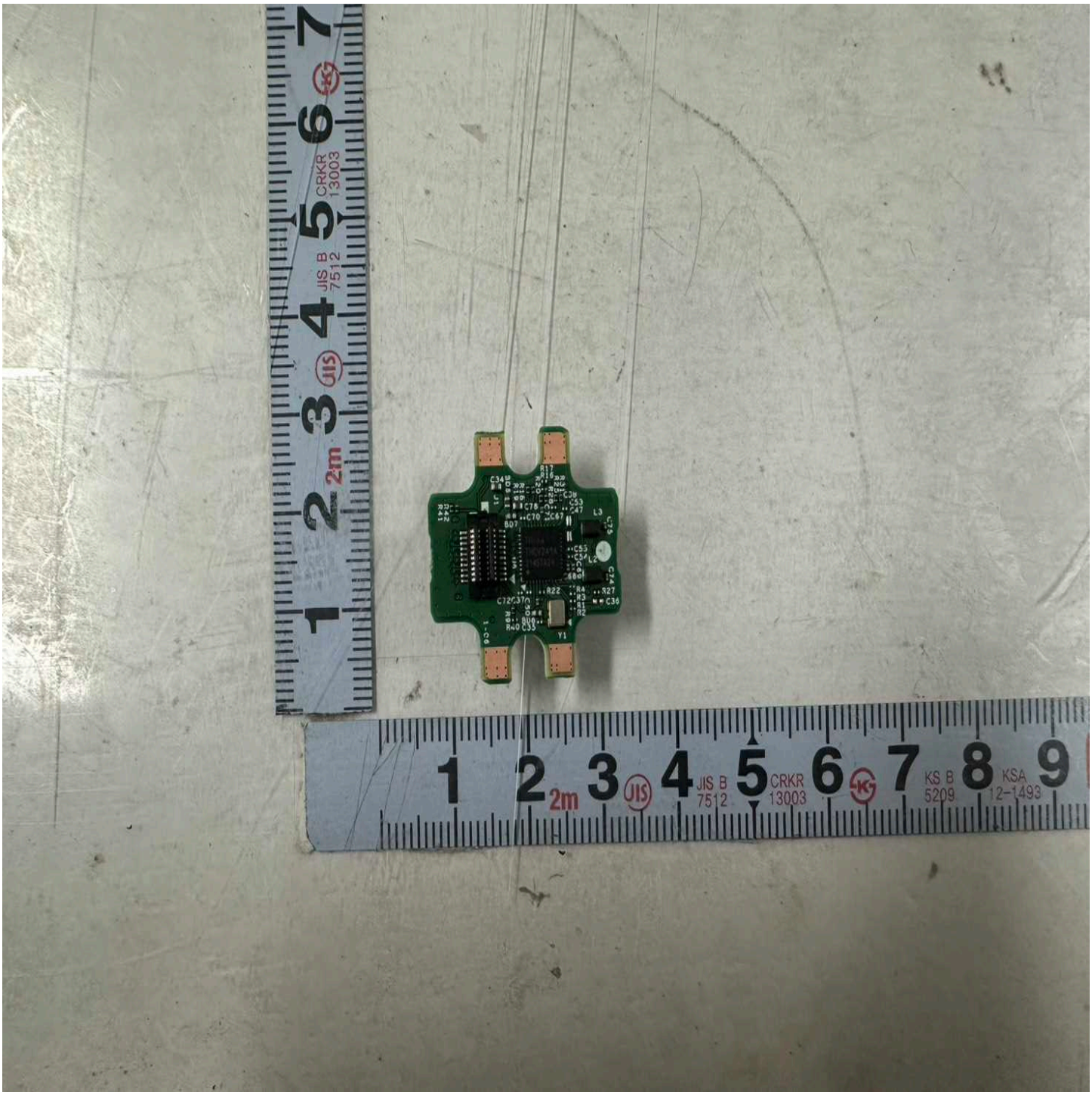

Photographs-03 Page-2

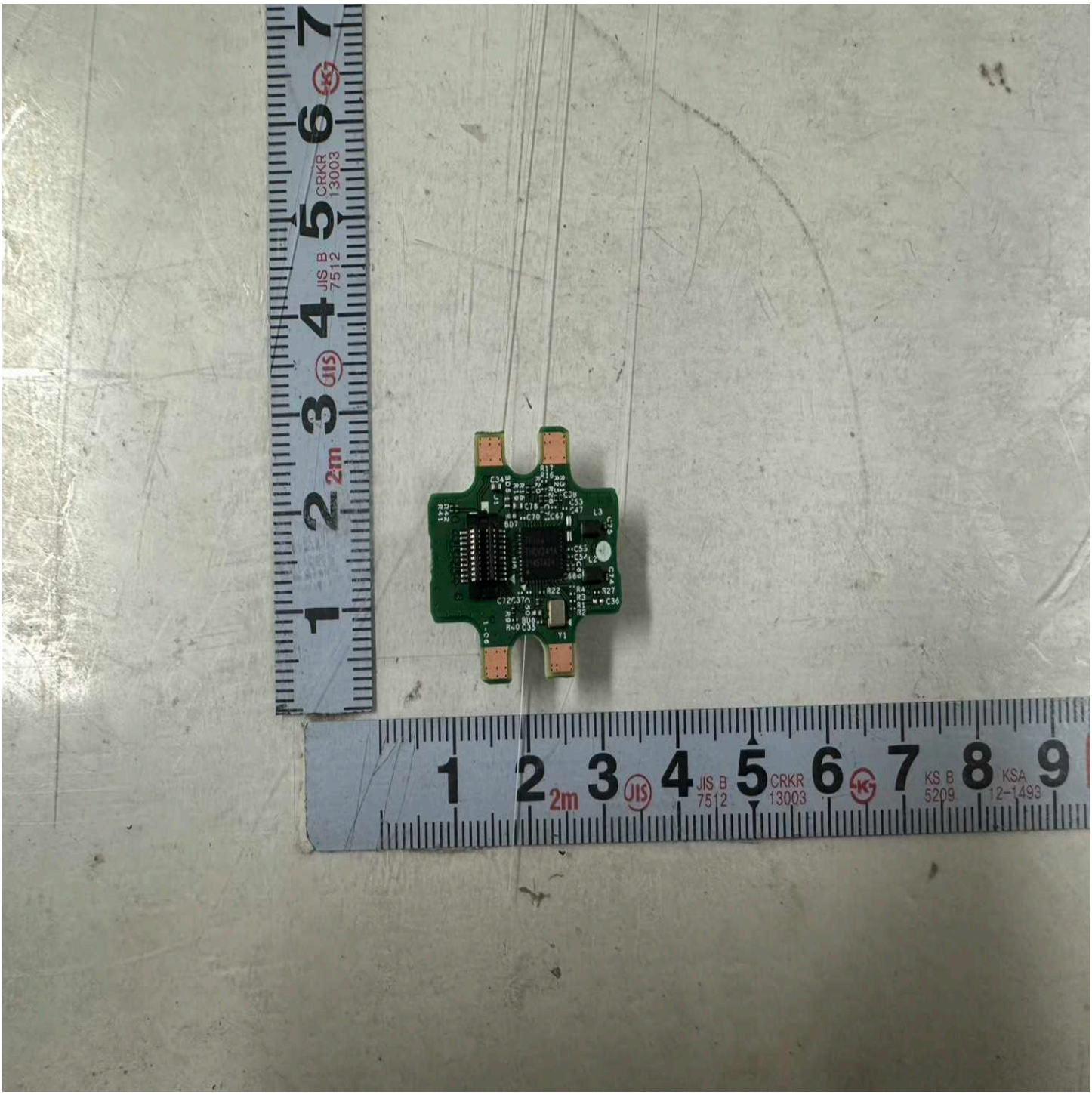

Photographs-04 Page-1

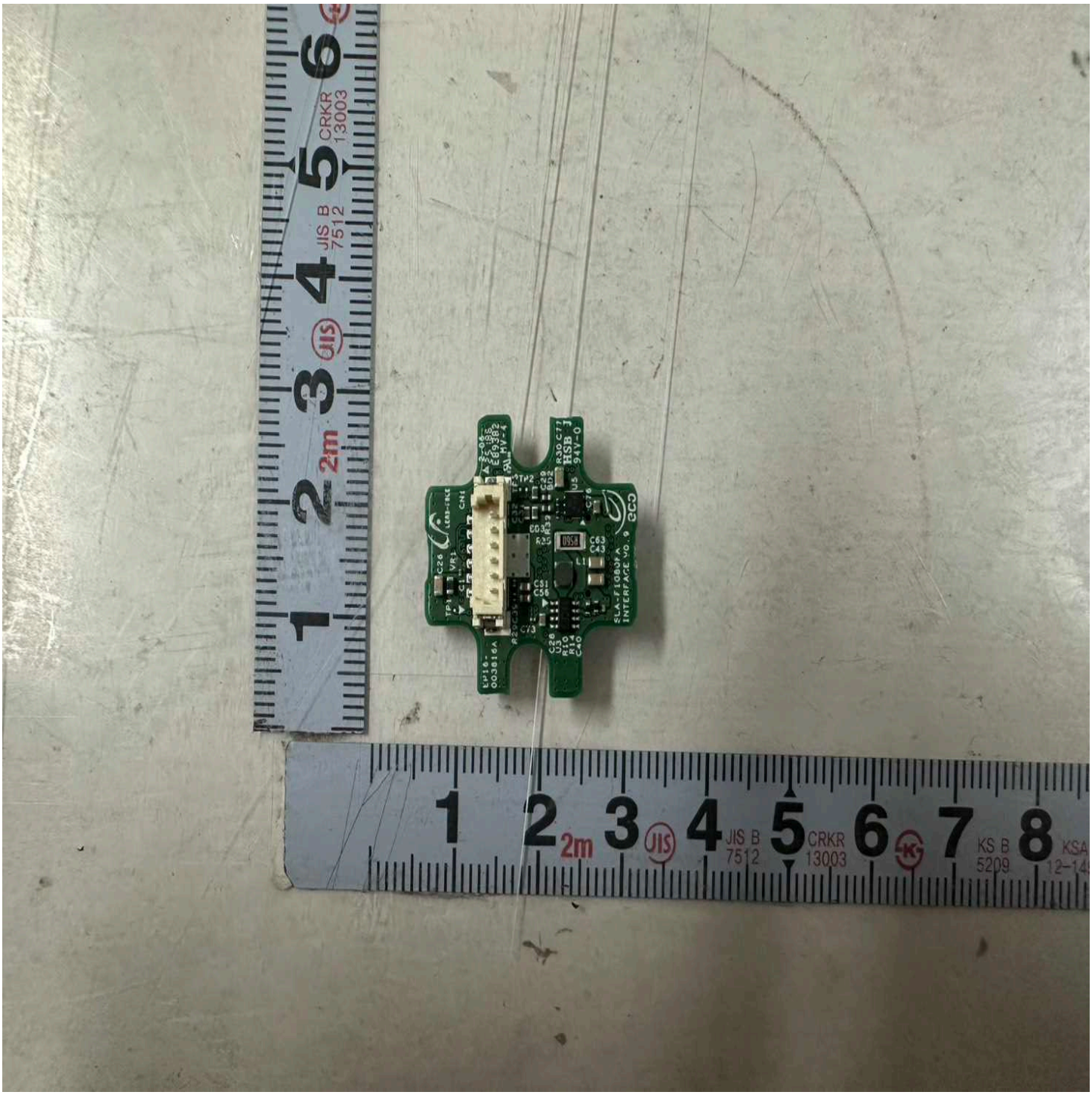

Photographs-04 Page-2

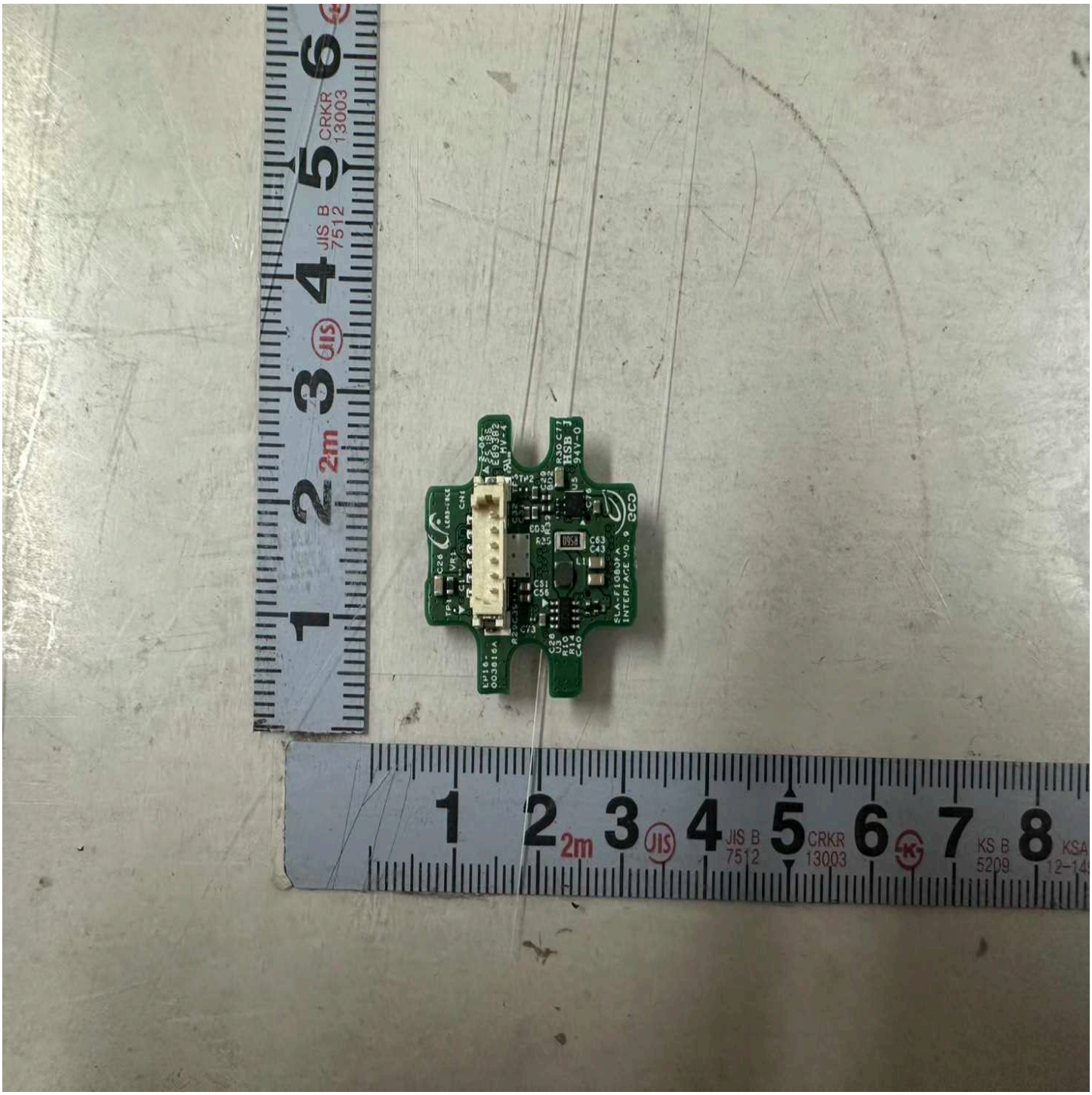

Photographs-05 Page-1

Photographs-05 Page-2