

SLA-T4680

2M Lens Module

Key Features

- Compatible with XNB-6001
- Max. 2M (1920 x 1080) resolution
- 0.06 Lux@F2.5
- 4.6mm pinhole lens

Design and specifications are subject to change without notice. The latest product information / specification can be found at HanwhaVision.com
Hanwha Vision is formerly known as Hanwha Techwin.

© Hanwha Vision CO., LTD. All rights reserved.

SLA-T4680

2M Lens Module



Specifications

Video

Imaging Device	Size	1/2.8"
	Type	CMOS
Effective Pixels		1,945(H)x1,109(V) 2.16M
Min. Illumination (Lux)	Color(1/30sec, 30IRE)	0.06
	BW(1/30sec, 30IRE)	0.06

Lens

Focal Length (mm)		4.6
Max. Aperture Ratio (F number)	Wide	2.5
Angular Field of View	Horizontal	73°
	Vertical	39°
	Diagonal	85°
Mount Type		RJ12 connected with main unit
Focus Control		Fixed

Environmental & Electrical

Operating Condition	Temperature	-10°C ~ +55°C (+14°F ~ +131°F)
	Humidity	Less than 90% RH
Storage Condition	Temperature	-50°C~+60°C(-58°F~+140°F)
	Humidity	Less than 90% RH

Mechanical

Color	Black
Material	Plastic
Product Dimensions	ø24x42mm(ø0.94"x1.65")
Product Weight	310g (0.68 lb)

Design and specifications are subject to change without notice. The latest product information / specification can be found at HanwhaVision.com
Hanwha Vision is formerly known as Hanwha Techwin.

© Hanwha Vision CO., LTD. All rights reserved.

SLA-T4680

2M Lens Module



CAD

Unit: mm [inch]

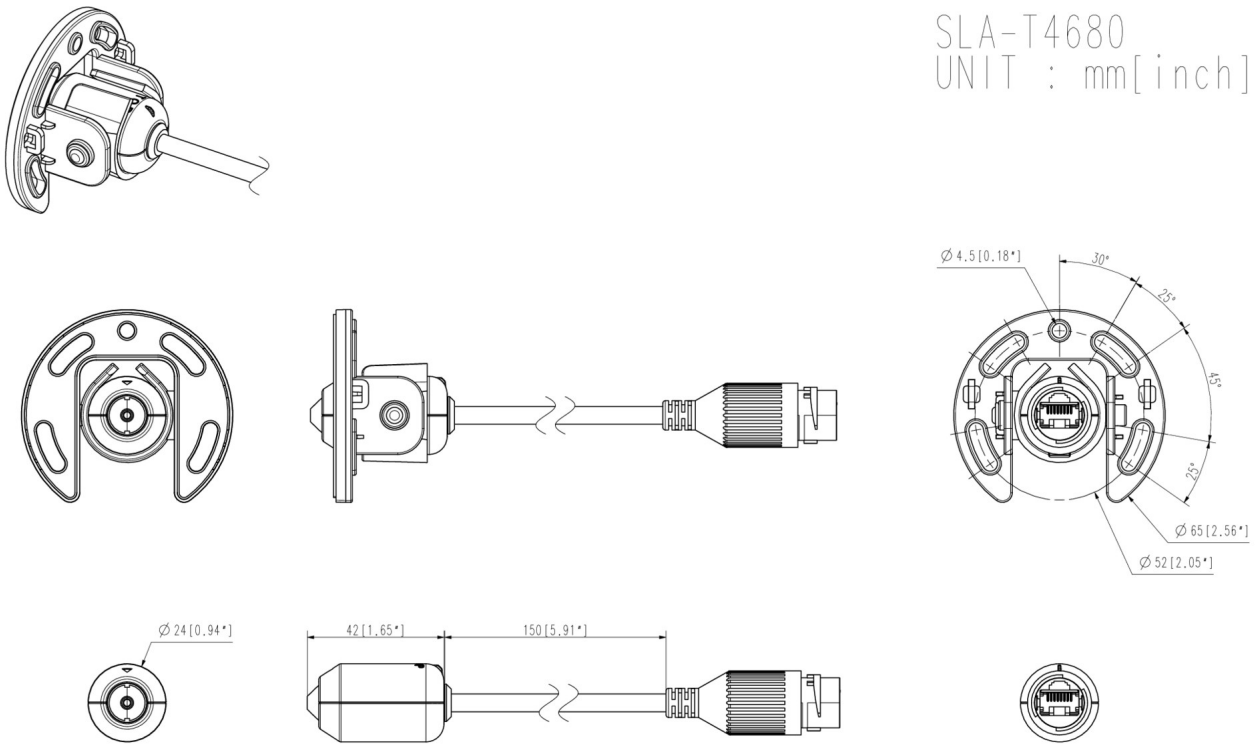

Design and specifications are subject to change without notice. The latest product information / specification can be found at HanwhaVision.com
Hanwha Vision is formerly known as Hanwha Techwin.

© Hanwha Vision CO., LTD. All rights reserved.