SLA-T4680A

2M-Objektivmodul

Key Features

- Sensor 1/2.8" 2M CMOS
- Auflösung 1945 x 1097
- 0,06 Lux (F2.5, 1/30 Sek.)
- 4,6 mm Festobjektiv
- Kompatibel mit PNM-9000QB
- Kompatibles Kabel für Objektivmodul: SCL-150 (15 m)

Design and specifications are subject to change without notice. The latest product information / specification can be found at HanwhaVision.com
Hanwha Vision is formerly known as Hanwha Techwin.

© Hanwha Vision CO., LTD. All rights reserved.

SLA-T4680A

2M-Objektivmodul

Specifications

Video

Bildgebungsgerät	Größe	1/2.8"
	Typ	CMOS
Min. Beleuchtung (Lux)	Farbe (1/30 Sekunde, 30 IRE)	0.06
	S/W (1/30 Sekunde, 30 IRE)	0.06

Linse

Brennweite (mm)		4.6
Max. Öffnungsverhältnis (F-Zahl)	Weit	2.5
	Tele	2.5
Winkel-Sichtfeld	Horizontal	73°
	Vertikal	39°
	Diagonal	85°
Halterungstyp		RJ12 connected with main unit
Fokussteuerung		Fixed

Umwelt & Elektrik

Betriebsbedingung	Temperatur	-10°C ~ +55°C (+14°F ~ +131°F)
	Luftfeuchtigkeit	Less than 90% RH
Lagerbedingung	Temperatur	-50°C~+60°C(-58°F~+140°F)
	Luftfeuchtigkeit	Less than 90% RH

Mechanisch

Farbe	Black
Material	Plastic
Produktabmessungen	Ø24xL49.8mm
Produktgewicht	310g
Supported Products	XNB-6002, PNM-9000QB, PNM-C20000QB, XNB-A8004B

Design and specifications are subject to change without notice. The latest product information / specification can be found at HanwhaVision.com
Hanwha Vision is formerly known as Hanwha Techwin.

© Hanwha Vision CO., LTD. All rights reserved.

SLA-T4680A

2M-Objektivmodul

CAD

Unit: mm [inch]

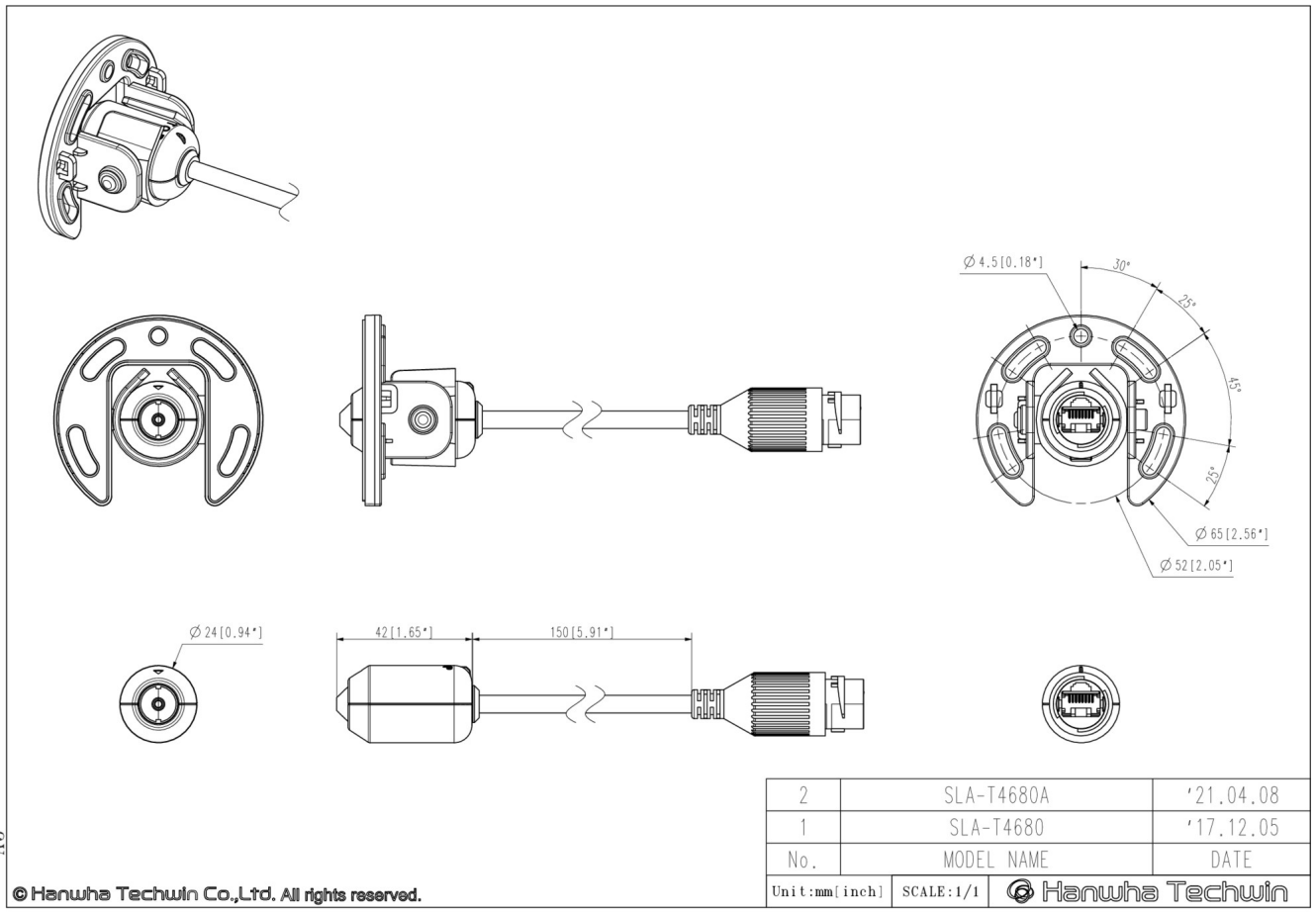

© Hanwha Vision CO., LTD. All rights reserved.

Compatible Devices

SBL-100D

SBL-101C

SCL-150

Design and specifications are subject to change without notice. The latest product information / specification can be found at HanwhaVision.com
Hanwha Vision is formerly known as Hanwha Techwin.

© Hanwha Vision CO., LTD. All rights reserved.