This parts should not contain any substances which are specified in AH60-0033K

NO	PART NAME	CODE NO	MATERIAL	Q'TY	REMARK
1	YTOT 6M 8mm-250521	EP14-001309	Check note	1	-

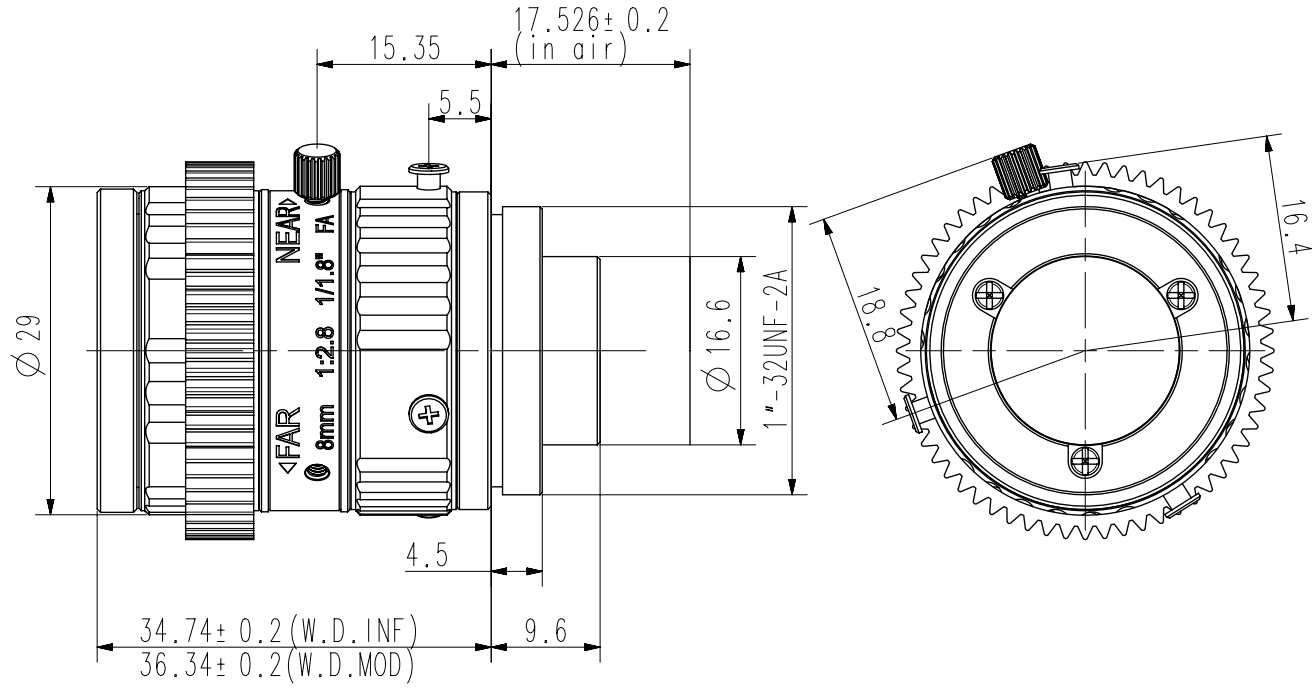

STANDARD TOLERANCE

DIV	Lvl 1	Lvl 2	Lvl 3	Lvl 4	Lvl 5
0-16	±0.05	±0.1	±0.1	±0.2	±0.3
16-63	±0.05	±0.1	±0.2	±0.3	±0.4
63-250	±0.1	±0.2	±0.3	±0.4	±0.4
250-1000	±0.2	±0.3	±0.4	±0.5	±0.6

CHANGE

△0 -1 Blank (19.03.01 X.X.X)

UNIT	mm	DESIGN	CHECK	APPROVAL	PART NAME	YTOT 6M 8mm-250521
SCALE	1/1	SY Choi	-	SH Lee	MODEL NAME	SLM-5M08
Hanwha Vision					CODE NO.	EP14-001309

A4