

SLM-5M16

16mm Objektiv für Mono BCR-Kameras

Key Features

- Auflösung: 3M~5M
- Brennweite: 16mm
- Max. Blende: F6
- Montagetyp: C-Mount
- Unterstützte Produkte: TNS-7000M

Design and specifications are subject to change without notice. The latest product information / specification can be found at HanwhaVision.com
Hanwha Vision is formerly known as Hanwha Techwin.

© Hanwha Vision CO., LTD. All rights reserved.

SLM-5M16

16mm Objektiv für Mono BCR-Kameras





Specifications

Video

Bildgebungsgerät	Größe	1/3.1"~1/1.8"
	Typ	CMOS
Auflösung		3M ~ 5M

Linse

Brennweite (mm)		16mm
Hintere Brennweite (mm)		9.97mm
Flansch-Brennweite hinten (mm)		17.526mm
Max. Öffnungsverhältnis (F-Zahl)	Weit	F6
Winkel-Sichtfeld	Horizontal	16.4° ~ 23.7°
	Vertikal	12.3° ~ 19.9°
	Diagonal	20.4° ~ 30.6°
Halterungstyp		C mount

Umwelt & Elektrik

Betriebsbedingung	Temperatur	-20°C~+60°C(-4°F~+140°F)

Mechanisch

Produktabmessungen	Ø29x48.8mm(L)
Produktgewicht	53.73g

Design and specifications are subject to change without notice. The latest product information / specification can be found at HanwhaVision.com
Hanwha Vision is formerly known as Hanwha Techwin.

© Hanwha Vision CO., LTD. All rights reserved.

SLM-5M16

16mm Objektiv für Mono BCR-Kameras





CAD

Unit: mm [inch]

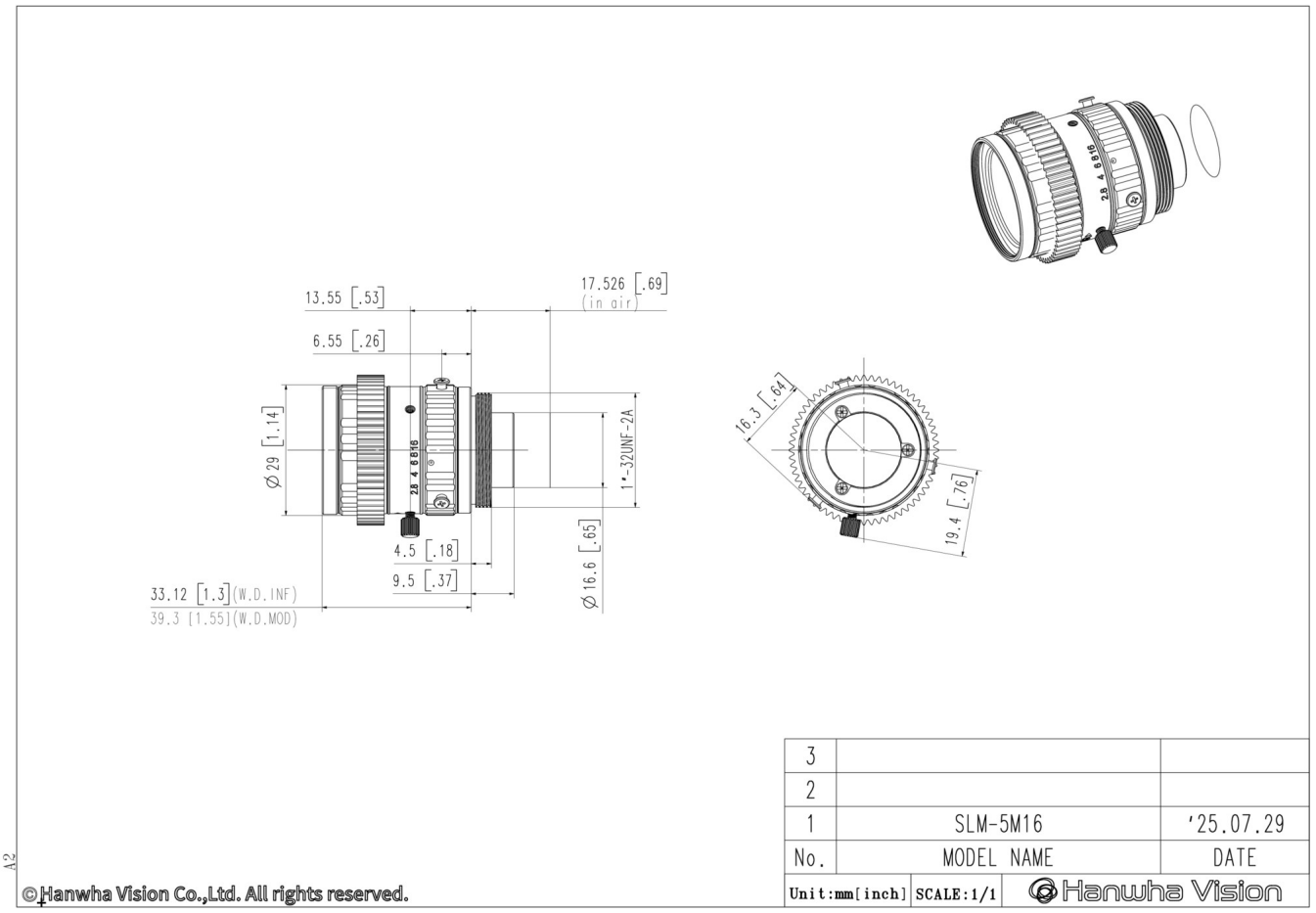

Design and specifications are subject to change without notice. The latest product information / specification can be found at HanwhaVision.com
Hanwha Vision is formerly known as Hanwha Techwin.

© Hanwha Vision CO., LTD. All rights reserved.