

SLM-5M16

Lente de 16mm para cámaras Mono BCR

Key Features

- Resolución: 3M~5M
- Longitud focal: 16mm
- Apertura máxima: F6
- Tipo de montura: C mount
- Productos compatibles: TNS-7000M

Design and specifications are subject to change without notice. The latest product information / specification can be found at HanwhaVision.com
Hanwha Vision is formerly known as Hanwha Techwin.

© Hanwha Vision CO., LTD. All rights reserved.

SLM-5M16

Lente de 16mm para cámaras Mono BCR





Specifications

Vídeo

Dispositivo de imagen	Tamaño	1/3.1"~1/1.8"
	Tipo	CMOS
Resolución		3M ~ 5M

Objetivo

Longitud focal (mm)		16mm
Distancia focal posterior (mm)		9.97mm
Distancia focal brida posterior (mm)		17.526mm
Máx. Relación de apertura (número F)	Gran angular	F6
Campo de visión angular	Horizontal	16.4° ~ 23.7°
	Vertical	12.3° ~ 19.9°
	Diagonal	20.4° ~ 30.6°
Tipo de montura		C mount

Medioambiental y eléctrico

Condición de funcionamiento	Temperaturas	-20°C~+60°C(-4°F~+140°F)

Mecánico

Dimensiones del producto	Ø29x48.8mm(L)
Peso del producto	53.73g

Design and specifications are subject to change without notice. The latest product information / specification can be found at HanwhaVision.com
Hanwha Vision is formerly known as Hanwha Techwin.

© Hanwha Vision CO., LTD. All rights reserved.

SLM-5M16

Lente de 16mm para cámaras Mono BCR





CAD

Unit: mm [inch]

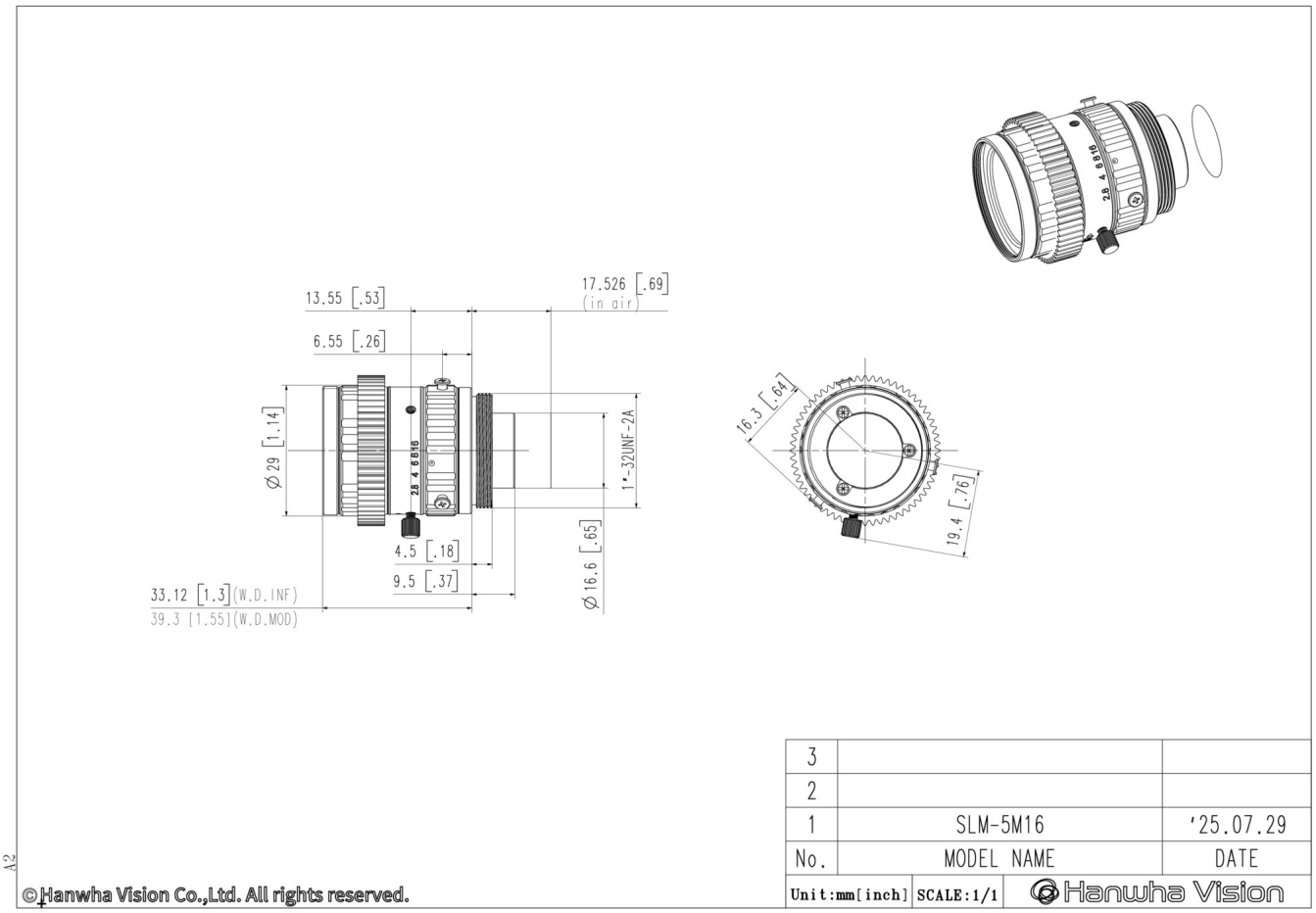

Design and specifications are subject to change without notice. The latest product information / specification can be found at HanwhaVision.com
Hanwha Vision is formerly known as Hanwha Techwin.

© Hanwha Vision CO., LTD. All rights reserved.