

SLM-5M16

Objectif 16mm pour caméras Mono BCR

Key Features

- Résolution : 3M~5M
- Longueur focale : 16mm
- Ouverture maximale : F6
- Type de monture : monture C
- Produits pris en charge : TNS-7000M

Design and specifications are subject to change without notice. The latest product information / specification can be found at HanwhaVision.com
Hanwha Vision is formerly known as Hanwha Techwin.

© Hanwha Vision CO., LTD. All rights reserved.

SLM-5M16

Objectif 16mm pour caméras Mono BCR







Specifications

Vidéo

Capteur	Taille	1/3.1"~1/1.8"
	Type	CMOS
Résolution		3M ~ 5M

Objectif

Distance focale (mm)		16mm
Distance focale arrière (mm)		9.97mm
Distance focale arrière à la bride (mm)		17.526mm
Max. Rapport d'ouverture (nombre F)	Grand angle	F6
Champ de vision angulaire	Horizontal	16.4° ~ 23.7°
	Vertical	12.3° ~ 19.9°
	Diagonale	20.4° ~ 30.6°
Type de monture		Monture C

Environnement et électricité

Conditions de fonctionnement	Température	-20°C~+60°C(-4°F~+140°F)

Mécanique

Dimensions du produit	Ø29x48.8mm(L)
Poids du produit	53.73g

Design and specifications are subject to change without notice. The latest product information / specification can be found at HanwhaVision.com
Hanwha Vision is formerly known as Hanwha Techwin.

© Hanwha Vision CO., LTD. All rights reserved.

SLM-5M16

Objectif 16mm pour caméras Mono BCR





CAD

Unit: mm [inch]

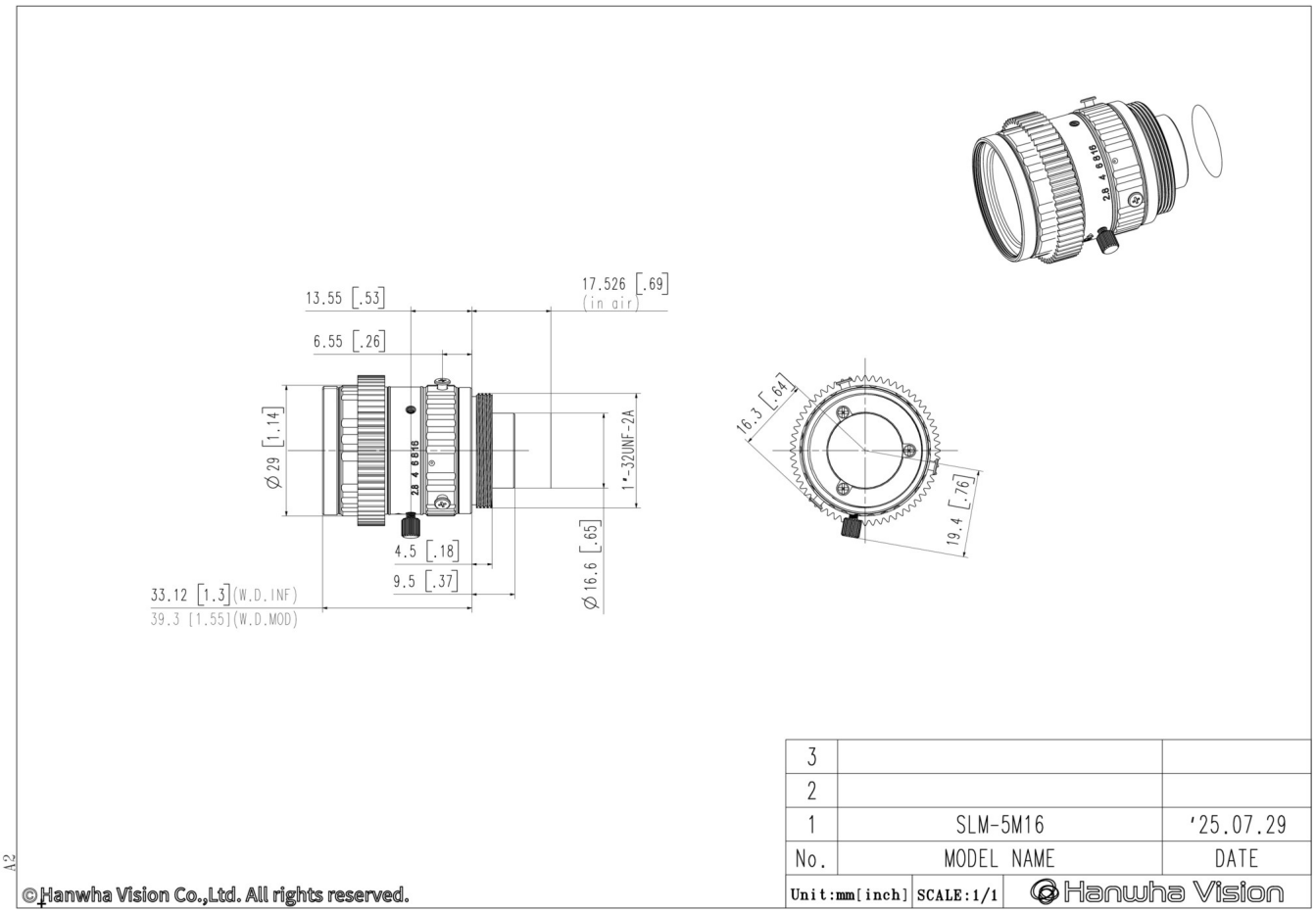

Design and specifications are subject to change without notice. The latest product information / specification can be found at HanwhaVision.com
Hanwha Vision is formerly known as Hanwha Techwin.

© Hanwha Vision CO., LTD. All rights reserved.