

SLM-5M16

Lens

Key Features

16mm lens for Mono BCR Cameras

Design and specifications are subject to change without notice. The latest product information / specification can be found at HanwhaVision.com
Hanwha Vision is formerly known as Hanwha Techwin.

© Hanwha Vision CO., LTD. All rights reserved.

SLM-5M16

Lens





Specifications

Video

Imaging Device	Size	1/3.1"~1/1.8"
	Type	CMOS
Resolution		3M ~ 5M

Lens

Focal Length (mm)		16mm
Back Focal Length (mm)		9.97mm
Flange Back Focal Length (mm)		17.526mm
Max. Aperture Ratio (F number)	Wide	F6
Angular Field of View	Horizontal	16.4° ~ 23.7°
	Vertical	12.3° ~ 19.9°
	Diagonal	20.4° ~ 30.6°
Mount Type		C mount

Environmental & Electrical

Operating Condition	Temperature	-20°C~+60°C(-4°F~+140°F)

Mechanical

Product Dimensions	Ø29x48.8mm(L)
Product Weight	53.73g

Design and specifications are subject to change without notice. The latest product information / specification can be found at HanwhaVision.com
Hanwha Vision is formerly known as Hanwha Techwin.

© Hanwha Vision CO., LTD. All rights reserved.

SLM-5M16

Lens





CAD

Unit: mm [inch]

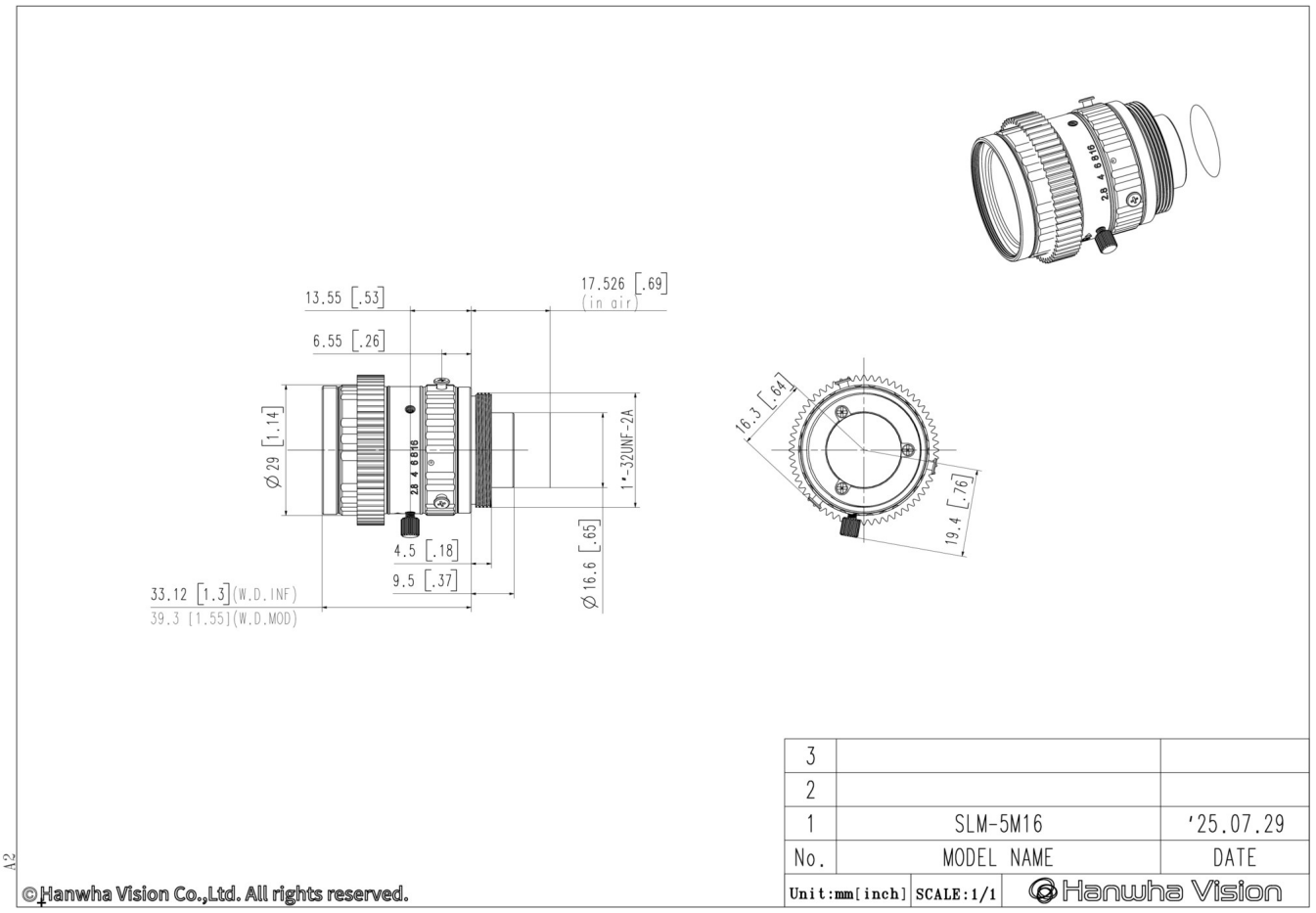

Design and specifications are subject to change without notice. The latest product information / specification can be found at HanwhaVision.com
Hanwha Vision is formerly known as Hanwha Techwin.

© Hanwha Vision CO., LTD. All rights reserved.