UL TEST REPORT AND PROCEDURE

Standard:	UL 62368-1, 3rd Ed, 2021-10-22 (Audio/video, information and communication technology equipment Part 1: Safety requirements) CAN/CSA C22.2 No. 62368-1:19, 3rd Ed, 2021-10-22 (Audio/video, information and communication technology equipment Part 1: Safety requirements)
Certification Type:	Listing
CCN:	AZOT, AZOT7 (Audio/video, Information and Communication Technology Equipment)
Complementary CCN:	N/A
Product:	Security LED Monitor
Model:	SMT-43******(*=a-z, A-Z, 0-9 ,- , / ,\ or blank)
Rating:	100-240Vac, 50/60Hz, 1.0A
Applicant Name and Address:	WEIHAI DAEWOO ELECTRONICS CO LTD ECONOMIC & TECHNICAL DEVELOPMENT ZONE 26 HONGKONG RD WEIHAI SHANDONG 264205 CHINA

This is to certify that representative samples of the products covered by this Test Report have been investigated in accordance with the above referenced Standards. The products have been found to comply with the requirements covering the category and the products are judged to be eligible for Follow-Up Service under the indicated Test Procedure. The manufacturer is authorized to use the UL Mark on such products which comply with this Test Report and any other applicable requirements of UL LLC ('UL') in accordance with the Follow-Up Service Agreement. Only those products which properly bear the UL Mark are considered as being covered by UL's Follow-Up Service under the indicated Test Procedure.

The applicant is authorized to reproduce the referenced Test Report provided it is reproduced in its entirety.

UL authorizes the applicant to reproduce the latest pages of the referenced Test Report consisting of the first page of the Specific Technical Criteria through to the end of the Conditions of Acceptability.

Any information and documentation involving UL Mark services are provided on behalf of UL LLC (UL) or any authorized licensee of UL.

Prepared By: Shirley Yang / Project Handler Reviewed By: Coco Zhu / Reviewer

Copyright © 2019

Supporting Documentation

The following documents located at the beginning of this Procedure supplement the requirements of this Test Report:

A. Authorization - The Authorization page may include additional Factory Identification Code markings.

B. Generic Inspection Instructions -

i. Part AC details important information which may be applicable to products covered by this Procedure. Products described in this Test Report must comply with any applicable items listed unless otherwise stated in the body of this Test Report.

ii. Part AE details any requirements which may be applicable to all products covered by this Procedure. Products described in this Test Report must comply with any applicable items listed unless otherwise stated in the body of each Test Report.

iii. Part AF details the requirements for the UL Certification Mark which is not controlled by the technical standard used to investigate these products. Products are permitted to bear only the Certification Mark(s) corresponding to the countries for which it is certified, as indicated in each Test Report.

Product Description

The equipment under tests is a 43 inch LED Monitor with internal non-certified power supply for use in general office environment. The built-in power supply models WDL3353C09 is non-approved component, which was manufactured by Qingdao Ticon Electronics Co.,Ltd. see appended table 4.1.2 for the detail information. And wall-Mounting evaluated.

The unit has the following features:

1. The internal metal chassis which covering building-in switching power supply.
2. The external plastic enclosure is regarded as fire enclosure, electrical enclosure, mechanical enclosure.
3. The unit is configured with TFT-LCD panel (with LED backlight).
4. The unit is configured with DP port, HDMI port.

Model Differences

N/A

Test Item Particulars

Product group ..... :	end product
Classification of use by ..... :	Ordinary person Children likely to be present
Supply Connection ..... :	AC Mains
Supply tolerance ..... :	+10%/-10%
Supply connection – type ..... :	pluggable equipment type A - appliance coupler
Considered current rating of protective device .... :	20 for USA and Canada, 16 for most countries A; Location: building
Equipment mobility ..... :	movable wall/ceiling-mounted
Over voltage category (OVC) ..... :	OVC II
Class of equipment ..... :	Class I
Special installation location ..... :	N/A
Pollution degree (PD) ..... :	PD 2
Manufacturer's specified Tma (°C) ..... :	40

IP protection class .....: IPX0
Power systems .....: TN
Altitude during operation (m) .....: 2000 m or less
Altitude of test laboratory (m) .....: 2000 m or less
Mass of equipment (kg) .....: Display:8.31kg
Bracket: 2.49kg

Technical Considerations

- The product was submitted and evaluated for use at the maximum ambient temperature (Tma) permitted by the manufacturer's specification of : 40°C
- The product is intended for use on the following power systems : TN
- Considered current rating of protective device as part of the building installation (A) : 20 for USA and Canada, 16 for most countries
- Mains supply tolerance (%) or absolute mains supply : +10%/-10% .
- The equipment disconnect device is considered to be : Appliance inlet
- The following circuit locations (with circuit/schematic designation) were investigated as a limited power source (LPS) : All output terminals
- The Risk Group of a lamp or lamp system (including LEDs) is : Exempt
- The following are available from the Applicant upon request : Installation (Safety) Instructions / Manual.

Additional Information

N/A

Additional Standards

The product fulfills the requirements of: AS/NZS 62368.1:2022;
EN IEC 62368-1:2020+A11:2020;
CSA/UL 62368-1:2019

Markings and Instructions

Clause Title	Marking or Instruction Details
Equipment identification marking – Manufacturer identification	Listee's or Recognized Company's name, Trade Name, Trademark or File Number
Equipment identification marking – model identification	Model Number
Equipment rating marking – ratings	"Input Ratings (voltage, frequency/dc, current/power)", "Output Ratings (voltage, frequency/dc, current/power)"
Fuses – replaceable by skilled person	(component ID: F1), T2A L/ 250V, and (symbol of required characteristics) located on or adjacent to fuse or fuseholder or in service manual.
DVK 6.5 Inter-connecting cables - External detachable (Optional)	Listees Name and Part number (Marking or Instruction)

Special Instructions to UL Representative

For transformer test - When the tests are conducted at other location, inspect test record and specification sheet provided by the component manufacturer. Verify the specification sheet indicates 100% routine test specified in Production-Line Testing Requirements be conducted at the component manufacturer.

BD1.0	**TABLE: Production-Line Testing Requirements**					
BD1.1	**Electric Strength Test Special Constructions – Refer to Generic Inspection Instructions, Part AC for further information.**					
Model	Component	Removable parts	Test probe location	Test V rms	Test V dc	Test Time, s
All models	Transformer (T1)	--	Primary to secondary	1500	2100	1
BD1.2	**Earthing Continuity Test Exemptions – This test is not required for the following models:**					
	All models					
BD1.3	**Electric Strength Test Exemptions – This test is not required for the following models:**					
	All models					
BD1.4	**Electric Strength Test Component Exemptions – The following solid-state components may be disconnected from the remainder of the circuitry during the performance of this test.**					
	N/A					

BE1.0	**Sample and Test Specifics for Follow-Up Tests at UL**				
Model	Component	Material	Test	Sample (s)	Test Specifics
--	--	--	--	--	--

4.1.2	**TABLE: List of critical components**					**Pass**
Object / part No.	Manufacturer/ trademark	Type / model	Technical data	Product Category CCN(s)	Mark(s) of conformity	Supplement ID
01. Label	Interchangeable	Interchangeable	Minimum 60 degree C, suitable for affixed material.	PGDQ2 or PGJI2	UL	
02. Internal Wirings (Secondary Circuits)	Interchangeable	Interchangeable	Marked or rated VW-1, min. 30 V, min. 60 degree C, routed away from primary un-insulated live parts and primary circuit wiring.	AVLV2	UL	
03. Insulating Tubing/Sleeving	Interchangeable	Interchangeable	Marked or rated VW-1, min. 105 degree C, min. 300 V.	YDPU2	UL	
04. Connectors and Receptacles (Secondary Circuits)	Interchangeable	Metal/Plastic	Copper alloy pins housed in bodies of plastic rated min. V-2.	QMFZ2	UL	
04a. Connectors and Receptacles (Secondary Circuits) (Alternate)	Interchangeable	Interchangeable	--	ECBT2	UL	
05. Internal Plastic Part Materials	Interchangeable	Interchangeable	Rated min. V-2.	QMFZ2	UL	
06. Interconnecting Cable (Optional) (Detachable)	Interchangeable	Interchangeable	Min. 30V, 60 degree C, maximum 3.05m long, suitable for external use. Marked VW-1 or better.	AVLV2	UL	
06a. Interconnecting Cable, (Optional) (Detachable) (Alternate)	Interchangeable	Interchangeable	Suitable for external use. Type CMP, CMR, CMG, or CM. For type CMX, or CMUC, maximum 3.05m long.	DUZX	UL	

07. Power Supply Cord (Optional)	Interchangeable	Interchangeable	Detachable, Type SVT, SPT-2 or NISPT-2, min. 250 Vac, min. 18 AWG, min. 1.5 m and max. 2.4 m long, one end with grounding type NEMA 5-15P, the other end with appliance coupler.	ZJCZ and RTRT and AXUT or ELBZ	UL	
07a. Power Supply Cord (Optional)(alternate)	Interchangeable	Interchangeable	Detachable, Type SVT or NISPT-2, min. 250 Vac, min. 18 AWG, min. 1.5 m and max. 2.4 m long, marked VW-1, one end with grounding type NEMA 6-15P, the other end with appliance coupler.	ELBZ	UL	
08. Printed Wiring Boards	Interchangeable	Interchangeable	Rated V-0, 105 degree C.	ZPMV2	UL	
10. LCD Panel with LED backlight	SHENZHEN TONGLIANGCAI PHOTO ELECTRIC TECHNOLOGY CO.,LTD.	DW430E	43 inch, TFT LCD Module.	--	--	
11. Plastic enclosure-frame part and back cover	CHI MEI CORPORATION	PA-757(+)	ABS, 80°C, HB min. 2.0mm	QMFZ2	UL(E56070)	
11a. Plastic enclosure-frame part and back cover(Alternate)	FORMOSA CHEMICALS & FIBRE CORP PLASTICS DIV	AG15AB	HIPS, 80℃, -35℃. min. 2.0mm	QMFZ2	UL(E162823)	
11-01. Metal enclosure	--	--	Metal Min 0.8mm thickness.	--	--	

11-01a. Metal enclosure on alt structure (Alternate)	--	--	Metal Min 0.4mm thickness, 291.1*26.5*225.2mm.	--	--	
12. Mylar sheet (under power board)	Sichuan dongfang insulating material co.,ltd	DFR116ECOB	V-0, min. 0.40mm thickness.	QMFZ2	UL (E199019)	
12a. Mylar sheet (below power board on alt metal enclosure)	Sichuan dongfang insulating material co.,ltd	DFR116ECOB	V-0, min. 0.40mm thickness.	QMFZ2	UL (E199019)	
13. Power Board	Qingdao Ticon Electronics Co., Ltd	WDL3353C09	Input: 100-240Vac, 50/60Hz Output: 5Vdc/12Vdc.	--	--	
13-01. AC-Inlet (CN1)	Yueqing yanhui electronic co ltd	DB-14	250Vac, 15A, Configuration C14.	AXUT2	UL (E334847)	
13-01a. AC-Inlet (CN1) (Alternate)	LECI Electronics Co., LTD	DB-14	250Vac, 15A. (UL); 10A,250Vac (VDE), 70℃.	AXUT2	UL (E302229)	
13-02. Fuse (F1)	Conquer Electronics Co., Ltd.	MST	T3.15A, AC 250V, standard sheet 4.	JDYX2	UL (E82636)	
13-02a. Fuse (F1) (Alternate)	Littelfuse Inc.	392	T3.15A, AC 250V, standard sheet 4.	JDYX2	UL	
13-02b. Fuse (F1) (Alternate)	Interchangeable	Interchangeable	T3.15A, AC 250V, standard sheet 4.	JDYX	UL	
13-03. NTC (TH101)	Interchangeable	Interchangeable	NTC 5D20, rated 5Ω at 25 degree C.	--	--	
13-04. Bleeder resistors (R101,R102,R103,R104,R105,R106)	Interchangeable	Interchangeable	Max.2MΩ, Min.1/4W.	--	--	
13-05. X2-capacitor (CX101)	COWELL FASHION CO LTD	PCX2 337	0.22uF,	FOWX2	UL (E165646)	

			Min.275Vac,X2 type, min.110℃			
13-05a. X2-capacitor (CX101)-(Alternate)	Nantong City Haimen Yinyan Electronic Co.,Ltd	MKPX2	0.22uF, Min.275Vac,X2 type, min.100℃	FOWX2	UL (E354597)	
13-06. BD101	Interchangeable	Interchangeable	800V/10A	--	--	
13-07. Filter (LF101&LF102)	Qingdao taikong electric co.,ltd.	TKSQ1918-10mH	Min. 130 degree C, see 04-04 for dimension details.	--	--	
13-07-01. Filter (LF101&LF102) - core	Interchangeable	Interchangeable	FEERITE	--	--	
13-07-02. Filter (LF101&LF102) - Wire	Interchangeable	Interchangeable	Min. 130 degree C	OBWM2	UL	
13-07-03. Filter (LF101&LF102) - bobbin	Interchangeable	Interchangeable	Phenolic, Min. 130 degree C	QMFZ2	UL	
13-07-04. Filter (LF101&LF102) - varnish	ZHUHAI CHANGXIAN NEW MATERIALS TECHNOLOGY CO LTD	E962	Min. 130 degree C	OBOR2	UL	
13-08. Electrolytic Capacitor (C101)	Interchangeable	Interchangeable	Min.105 degree C, Min.450V, Max.82uF	--	--	
13-09. MOSFET (Q101)	Interchangeable	Interchangeable	Min 650V, 10A	--	--	
13-10. Printed Wiring Boards	Interchangeable	Interchangeable	V-0, 130 degree C.	ZPMV2	UL	
13-11. Y1-Capacitor (CY1, CY2, CY3)	Yinan Don's Electronic Component Co.,Ltd.	CT81	CY1 =470pF, CY2=470pF,	FOWX2	UL (E145038)	

			CY3=2.2nF, AC 250V min., 125°C, Y1 Type			
13-11a. Y1-Capacitor (CY1, CY2, CY3)-(Alternate)	Xiamen Sino Faith Electronic Technology Co., Ltd.	HCY	CY1 =470pF, CY2=1nF, CY3=2.2nF, AC 250V min., 125°C, Y1 Type	FOWX2	UL (E328673)	
13-12. Photocoupler (OP1)	LITE-ON Technology Corporation	LTV-817	115°C, reinforced insulation, 5300V	FPQU2	UL (E113898)	
13-12a. Photocoupler (OP1)-(Alternate)	Changzhou Galaxy Century Micro-Electronics Co., Ltd.	BL817	100°C, reinforced insulation, 5000V.	FPQU2	UL (E340048)	
13-13. Transformer (T1)	DEZHOU SANHE ELECTRONIC CO. LTD	EE42-1	See Enclosure 04-05 for details.	--	--	
13-13-01. Insulation system of Transformer (T1)	DEZHOU SANHE ELECTRIC CO LTD	SH130B	Class B Insulation System	OBJY2	UL	
13-13-02. Transformer (T1)-Core	Interchangeable	Interchangeable	Ferrite	--	--	
13-13-03. Transformer (T1)-Bobbin	SUMITOMO BAKELITE CO.,LTD	PM-9820	V-0, 150 degree C, Phenolic	QMFZ2	UL	
13-13-04. Transformer (T1)-insulation tape	JINGJIANG YAHUA PRESSURE SENSITIVE GLUE CO LTD	CT* (c)(g)	130 degree C	OANZ2	UL	
13-13-05. Transformer (T1)-WIRE	Interchangeable	Interchangeable	130 degree C, MW75-C	OBMW2	UL	
13-13-05a. Transformer (T1)-WIRE(alternate)	Interchangeable	Interchangeable	155 degree C, MW79-C	OBMW2	UL	

13-13-06. Transformer (T1)-TRIPLE INSULATED WIRE	FURUKAWAELECTRONIC CO LTD	TEX-E	130 degree C	OBJT2	UL	
13-13-06a. Transformer (T1)-Tube	CHANGYUAN ELECTRONICS GROUP CO LTD	CB-TT-L	200 degree C	YDPU2	UL	
13-13-07. Transformer (T1)-VARNISH	SUZHOU TAIHU ELECTRONIC ADVANCED MATERIAL CO LTD	T-4260(a)	130 degree C	OBOR2	UL	
13-14. Protective Bonding Wiring	Interchangeable	Interchangeable	Green/Yellow, minimum 18AWG, one end mechanically secured then soldered to earthing terminal of inlet, the other end connected with metal ring terminal and secured to enclosure by metal stand, star washer and screw (min 3.5mm).	AVLV2	UL	
13-15. Heat-shrink tube	Interchangeable	Interchangeable	VW-1, 125 Degree C, 600V	UZFT2, YDPU2, YDTU2	UL	
13-16. Current Sensor resistor	Interchangeable	Interchangeable	Max.0.47Ω, Min.2W	--	--	
13-17. Filter (L103&L104)	Qingdao taikong electric co.,ltd.	EQ25-1	Min. 130 degree C, see 04-12 for dimension details.	--	--	
13-17. Filter (L103&L104) -core	Interchangeable	Interchangeable	FEERITE	--	--	
13-17. Filter (L103&L104) -Wire	Interchangeable	Interchangeable	Min. 130 degree C	OBWM2	UL	

13-17. Filter (L103&L104) - bobbin	Interchangeable	Interchangeable	Phenolic, Min. 130 degree C	QMFZ2	UL	
13-17. Filter (L103&L104) - varnish	KYOCERA Corporation	TVB2180T*(a)	Min. 155 degree C	OBOR2	UL	
14. Internal tape and Glue	Interchangeable	Interchangeable	Less than 4g	--	--	
15. Adhesive for aluminium foil pasted around internal metal chassis (CN2,CN3, CN4 Port)	Kunshan Rich&Crown Eleltronic Materials CO.,LTD	FAP-3875	120 degree C, refer to enclosure 03-14 for details.	--	Test with equipment, comply with P.4.2	
16. Base (Optional)	Interchangeable	Interchangeable	HB or better	QMFZ2	UL	

Enclosures

Type	Supplement Id	Description
Photographs	03-01	Overall view-1
Photographs	03-02	Overall view-2
Photographs	03-03	Overall view-3
Photographs	03-04	Overall view-4
Photographs	03-05	Overall view-5
Photographs	03-09	Overall view-6
Photographs	03-10	Internal view-1
Photographs	03-11	Internal view-2
Photographs	03-12	Powerboard veiw 1
Photographs	03-13	Powerboard veiw 2
Photographs	03-14	Mainboard veiw 1
Photographs	03-15	Mainboard veiw 2
Photographs	03-16	Overall view-1 with alt structure
Photographs	03-17	Overall view-2 with alt structure
Photographs	03-18	Overall view-5 with alt structure
Photographs	03-19	Overall view-6 with alt structure
Photographs	03-20	Overall view-7 with alt structure
Photographs	03-21	Overall view-8 with alt structure
Photographs	03-22	Internal view-1 with alt structure
Photographs	03-23	Internal view-2 with alt structure
Photographs	03-24	Internal view-3 with alt structure
Photographs	03-25	Internal view-4 with alt structure
Diagrams	04-01	Dimension of product enclosure
Diagrams	04-02	Dimension of mylar (under power board on alt metal enclosure)
Diagrams	04-03	Dimension of mylar (cover power board)
Diagrams	04-04	Line chock spec LF101&LF102
Diagrams	04-05	Transformer Spec for EE42-1
Diagrams	04-12	Line chock spec L103&L104
Diagrams	04-13	Dimension of product enclosure with alt structure
Diagrams	04-14	Dimension of product enclosure opening with alt structure
Diagrams	04-15	Dimension of installation bracket with alt structure
Schematics + PWB	05-01	Power board layout-1
Schematics + PWB	05-02	Power board layout-2
Manuals	06-01	Install Manual
Manuals	06-02	Install Manual with alt structure

The following Page(s) are related to Diagrams-01. The next supplement, if applicable, will be identified with a new Supplement Page Heading.

PRODUCT OVERVIEW

Unit : mm

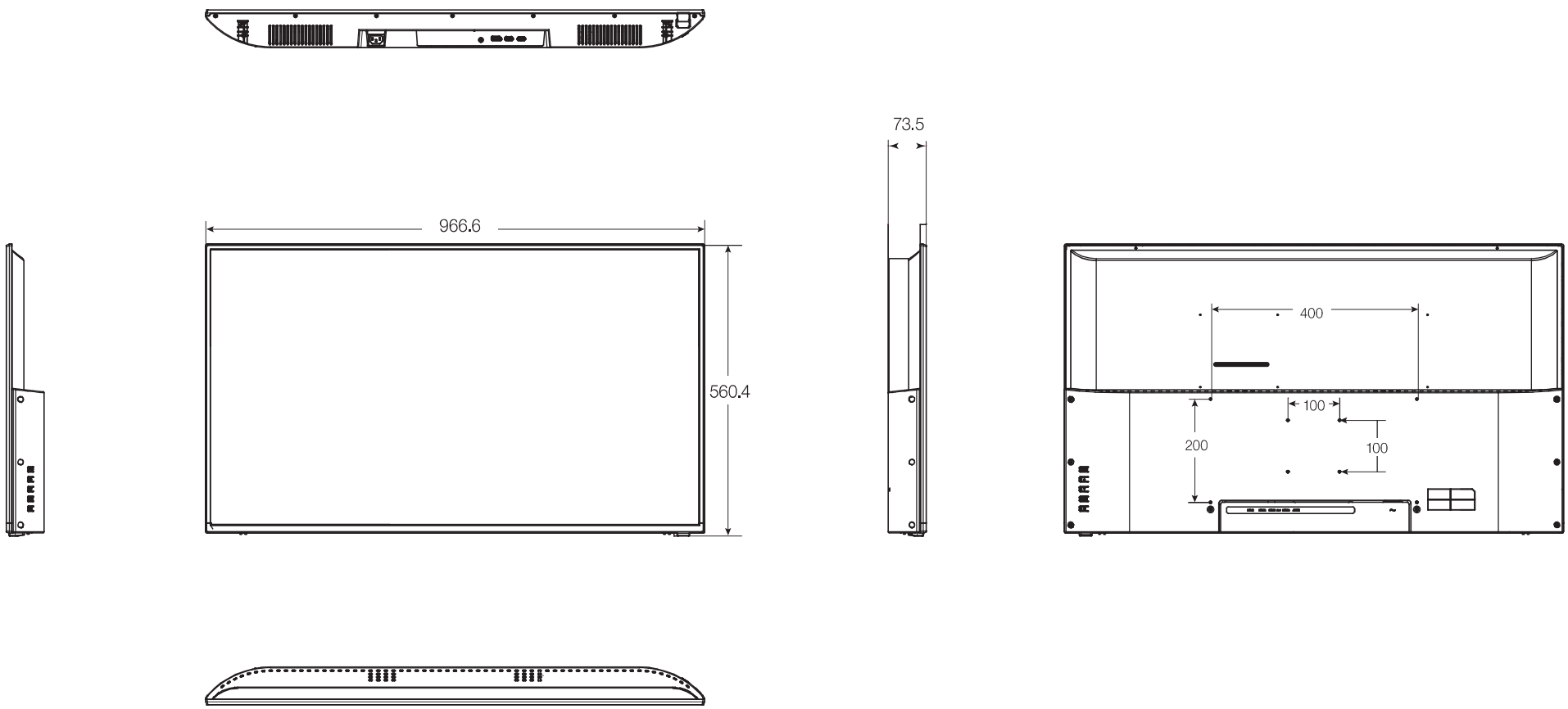

The following Page(s) are related to Diagrams-02. The next supplement, if applicable, will be identified with a new Supplement Page Heading.

名称	麦拉片	型 号		尺寸（长*宽*高）	140*100*0.43（mm）	新品/New：■ 变更/Change：□
		部品编号	G7MY1401004300			

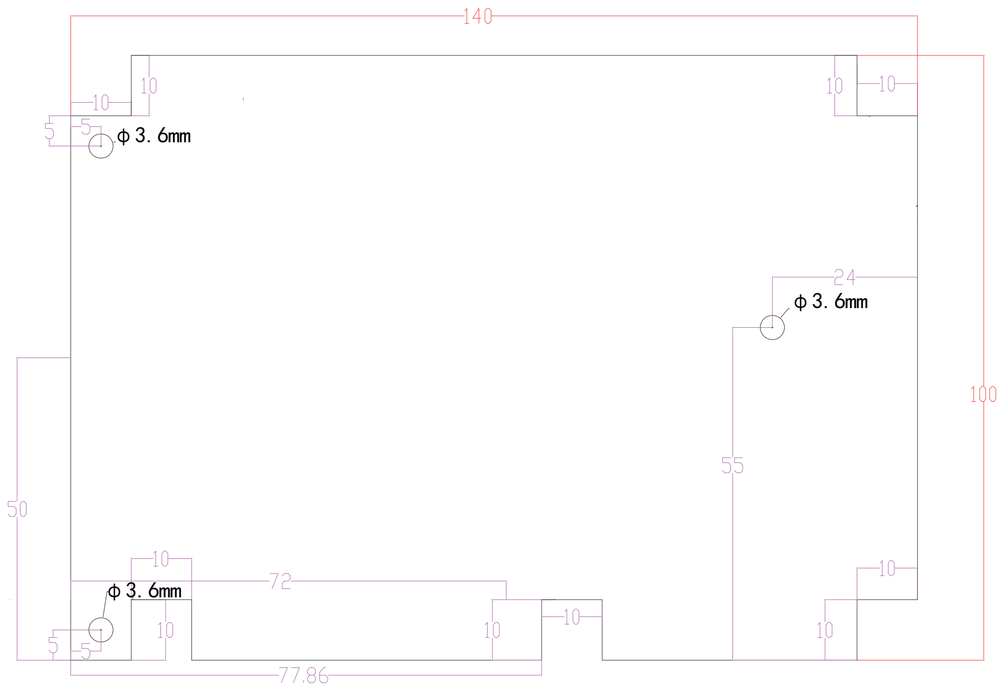

原材料说明/Material Explain：

1：黑色绝缘麦拉片；
2：V0阻燃

加工工艺说明/Process Explain：

1、雾面向上

注意事项/Note：

制图比例/Scale：1：1

设计/Designer： 于维海

制图人/Mapper：

制图日期/Drawn Date：

Sheet 1 Of 1

The following Page(s) are related to Diagrams-03. The next supplement, if applicable, will be identified with a new Supplement Page Heading.

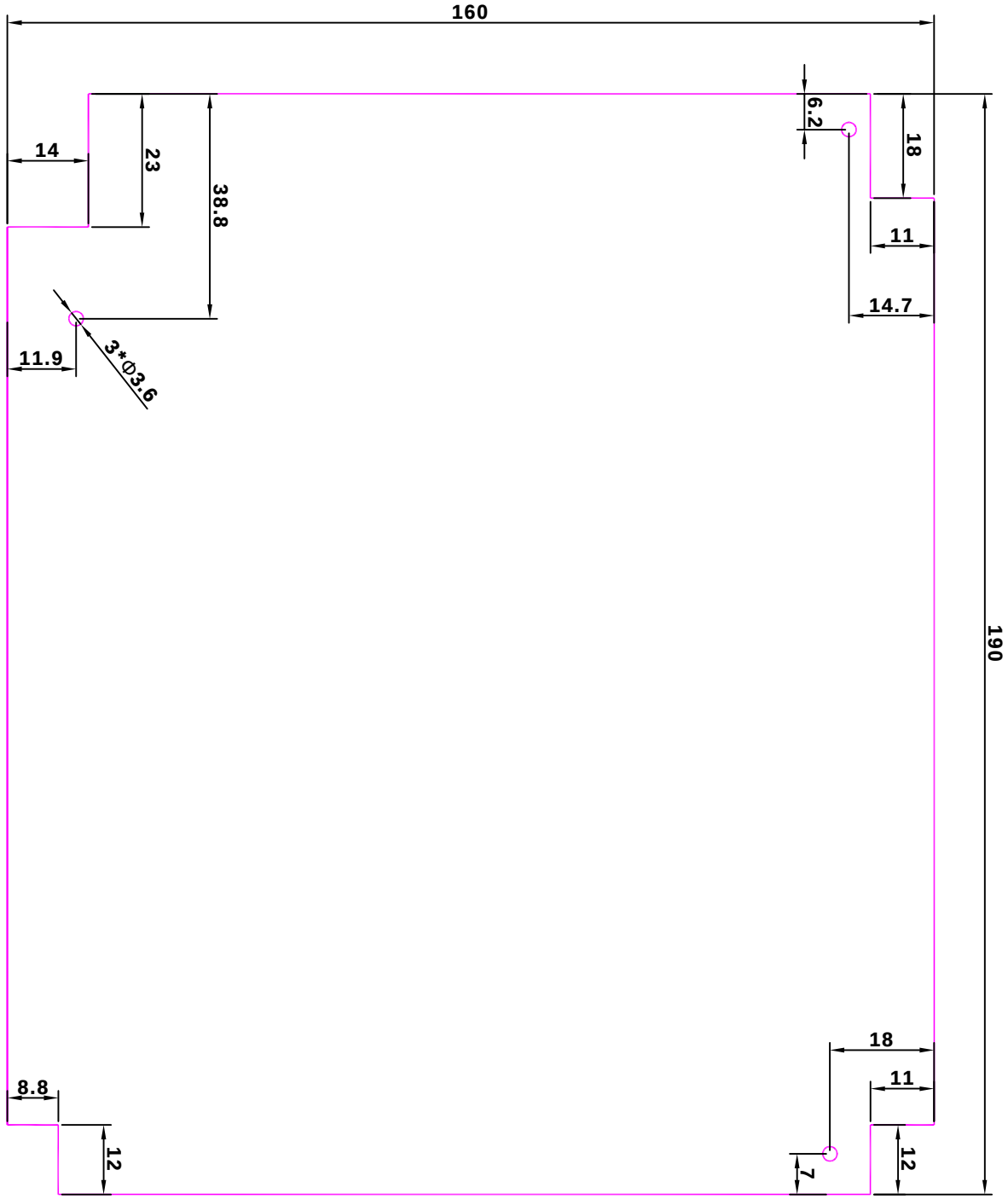
160
14
23
38.8
6.2
18
11
14.7
11.9
3*Ø3.6
190
18
11
8.8
12
7
12

The following Page(s) are related to Diagrams-04. The next supplement, if applicable, will be identified with a new Supplement Page Heading.

青 岛 钛 空 电 子 有 限 公 司

QINGDAO TAIKONG ELECTRIC CO.,LTD

产品承认书

SPECIFICATION FOR APPROVAL

客户名称/CUST NAME：大宇

物料编号/PART NO.：SQ1918-10mH

品名规格/PART NAME：SQ 卧式 2+2 共模电感

承认书编号/FILE NO.：TKSQ1918-10mH

版 本 号/VER NO.：1.0

发行日期/ISSUE DATE.：2019.03.15

收到承认书请回签！

供应商确认				客户确认：□通过 □不通过		
拟 制 DESIGN	审 核 CHECKED	核 准 APPROVED		拟 制 DESIGN	审 核 CHECKED	核 准 APPROVED
吴兵	陈青松	解本山				

青岛钛空电子有限公司

地址:青岛市南区软件园

电 话 :0532 -81818089 13310663808 传 真 :0532-81729123 86511577

EMAIL:xiebenshan1999@126.com； tsingtaoticon@163.com

SPECIFICATION FOR APPROVAL

客户代码 CUST CODE	大宇	客户型号 CUST P/N	SQ1918-10mH	P/N	P1/5
品　名 PART NO.	共模电感	产品规格 SPEC.	SQ1918	DATE	2019.03.15

变更履历表

EDITION NO. 版次	CHANGING REASON 变更原因	CHANGING CONTENT 变更内容	DATE 实施日期	CHECKING 确认签名
1.0	初次发行	初次发行	2019.03.15	吴兵

SPECIFICATION FOR APPROVAL

客户代码 CUST CODE	大宇	客户型号 CUST P/N	SQ1918-10mH	P/N	P2/5
品　名 PART NO.	共模电感	产品规格 SPEC.	SQ1918	DATE	2019.03.15

1. MECHANICAL & ASSEMBLY(UNIT:mm)

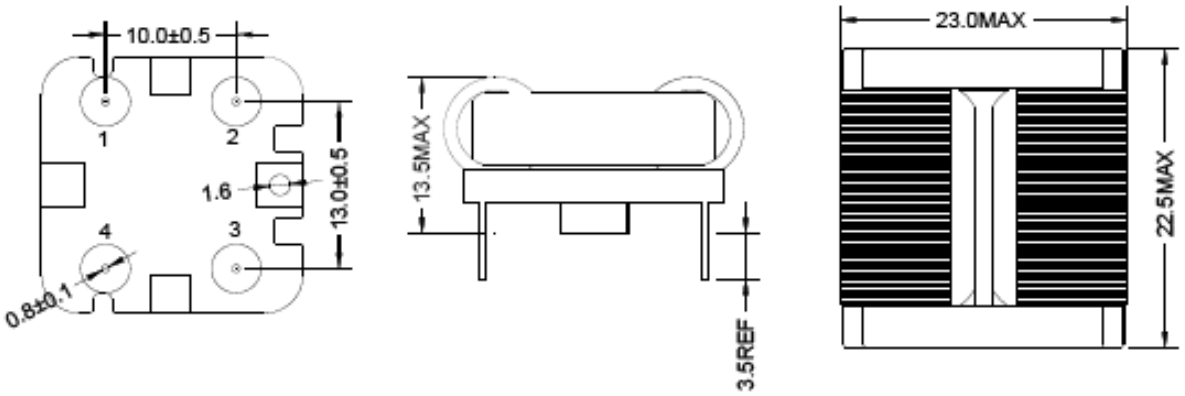

备注:

1.真空浸漆烘干;

DRAWN	CHECHED	APPROVED	ISSUE NO	1.0
吴兵	陈青松	解本山	DRAW NO	A/0
			TYPE	

SPECIFICATION FOR APPROVAL

客户代码 CUST CODE	大宇	客户型号 CUST P/N	SQ1918-10mH	P/N	P3/5
品　名 PART NO.	共模电感	产品规格 SPEC.	SQ1918	DATE	2019.03.15

2. WINDING:(剖面图)

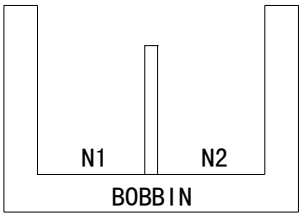

3. SCHEMATTC:(线路图)

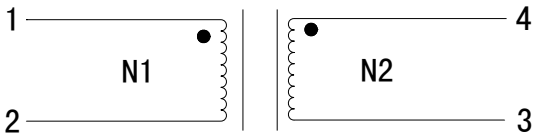

● :同名端

4. WINDNG TABLE:(绕线结构)

序号 NO	起头 S	收尾 F	漆包线 WIRE	圈数 TURNS	套管 TUBE		挡墙 MARGIN TAPE		胶带 TAPE	绕制方式
N1	1	2	0.20*1.0mm(扁平 UEW 线)	51 REF					/	密绕
N2	4	3	0.20*1.0mm(扁平 UEW 线)	51 REF					/	密绕

备注:圈数仅供参考,以电感达到为准;

DRAWN	CHECHED	APPROVED	ISSUE NO	1.0
吴兵	陈青松	解本山	DRAW NO	A/0
			TYPE	

SPECIFICATION FOR APPROVAL

客户代码 CUST CODE	大宇	客户型号 CUST P/N	SQ1918-10mH	P/N	P4/5
品　名 PART NO.	共模电感	产品规格 SPEC.	SQ1918	DATE	2019.03.15

5. ELECTRIC CHARACTERICS (电气参数):

NO.	ITEM 项目	TEST PIN 测试脚位	SPECIFICATION 测试规格	TEST CONDITION 测试条件	TEST APPARATUS 测试仪器
1	INDUCTANCE 电感	1-2 4-3	10mH MIN	1.0KHz,0.25Vrms	CH1062 OR EQU
2	DCR 直流电阻	1-2 4-3	155mΩ MAX	AT 20℃	CH502A OR EQU
3	HI-POT 高压测试	COIL-COIL	NO BROKEN 无击穿	AC1.0KV/5mA/50Hz/3Sec	CH19073 OR EQU
		COIL-CORE	NO BROKEN 无击穿	AC0.50KV/5mA/50Hz/3Sec	CH19073 OR EQU
4	INSULATION RESISTANCE 绝缘电阻	COIL-COIL: COIL-COIL:	100MΩ MIN	DC500V	CH19073 OR EQU

* TEST CONDITION: TEMPERATURE 20℃±5℃,HUMIDITY 65%±20%.

DRAWN	CHECHED	APPROVED	ISSUE NO	1.0
吴兵	陈青松	解本山	DRAW NO	A/0

SPECIFICATION FOR APPROVAL

客户代码 CUST CODE	大宇	客户型号 CUST P/N	SQ1918-10mH	P/N	P5/5
品　名 PART NO.	共模电感	产品规格 SPEC.	SQ1918	DATE	2019.03.15

6.MATERIAL LIST:

NO.	P/N	DESCRIPTION	MATERIAL	MANUFACTURER	TEMP	认证
1	CORE	FEERITE	R12K	HENGDIAN GROUP DMEGC MAGNETICS CO.,LTD	N/A	N/A
2	WIRE	POLYURETHANE	UEW	WELL ASCENT ELECTRONIC(GANZHOU) CO LTD	130℃	E318511
3	BOBBIN	PHENOLIC	T375HF	CHANG CHUN PLASTICS CO LTD	130℃	E59481
4	VARNISH	EPOXY RESIN ALKYD	E962	ZHUHAI CHANGXIAN NEW MATERIALS TECHNOLOGY CO LTD	130℃	E335405

DRAWN	CHECHED	APPROVED	ISSUE NO	1.0
吴兵	陈青松	解本山	DRAW NO	A/0
			TYPE	

The following Page(s) are related to Diagrams-05. The next supplement, if applicable, will be identified with a new Supplement Page Heading.

德 州 三 和 电 器 有 限 公 司

DEZHOU SANHE ELECTRIC CO.,LTD

客 户 承 认 书

SPECIFICATION

CUSTOMER NAME/客户名称: 青岛钛空

PRODUCT NAME/产品名称: TRANSFORMER

CUSTOMER P/N./客户料号: EE42-1

SANHE P/N./三和型号: SANHE-42-434

S.W NO./编码:

AUTHORIZED SIGNATURE&COMPANY CHOP 客户认可签回.（盖章）	

DESIGN/拟制	陈明	CHECK/审核	任岳	APPROVAL/批准	闫洪俊
PAGE/页码	1/6	EDITION/版本	01	DATE/日期	209.03.04

Add: No.1227 Jinghua Road,Dezhou,Economic Development Zone,Shandong,China.
地址：中国山东省德州市经济开发区晶华大道 1227 号.
Tel: 0534-2552182 Postcode: 253034
Fax: 0534-2552182 http://www.sanhe-china.com

CUSTOMER P/N	EE42-1	SANHE P/N	SANHE-42-434
EDITION NO.	01	ISSUE DATE	2019.03.04

APPLICATION 申请	青岛钛空			
MANUFACTURER 制造厂商	德州三和电器有限公司 DEZHOU SANHE ELECTRIC CO.,LTD			
EDITION NO. 版次	CHANGING REASON 变更原因	CHANGING CONTENT 变更内容	DATE 实施日期	CHECKING 确认签名

CUSTOMER P/N	EE42-1	SANHE P/N	SANHE-42-434
EDITION NO.	01	ISSUE DATE	2019.03.04

1. CONFIGRATION & DIMENSIONS (安装尺寸及外形图)：(UNIT:mm)

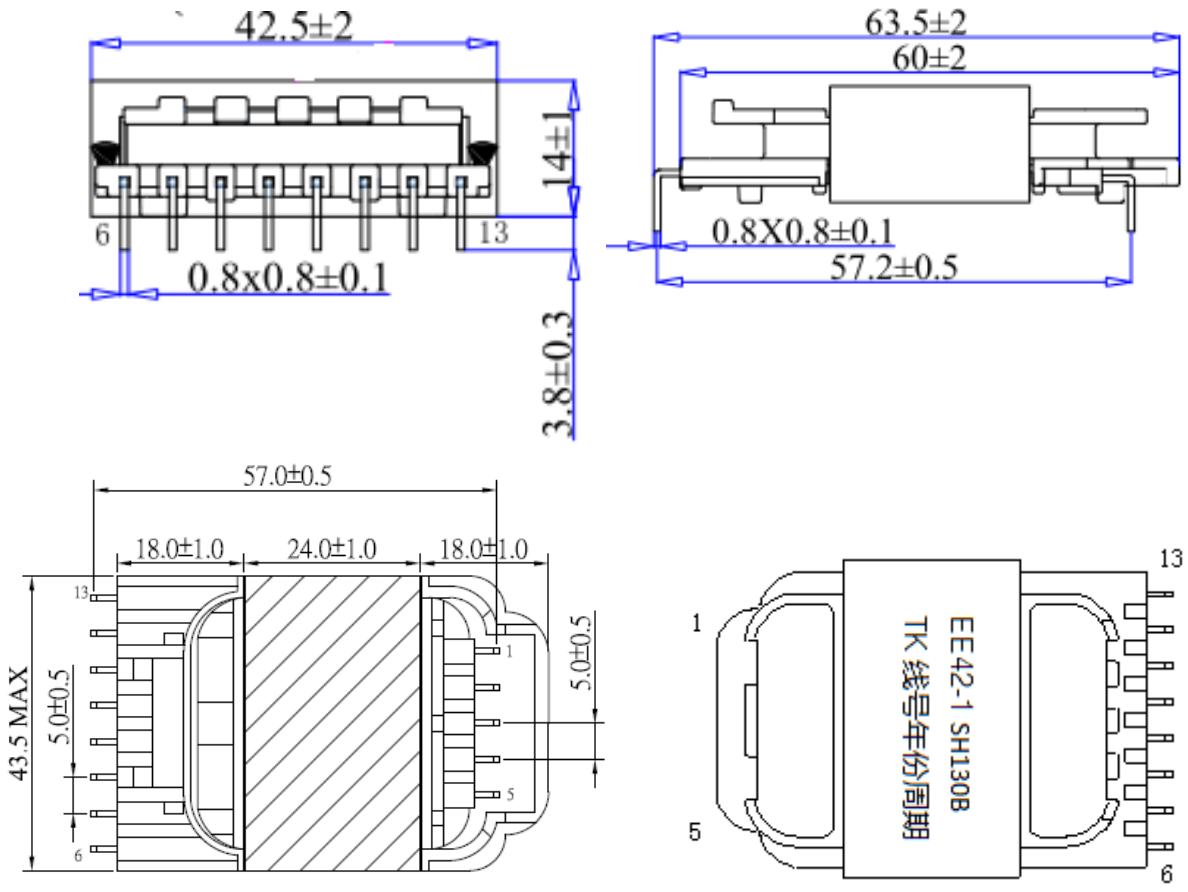

NOTE:

1. 全要。
2. 磁芯包 2TS 淡黄胶带固定。
3. 产品浸油处理。
4. 产品喷印如图示。

2. SCHEMATIC(原理图):

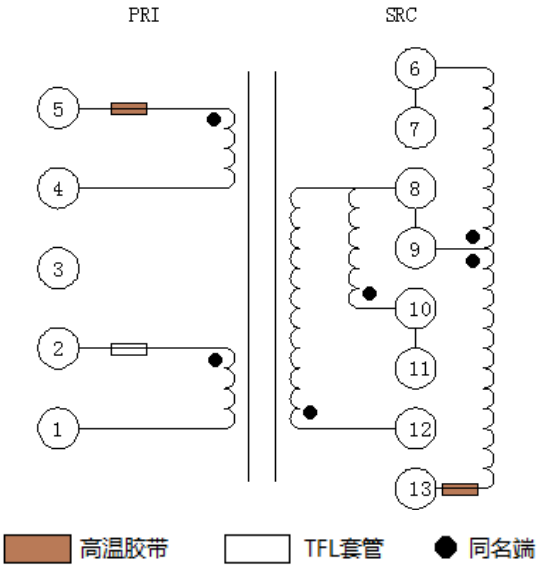

3.WINDING CONSTRUCTION(绕组结构图):

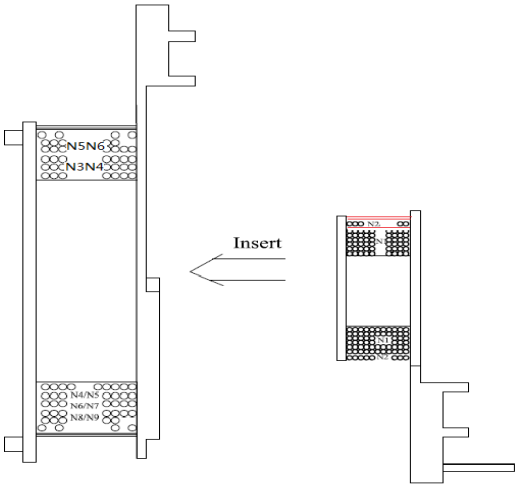

4.WINDING DATA(绕组数据):

绕组 WINDING	脚位/PIN 起始	脚位/PIN 结束	线材 WIRE	圈数 TURNS	绕线方式 WI D MO E	绝缘胶带 IN ULATION TAP
N1	5	4	UEW Φ0.1*20	51	密绕	1TS
N2	2	1	TEX-EΦ0.2	6	密绕	1TS
N3	12	8	UEW Φ0.1*30	10	并密绕	
N4	9	13	UEW Φ0.1*30	10		
N5	10	8	UEW Φ0.1*50	3	并密绕	2TS
N6	9	6	UEW Φ0.1*50	3		

备注：6,7 钉在 PCB 板上为同一焊盘；8,9 钉在 PCB 板上为同一焊盘；10,11 钉在 PCB 板上为同一焊盘；变压器本身同一焊盘两钉之间可焊连也可不焊连

CUSTOMER P/N	EE42-1	SANHE P/N	SANHE-42-434
EDITION NO.	01	ISSUE DATE	2019.03.04

5. ELECTRIC CHARACTERICS (AT 电气参数:AT 25℃±5℃, 60±5%RH)

NO.	ITEM 项目	TEST PIN 测试脚位	SPECIFICATION 测试规格	TEST CONDITION 测试条件	TEST APPARATUS 测试仪器
1	INDUCTANCE 电感	5-4	700uH±10%	10KHz,0.3Vrms	HP4284A OR EQU
2	LEAKAGE INDUCTANCE 漏感	5-4 (SEC SHORT)	160μH±10%		
3	DC RESISTENCE 直流电阻	5-4	550m Ω MAX	T=25℃	CH-502A
4	HI-POT 高压测试	PRI-SEC	NO BROKEN 无击穿	AC3.75KV/5mA/50Hz/3S	CH19073 OR EQU
		PRI-CORE		AC2.0KV/5mA/50Hz/3	
		SEC-CORE		AC0.5KV/5mA/50Hz/3S	
5	INSULATION RESISTANCE 绝缘电阻	PRI-SEC	100MΩ MIN	DC500V	
		PRI-CORE			
		SEC-CORE			

6. MATERIAL LIST(材料清单)

NO. 序号	PARTS NAME 材料名称	MATERIAL 材质	SPEC/规格 ℃	SPEC/规格 UL94	MANUFACTURER 供应商	UL NO. 安规号
1	CORE	EE42 PC40 同等	N/A	N/A	ZAOZHUANG YIYUANG ELECTRONICS CO.,LTD ZAOZHUANG JUHENG ELECTRONICS CO.,LTD ZHAOTIAN ELECTRONICS CO.,LTD	N/A
2	BOBBIN	PM-9820	150℃	V-0	SUMITOMO BAKELITE CO LTD	E41429
3	POLYESTER TAPE	CT* (c)(g)	130℃	N/A	JINGJIANG YAHUA PRESSURE SENSITIVE GLUE CO LTD	E165111
4	WIRE	*UEW/130	130℃	N/A	SHANDONG SAINT ELECTRIC CO LTD	E194410
5	SOLDER	SN-CU-NI			TIANJIN QINGHE SCIENCE-TECH DEVELOPMENT CO.,LTD	
6	TUBE	TFL	200℃	VW-1	GREAT HOLDING INDUSTRIAL CO LTD	E156256
7	VARNISH	TVB2180T*(a)	155℃		KYOCERA CHEMICAL CORP	E83702
8	TRIPLE INSULATION WIRE	TEX-E			FURUKAWA ELECTRIC CO LTD	E206440

The following Page(s) are related to Diagrams-12. The next supplement, if applicable, will be identified with a new Supplement Page Heading.

德 州 三 和 电 器 有 限 公 司

DEZHOU SANHE ELECTRIC CO.,LTD

客 户 承 认 书

SPECIFICATION

CUSTOMER NAME/客户名称: 青岛钛空

PRODUCT NAME/产品名称: TRANSFORMER

CUSTOMER P/N./客户料号: EQ25-1

SANHE P/N./三和型号: SANHE-28-541

S.W NO./编码:

AUTHORIZED SIGNATURE&COMPANY CHOP 客户认可签回.（盖章）	

DESIGN/拟制	陈明	CHECK/审核	任岳	APPROVAL/批准	闫洪俊
PAGE/页码	1/6	EDITION/版本	01	DATE/日期	2019.03.04

Add: No.1227 Jinghua Road,Dezhou,Economic Development Zone,Shandong,China.
地址：中国山东省德州市经济开发区晶华大道 1227 号.
Tel: 0534-2552182 Postcode: 253034
Fax: 0534-2552182 http://www.sanhe-china.com

CUSTOMER P/N	EQ25-1	SANHE P/N	SANHE-28-541
EDITION NO.	01	ISSUE DATE	2019.03.04

APPLICATION 申请	青岛钛空			
MANUFACTURER 制造厂商	德州三和电器有限公司 DEZHOU SANHE ELECTRIC CO.,LTD			
EDITION NO. 版次	CHANGING REASON 变更原因	CHANGING CONTENT 变更内容	DATE 实施日期	CHECKING 确认签名

CUSTOMER P/N	EQ25-1	SANHE P/N	SANHE-28-541
EDITION NO.	01	ISSUE DATE	2019.03.04

1. CONFIGRATION & DIMENSIONS (安装尺寸及外形图)：(UNIT:mm)

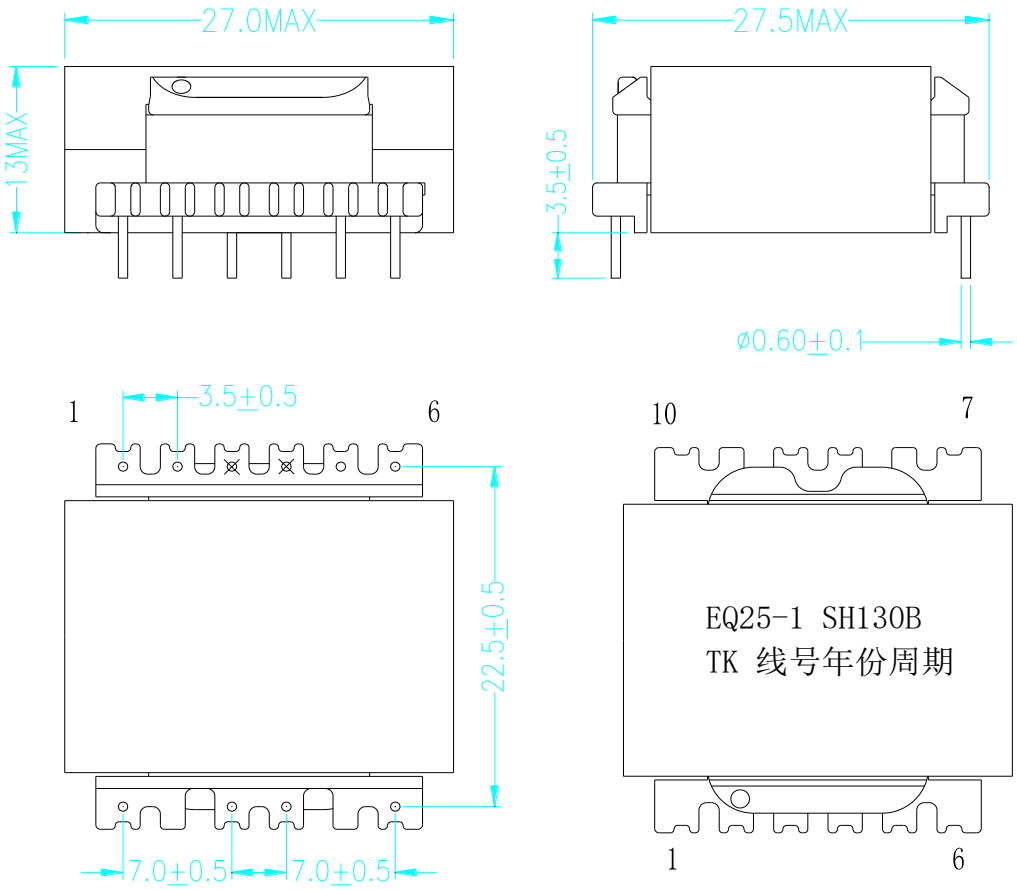

NOTE:

1. PIN3，4 空。
2. 磁芯包 2TS 淡黄胶带固定。
3. 产品浸油处理。
4. 产品喷印如图示。

2. SCHEMATIC(原理图):

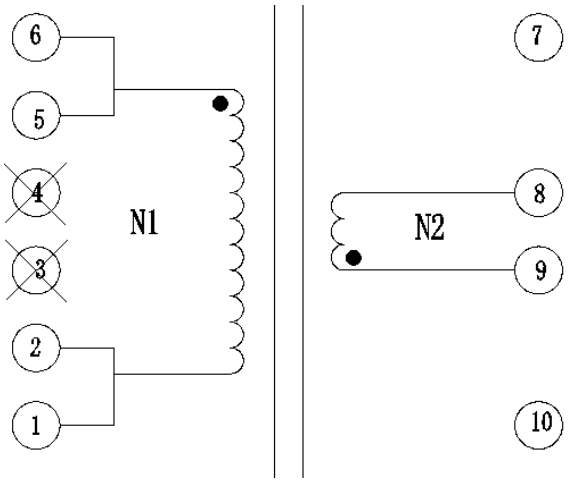

3.WINDING CONSTRUCTION(绕组结构图):

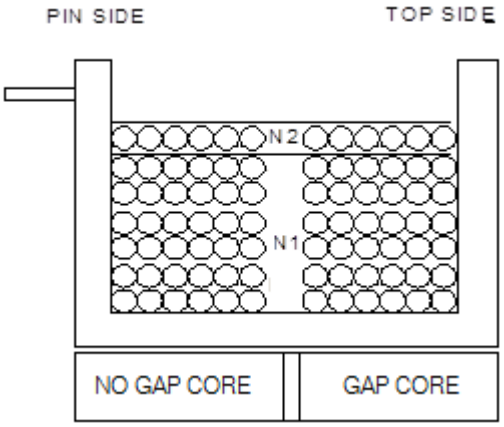

4.WINDING DATA(绕组数据):

绕组 WINDING	脚位/PIN 起始	脚位/PIN 结束	线材 WIRE	圈数 TURNS	绕线方式 WI D MO E	绝缘胶带 IN ULATION TAP
N1	5,6	1,2	UEW Φ0.1*30	28	密绕	2TS
N2	9	8	UEW Φ0.25	2	密绕	2TS

5. ELECTRIC CHARACTERICS (AT 电气参数:AT 25℃±5℃, 60±5%RH)

NO.	ITEM 项目	TEST PIN 测试脚位	SPECIFICATION 测试规格	TEST CONDITION 测试条件	TEST APPARATUS 测试仪器
1	INDUCTANCE 电感	5,6-1,2	110uH±10%	10KHz,0.3Vrms	HP4284A OR EQU
3	DC RESISTENCE 直流电阻	5,6-1,2	130m Ω MAX	T=25℃	CH-502A
4	HI-POT 高压测试	COIL-COIL	NO BROKEN 无击穿	AC1.0KV/5mA/50Hz/3S	CH19073 OR EQU
		CORE-CORE		AC0.5KV/5mA/50Hz/3	
5	INSULATION RESISTANCE 绝缘电阻	COIL-COIL	100MΩ MIN	DC500V	
		CORE-CORE			

6. MATERIAL LIST(材料清单)

NO. 序号	PARTS NAME 材料名称	MATERIAL 材质	SPEC/规格		MANUFACTURER 供应商	UL NO. 安规号
			℃	UL94		
1	CORE	EQ25 PC40 同等	N/A	N/A	ZAOZHUANG YIYUANG ELECTRONICS CO.,LTD ZAOZHUANG JUHENG ELECTRONICS CO.,LTD ZHAOTIAN ELECTRONICS CO.,LTD	N/A
2	BOBBIN	PM-9820	150℃	V-0	SUMITOMO BAKELITE CO LTD	E41429
3	POLYESTER TAPE	CT* (c)(g)	130℃	N/A	JINGJIANG YAHUA PRESSURE SENSITIVE GLUE CO LTD	E165111
4	WIRE	*UEW/130	130℃	N/A	SHANDONG SAINT ELECTRIC CO LTD	E194410
5	SOLDER	SN-CU-NI			TIANJIN QINGHE SCIENCE-TECH DEVELOPMENT CO.,LTD	
6	VARNISH	TVB2180T*(a)	155℃		KYOCERA CHEMICAL CORP	E83702

The following Page(s) are related to Diagrams-13. The next supplement, if applicable, will be identified with a new Supplement Page Heading.

SMT-4345 43inch UHD New design

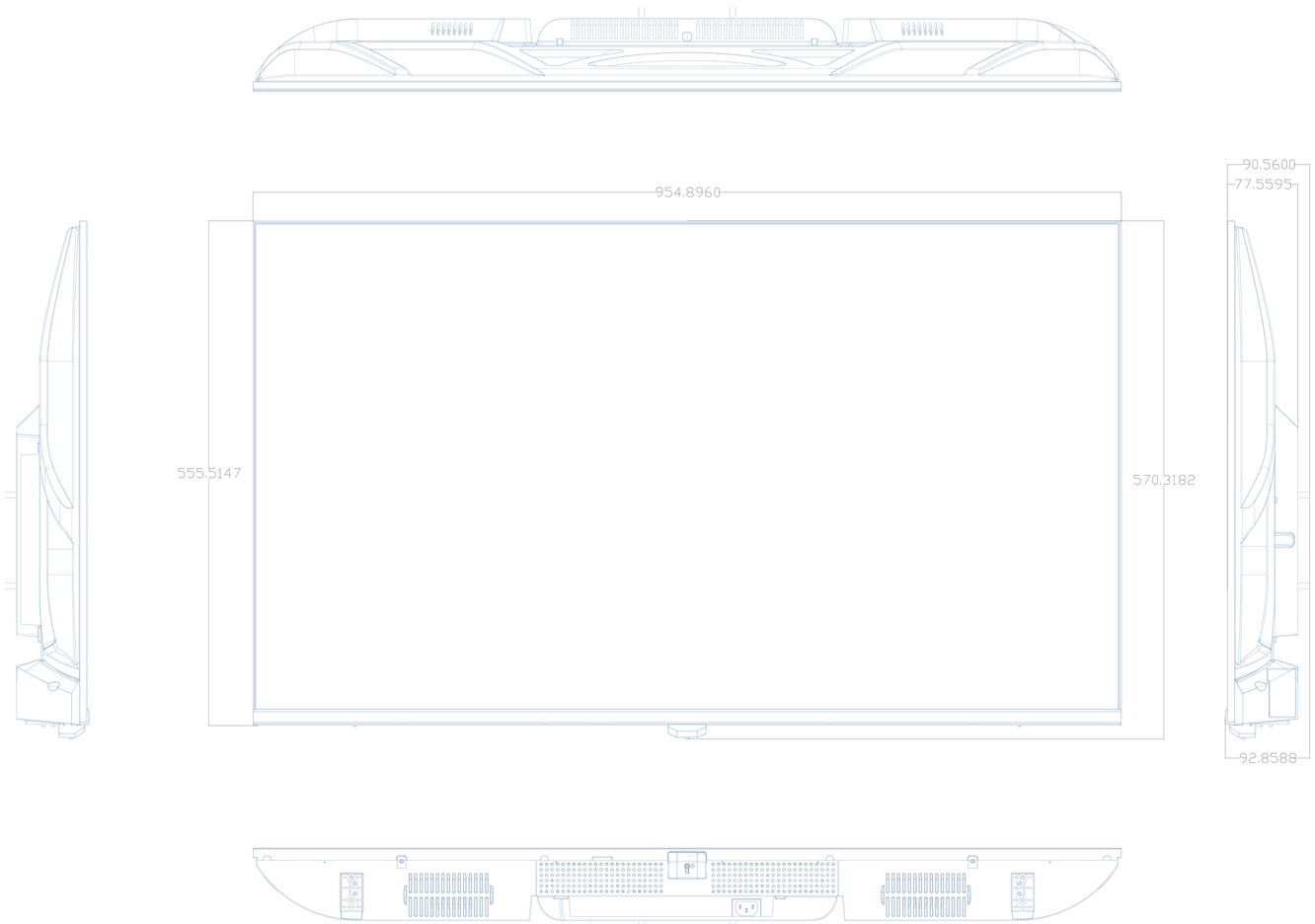

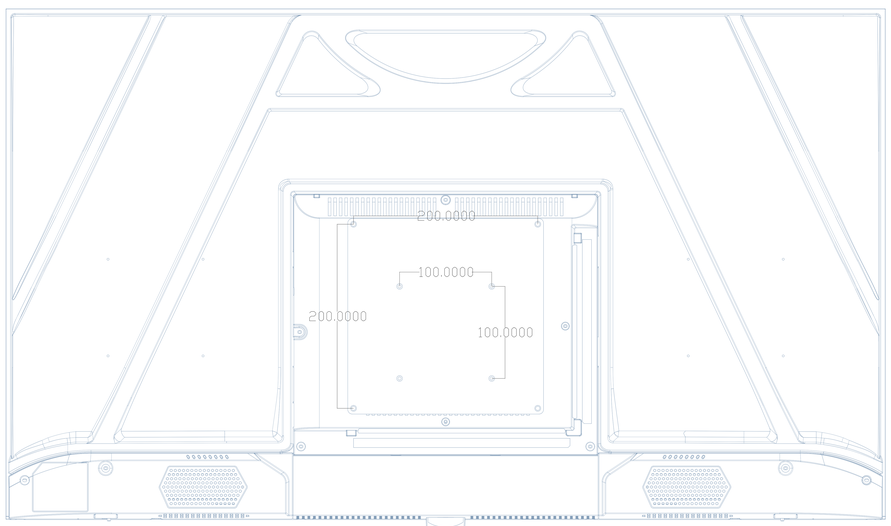

Revision	V1.0
Revision Date	2025/5/30
Unit	mm(inch)
Scale	1:1

The following Page(s) are related to Diagrams-14. The next supplement, if applicable, will be identified with a new Supplement Page Heading.

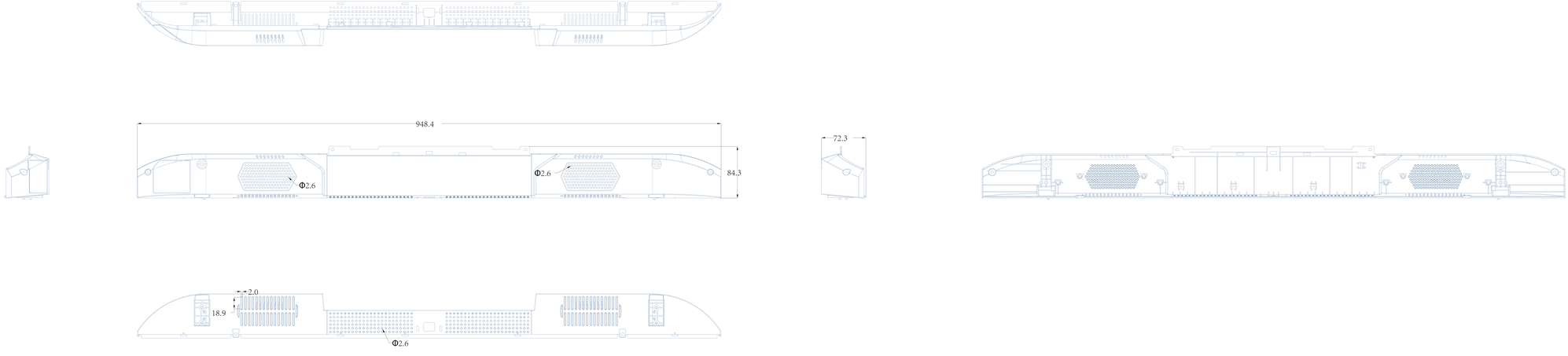
948.4
Φ2.6
Φ2.6
84.3
72.3
2.0
18.9
Φ2.6

The following Page(s) are related to Diagrams-15. The next supplement, if applicable, will be identified with a new Supplement Page Heading.

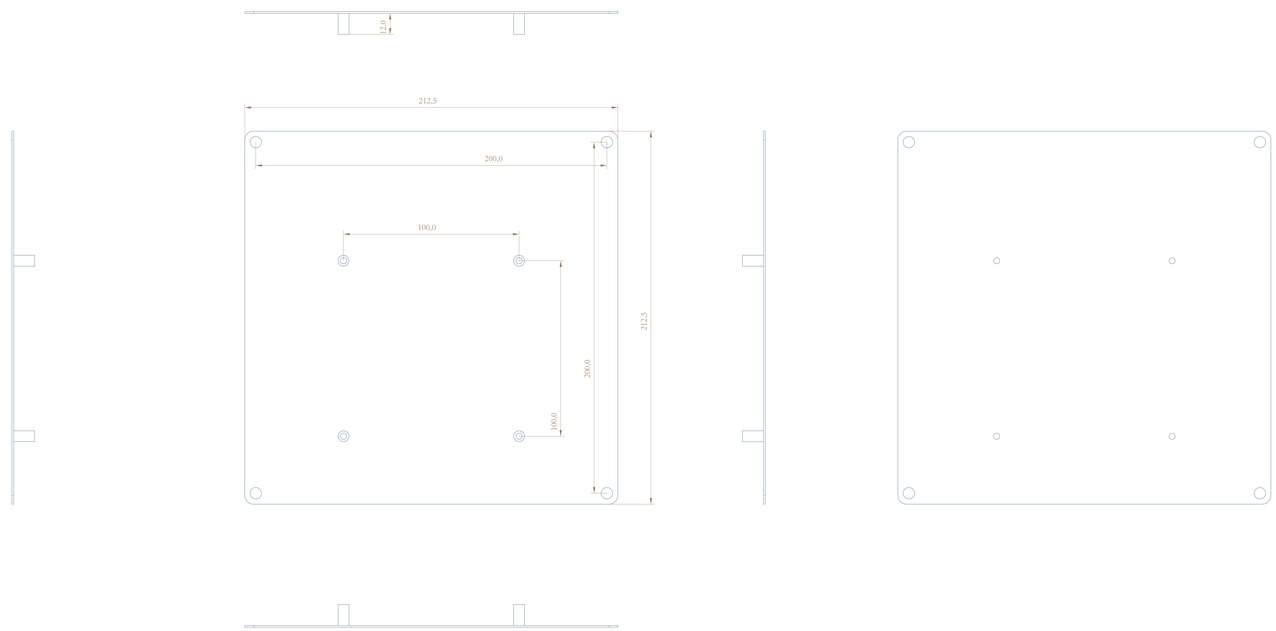
12,0
212,5
200,0
100,0
100,0
200,0
212,5

The following Page(s) are related to Manuals-01. The next supplement, if applicable, will be identified with a new Supplement Page Heading.

Please take note of the followings before using this product.

- Do not use the product outdoor.
- Do not spill water or liquid in the connection part of the product.
- Do not impose the system to excessive shock or force.
- Do not pull out the power plug forcefully.
- Do not disassemble the product on your own.
- Do not exceed the rated input/output range.
- Use a certified power cord only.
- For the product with an input ground, use a grounded power plug.

BEFORE INSTALLING THE PRODUCT

Ventilation requirement

Installing the product in an environment where the air does not circulate well could cause product damage due to increased temperature. Make sure to secure enough space around the product for proper air ventilation.

Vertical wall mount condition

A. Minimum 40 mm

B. Ambient temperature Measuring point <35°C

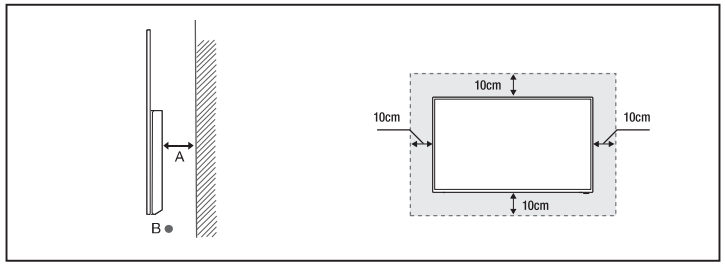

INSTALLING WALL MOUNT PARTS

Installing Wall Mount Kits

The wall mount kit (sold separately) allows you to hang the product on a wall.

For more information on wall mounting, refer to the owner's manual supplied with the wall mount parts. When installing the wall mount, seek the help of a technician.

Hanwha Techwin is not responsible for any damage to the product or injury to the user or others caused by any accident due to a user's attempt to install the product.

Wall Mount Kit Specifications (VESA)

- Install the wall mount kit on a solid wall perpendicular to the floor.
- Please refer to the nearest store when installing on other materials.
- Installing on an inclined wall may cause the product to fall, which can result in serious injury.
- When using a VESA mount, select a product that can hold 4 times the weight of the monitor.

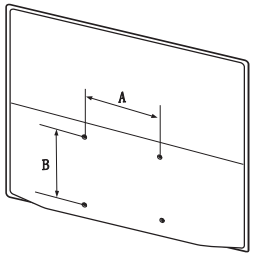

- When you purchase our wall mount kit, you will find a detailed installation guide and all parts required for assembly.
- Do not use screws that are longer than the standard dimensions or that do not conform to the VESA standard screw specifications. Using screws that are too long may damage the inside of the product.
- For wall mount parts that do not conform to the VESA standard screw specifications, the screw length may vary depending on the wall mount specifications.
- Do not over-tighten the screws. The product may be damaged, or may fall, resulting in injury.
  Hanwha Techwin is not responsible for any damage to the product or injury to the user or others caused by any accident due to a user's attempt to install the product.
- Hanwha Techwin is not responsible for damage to the product or injury to the user caused by using non-compliant or non-VESA wall mount parts, or by the customer not following the product installation instructions.
- When hanging on a wall, two people should always lift the product.
- The standard dimensions of the wall mount kit are shown in the table below. [Unit: mm]

Model name	VESA dimensions (A * B)	Standard screws	Quantity
SMT-4344	100 x 100 / 400 x 200	M4/L12	4

- Do not install the wall mount kit with the product turned on. This may lead to injury due to electric shock.

The following Page(s) are related to Manuals-02. The next supplement, if applicable, will be identified with a new Supplement Page Heading.

Hanwha Vision

SECURITY LED MONITOR

User Manual

SMT-4345

CE

Security LED Monitor
User Manual

Copyright

©2023 Hanwha Vision Co., Ltd. All rights reserved.

Trademark

Each of trademarks herein is registered. The name of this product and other trademarks mentioned in this manual are the registered trademark of their respective company.

Restriction

Copyright of this document is reserved. Under no circumstances, this document shall be reproduced, distributed or changed, partially or wholly, without formal authorization.

Disclaimer

Hanwha Vision makes the best to verify the integrity and correctness of the contents in this document, but no formal guarantee shall be provided. Use of this document and the subsequent results shall be entirely on the user's own responsibility. Hanwha Vision reserves the right to change the contents of this document without prior notice.

※ Design and specifications are subject to change without prior notice.

IMPORTANT SAFETY INSTRUCTIONS

Read these operating instructions carefully before using the unit.
Follow all the safety instructions listed below.
Keep these operating instructions handy for future reference.

1) Read these instructions.
2) Keep these instructions.
3) Heed all warnings.
4) Follow all instructions.
5) Do not use this apparatus near water.
6) Clean the contaminated area on the product surface with a soft, dry cloth or a damp cloth. (Do not use a detergent or cosmetic products that contain alcohol, solvents or surfactants or oil constituents as they may deform or cause damage to the product.)
7) Do not block any ventilation openings, Install in accordance with the manufacturer's instructions.
8) Do not install near any heat sources such as radiators, heat registers, stoves, or other apparatus (including amplifiers) that produce heat.
9) Do not defeat the safety purpose of the polarized or grounding- type plug. A polarized plug has two blades with one wider than the other. A grounding type plug has two blades and a third grounding prong. The wide blade or the third prong are provided for your safety. if the provided plug does not fit into your outlet, consult an electrician for replacement of the obsolete outlet.
10) Protect the power cord from being walked on or pinched particularly at plugs, convenience receptacles, and the point where they exit from the apparatus.
11) Only use attachments/accessories specified by the manufacturer.
12) Use only with the cart, stand, tripod, bracket, or table specified by the manufacturer, or sold with the apparatus. When a cart is used, use caution when moving the cart/ apparatus combination to avoid injury from tip-over.

13) Unplug this apparatus during lightning storms or when unused for long periods of time.
14) Refer all servicing to qualified service personnel. Servicing is required when the apparatus has been damaged in any way, such as power-supply cord or plug is damaged, liquid has been spilled or objects have fallen into the apparatus, the apparatus has been exposed to rain or moisture, does not operate normally, or has been dropped.

Standards Approvals

- Any changes or modifications in construction of this device which are not expressly approved by the party responsible for compliance could void the user's authority to operate the equipment.

- This device complies with part 15 of the FCC Rules. Operation is subject to the following two conditions: (1) This device may not cause harmful interference, and (2) this device must accept any interference received, including interference that may cause undesired operation.
- This equipment has been tested and found to comply with the limits for a Class A digital device, pursuant to part 15 of the FCC Rules. These limits are designed to provide reasonable protection against harmful interference when the equipment is operated in a commercial environment.
  This equipment generates, uses, and can radiate radio frequency energy and, if not installed and used in accordance with the instruction manual, may cause harmful interference to radio communications. Operation of this equipment in a residential area is likely to cause harmful interference in which case the user will be required to correct the interference at his own expense.

BEFORE START

You have to keep in mind the following notices :

- Hanwha Vision retains the copyright on this manual.
- This manual cannot be copied without Hanwha Vision's prior written approval.
- We are not liable for any or all losses to the product incurred by your use of non-standard product or violation of instructions mentioned in this manual.
- Contact the retailer for troubleshooting help.

SAFETY INSTRUCTIONS

Power		
Do not use a damaged power cord or plug or a damaged or loose power outlet. • Otherwise, this may result in electric shock or fire.	Do not touch the power plug with wet hands when removing or plugging the plug into the outlet. • Otherwise, this may result in electric shock	Make sure to connect the power cord to a grounded power outlet. • Otherwise, it may result in electric shock or personal injury.
Ensure that the power plug is plugged into the power outlet firmly and correctly. • Otherwise, this may result in fire.	Do not forcefully bend or pull the power plug and do not place any heavy material on it. • Otherwise, this may result in fire.	Do not connect multiple appliances to the same power outlet. • Otherwise, this may cause fire due to overheating.
Do not disconnect the power cord while using the product. • Otherwise, this may result in damage to the product due to electric shock.	To disconnect the apparatus from the mains, the plug must be pulled out from the mains socket, therefore the mains plug shall be readily operable. • Otherwise, this may cause electric shock or fire.	Use only the power cord provided by our company. Do not use the provided power cord of another product. • Otherwise, this may result in fire or electric shock.
Connect the power plug to a wall outlet that can be easily reached. • When a problem occurs with the product, you must unplug the power plug to cut the power off completely. You cannot cut the power off completely using only the power button on the product.		
Installation		
Ensure that at least two persons lift and move the product. • Otherwise, it may be dropped and cause personal injury, and/ or damage the product.	When installing the product in a cabinet or rack, make sure that the front end of the bottom of the product does not project out. • Otherwise, it may fall or cause personal injury. • Use a cabinet or rack of a size appropriate to the product.	Do not place candles, mosquito repellant, cigarettes and any heating appliances near the product. • Otherwise, this may result in fire.
Keep heating appliances as far away from the power cord or the product as possible. • Otherwise, this may result in electric shock or fire.	Do not install it in a badly ventilated location such as a bookcase or closet. • Otherwise, this may result in fire due to an increase in the internal temperature.	When putting the product down, make sure to put it down softly. • Otherwise, this may result in damage to the screen display.
Do not place the front of the product on the floor. • Otherwise, this may result in damage to the screen display.	Ensure that an authorized installation company installs the wall mount. • Otherwise, it may fall and cause personal injury. • Make sure to install the specified wall mount.	Install your product in a well ventilated location. Ensure that there is a clearance of more than 4 inches (10 cm) from the wall. • Otherwise, it may result in fire due to an increase in the internal temperature.
Ensure that the packaging vinyl is kept away from children. • Otherwise, it may result in serious harm (suffocation) if children play with it.	If the height of your monitor is adjustable, do not place any object or part of your body on the stand when lowering it. • This may cause damage to the product or the person carrying it.	
Clean		
Do not spray cleaner directly onto the surface of the product. • Otherwise, this may result in the discoloration and distortion of the structure and the screen surface may peel off.	When cleaning the power plug pins or dusting the power outlet, clean it with a dry cloth. • Otherwise, it may result in fire.	When cleaning the product, make sure to disconnect the power cord. • Otherwise, it may result in electric shock or fire.
When cleaning the product, disconnect the power cord and clean it with a soft, dry cloth. • (Do not use chemicals such as wax, benzene, alcohol, thinner, mosquito repellant, lubricant, or cleaner.) These may change the appearance of the product surface and peel off the indication labels on the product.	Since the product housing is easily scratched, make sure to use the specified cloth only.	When cleaning the product, do not spray water directly onto the main body of the product. • Ensure that water does not enter the product and that it is not wet. • Otherwise, this may result in electric shock, fire or a malfunction.

Others		
The product is a high voltage product. Do not disassemble, repair or modify the product yourself. • Otherwise, this may result in electric shock or fire. If the product needs to be repaired, contact a Service Center.	If there is a strange smell or a strange sound or smoke is coming from the product, disconnect the power plug immediately and contact a Service Center. • Otherwise, this may result in electric shock or fire.	Do not place this product in a location exposed to moisture, dust, smoke, water, or in a car. • Otherwise, this may result in electric shock or fire.
When you drop the product or the case is broken, turn the power off and disconnect the power cord. Contact a Service Center. • Otherwise, this may result in electric shock or fire.	Never touch the power cord during a thunderstorm because it could be extremely dangerous. • Otherwise, this may result in electric shock or fire.	Do not try to move the monitor by pulling only the wire or the signal cable. • Otherwise, it may fall and result in electric shock, damage to the product or fire due to damage to the cable.
Do not lift or move the product back and forwards or right and left while only holding the power cord or signal cables. • Otherwise, it may fall and result in electric shock, damage to the product or fire due to damage to the cable.	Make sure that the ventilating opening is not blocked by a table or curtain. • Otherwise, it may result in fire due to an increase in the internal temperature.	Do not place any containers containing water, vases, flowerpots, medicines as well as any metal on the product. • If water or a foreign material enters the product, disconnect the power cord and contact a Service Center. • This may result in a product malfunction, electric shock, or fire.
Do not use or keep combustible spray or flammable material near the product. • Otherwise, this may result in an explosion or fire.	Do not insert any metal, such as chopsticks, coins, pins and steel, or flammable objects, such as matches or paper, inside the product (through the ventilating openings, input and output terminals, etc). • If water or foreign material enters the product, disconnect the power cord and contact a Service Center. • Otherwise, this may result in electric shock or fire.	When using a fixed screen for a long time, an afterimage or stain may occur. • If you are not going to use the product for an extended period of time, set it to sleep mode.
When using headphones or earphones, do not turn the volume too high. • Having the sound too loud may damage your hearing.	To avoid eyestrain, do not sit too close to the product.	Do not install it in an unstable location such as an unstable rack or uneven surface or a location exposed to vibrations. • Otherwise, it may fall and cause personal injury and/or damage the product. • If you use the product in a location exposed to vibrations, it may damage the product and result in fire.

If you have to move the product, turn off the power and disconnect the power plug and all the cables connected to the product. • Otherwise, it may result in electric shock or fire.	Ensure that children do not hang onto the product or climb up onto the product. • The product may fall and cause personal injury or death.	If you do not use the product for a long period of time, disconnect the power cord from the power outlet. • Otherwise, this may result in overheating or fire due to dust, and may result in fire due to electric shock or leakage.
Do not place any heavy items or toys or confectionery, such as cookies etc. that may attract the attention of children and to the product. • Your children may hang onto the product causing it to fall and this may result in personal injury or death.	Be careful that children do not place the battery in their mouths when removed from the remote control. Place the battery in a location that children or infants cannot reach. • If children have had the battery in their mouths, consult your doctor immediately.	When replacing the battery, insert it with the right polarity (+, -). • Otherwise, the battery may become damaged or it may cause fire, personal injury or damage due to leakage of the internal liquid.
Use only the specified standardized batteries, and do not use a new battery and a used battery at the same time. • Otherwise, the batteries may be damaged or cause fire, personal injury or damage due to a leakage of the internal liquid.	The batteries (and rechargeable batteries) are not ordinary refuse and must be returned for recycling purposes. The customer is responsible for returning the used or rechargeable batteries for recycling. • The customer can return used or rechargeable batteries to a nearby public recycling center or to a store selling the same type of the battery or rechargeable battery.	Do not place the product in a location exposed to direct sunlight or near any heat such as a fire or heater. • This may reduce the lifetime of the product, and may result in fire.
Do not drop any objects onto the product or cause any impact to the product. • Otherwise, this may result in electric shock or fire.	Do not use a humidifier near the product. • Otherwise, this may result in electric shock or fire.	When there is a gas leak, do not touch the product or the power plug; ventilate immediately. • If a spark occurs, it may cause an explosion or fire.
If the product has been turned on for a long time, the display panel becomes hot. Do not touch it.	Keep the small accessories in a location out of the reach of children.	Be careful when adjusting the angle of the product or the height of the stand. • This may result in personal injury as your hand or fingers may become caught. • Also, if you tilt the product too far, it may fall and cause personal injury.
Do not install the product in a location low enough for children to reach. • Otherwise, it may fall and result in personal injury. • Since the front part of the product is heavy, install the product on a level and stable surface.	Do not put any heavy objects on the product. • This may result in personal injury and/or damage to the product.	

CONTENTS

OVERVIEW 3

3 Important Safety Instructions
3 Before Start
4 Safety Instructions
8 Names and functions of each part

INSTALLATION 10

10 Before Installing the Product
10 Installing Wall Mount Parts

CONNECTING WITH OTHER DEVICE 11

11 Things to check before connection
11 Connecting with external devices
12 Power Supply

MENU SETTINGS 13

13 Screen (OSD) menu settings
13 Video settings
14 osd settings
14 System settings
14 Reset

APPENDIX 15

15 Product Overview
16 Troubleshooting

Package Contents

Please unwrap the product, and place the product on a flat place or in the place to be installed.
Please check the following contents are included in addition to the main unit.

- Accessory category and quantity may differ depending on sales region.
- Stand is not provided; please purchase a stand and install it separately.

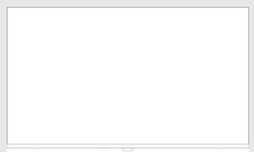

Security LED Monitor

Power Cord

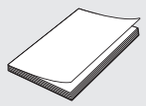

Quick Start Guide

Remote Control ,
Remote Control Battery (AAA)

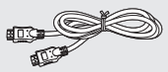

HDMI Cable

NAMES AND FUNCTIONS OF EACH PART

Back

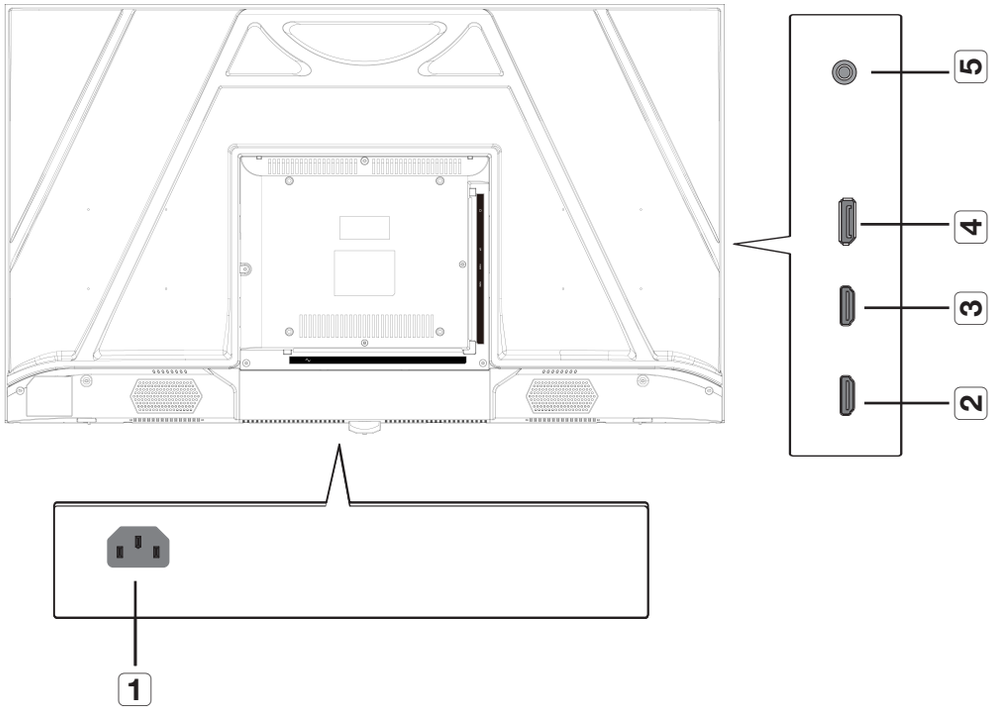

	Name	Description of functions
1	Power	Terminal to connect power.
2	HDMI	Used to connect an external device using an HDMI cable.
3	HDMI	Used to connect an external device using an HDMI cable.
4	DP	Used to connect external devices using a DP cable.
5	AUDIO OUT	Used to input sound using the sound cable.

Remote Reception System

Press the button with the remote control pointed toward the remote control receiver to operate it.

- If another display is used with this product in the same space where the remote control is being used, it may cause a malfunction due to interference of the remote control frequency.

Use the remote control within a range of 7 - 10m and 30° left/right from the product receiver.

- Remove used batteries and keep them out of the reach of children.
- Do not combine new and used batteries. When replacing the batteries, please replace both of them at once.
- Remove the batteries if you do not intend to use the remote control for an extended period of time.

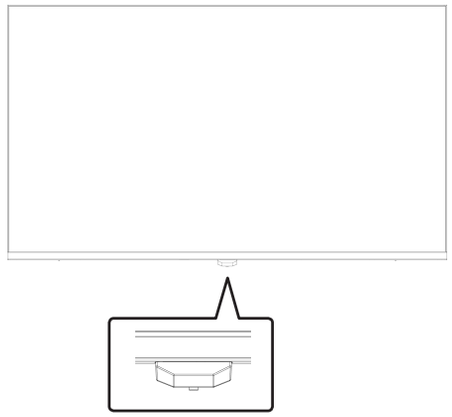

Remote Reception System

REMOTE CONTROL

If another display is used with this product in the same space where the remote control is being used, it may cause a malfunction due to interference of the remote control frequency.

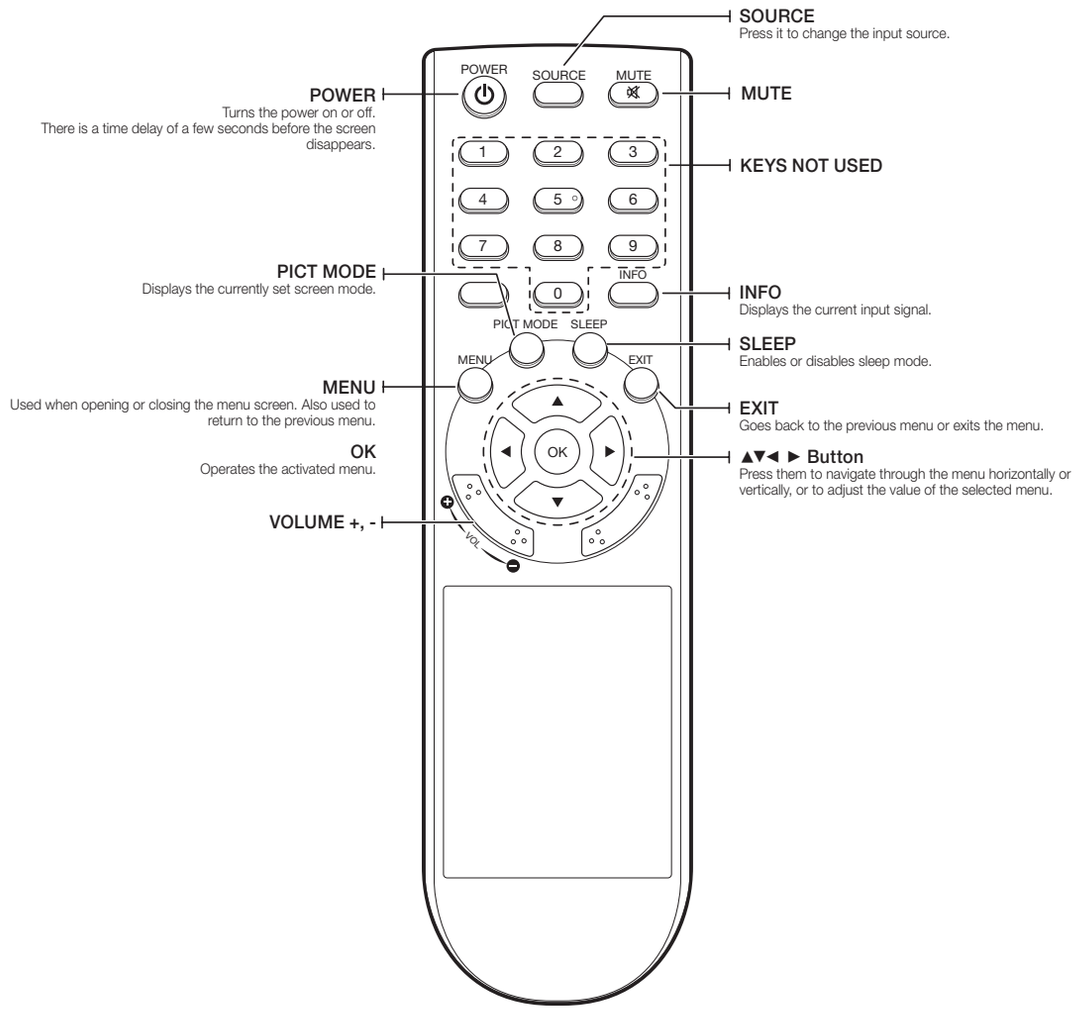

Inserting batteries

Slide the battery cover off the remote controller in the direction of the arrow.
Insert 2 alkaline batteries (1.5V, AAA) with the +/- poles in the correct direction.

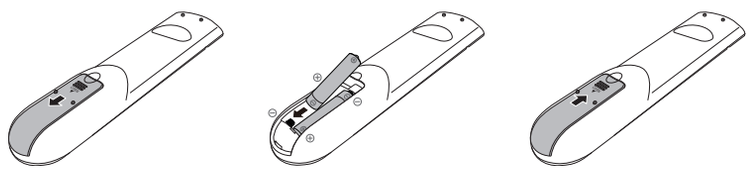

Please take note of the followings before using this product.

- Do not use the product outdoor.
- Do not spill water or liquid in the connection part of the product.
- Do not impose the system to excessive shock or force.
- Do not pull out the power plug forcefully.
- Do not disassemble the product on your own.
- Do not exceed the rated input/output range.
- Use a certified power cord only.
- For the product with an input ground, use a grounded power plug.

BEFORE INSTALLING THE PRODUCT

Ventilation requirement

Installing the product in an environment where the air does not circulate well could cause product damage due to increased temperature. Make sure to secure enough space around the product for proper air ventilation.

Vertical wall mount condition

A. Minimum 40 mm

B. Ambient temperature Measuring point <35°C

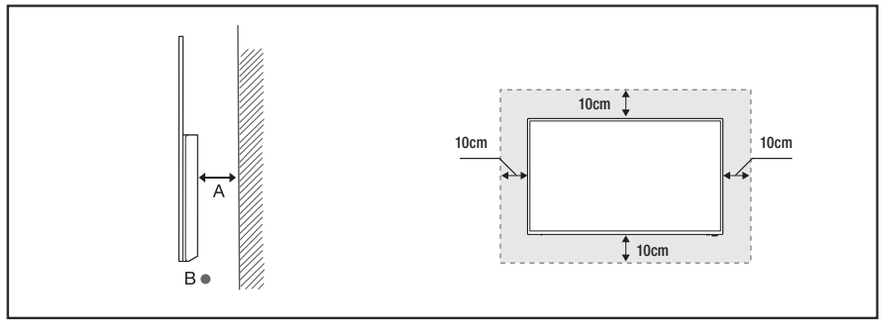

INSTALLING WALL MOUNT PARTS

Installing Wall Mount Kits

The wall mount kit (sold separately) allows you to hang the product on a wall.

For more information on wall mounting, refer to the owner's manual supplied with the wall mount parts. When installing the wall mount, seek the help of a technician.

Hanwha Techwin is not responsible for any damage to the product or injury to the user or others caused by any accident due to a user's attempt to install the product.

Wall Mount Kit Specifications (VESA)

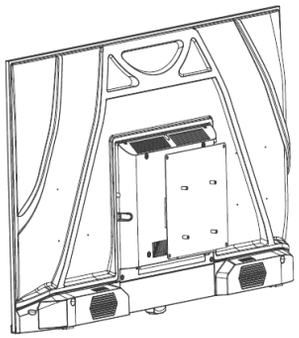

- Install the wall mount kit on a solid wall perpendicular to the floor.
- Please refer to the nearest store when installing on other materials.
- Installing on an inclined wall may cause the product to fall, which can result in serious injury.
- When using a VESA mount, select a product that can hold 4 times the weight of the monitor.

- When you purchase our wall mount kit, you will find a detailed installation guide and all parts required for assembly.
- Do not use screws that are longer than the standard dimensions or that do not conform to the VESA standard screw specifications. Using screws that are too long may damage the inside of the product.
- For wall mount parts that do not conform to the VESA standard screw specifications, the screw length may vary depending on the wall mount specifications.
- Do not over-tighten the screws. The product may be damaged, or may fall, resulting in injury.
  Hanwha Techwin is not responsible for any damage to the product or injury to the user or others caused by any accident due to a user's attempt to install the product.
- Hanwha Techwin is not responsible for damage to the product or injury to the user caused by using non-compliant or non-VESA wall mount parts, or by the customer not following the product installation instructions.
- When hanging on a wall, two people should always lift the product.
- The standard dimensions of the wall mount kit are shown in the table below. [Unit: mm]

Model name	VESA dimensions (A * B)	Standard screws	Quantity
SMT-4345	100 x 100 /200 x 200	M4/L12	4

- Do not install the wall mount kit with the product turned on. This may lead to injury due to electric shock.

THINGS TO CHECK BEFORE CONNECTION

Check before connecting

- When connecting, refer to the instruction manual of the product to be connected. The number and position of external devices may differ depending on the product.
- Do not connect the power until all connections are complete. Connecting the power supply during connection may damage the product.
- Check the type of terminal behind the product you want to connect.

CONNECTING WITH EXTERNAL DEVICES

- Connect the power cable after all cables have been connected.
  Disconnect the power cable before connecting external devices.
- You can connect the product to external devices in various ways.
  Select the correct connection method for your external devices.

- After connecting the external device, select the connected external device by pressing the [**SOURCE**] button on the remote control.

HDMI cable connection method

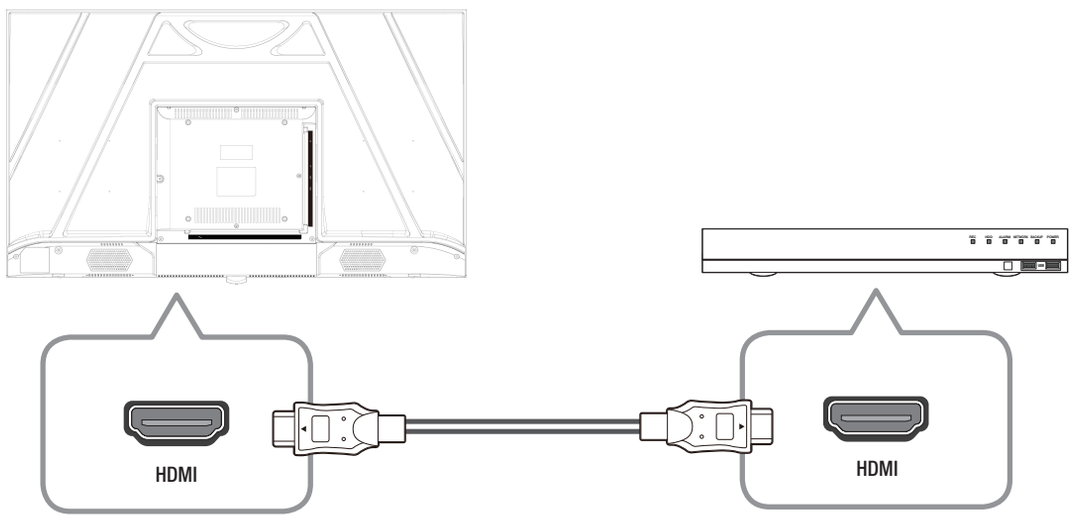

DP cable connection method

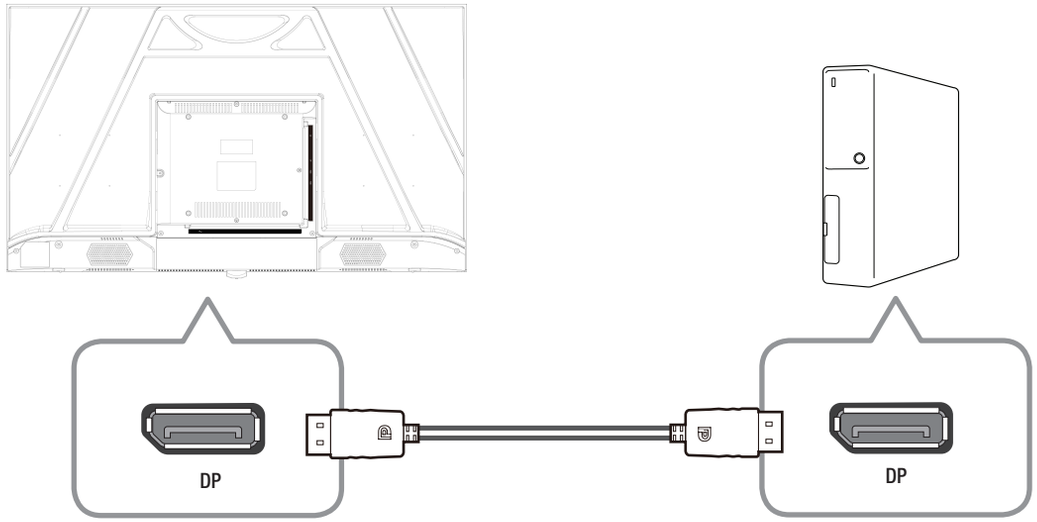

Audio cable connection method

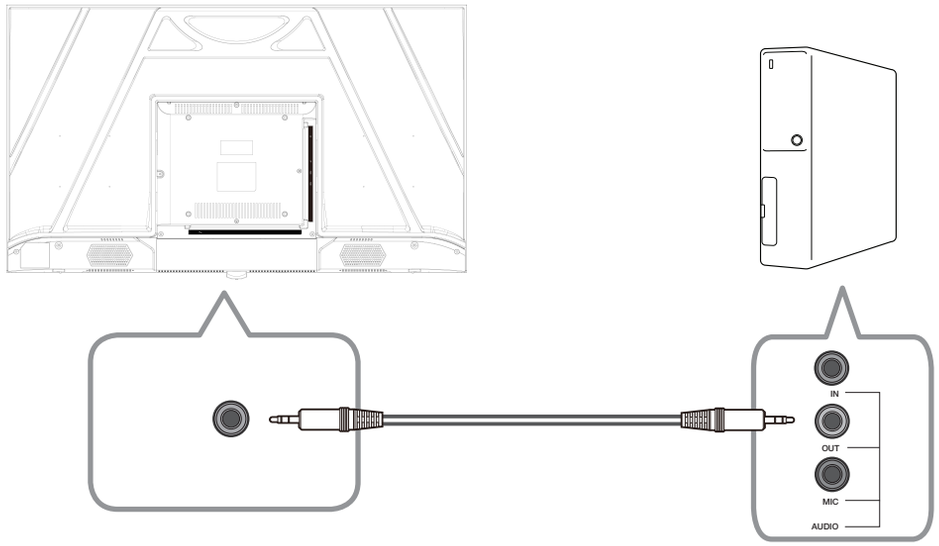

CONNECTS POWER

Plug the power cable in the socket.

Press the power button on the back of the monitor or press the power button on the remote controller to turn on the power.

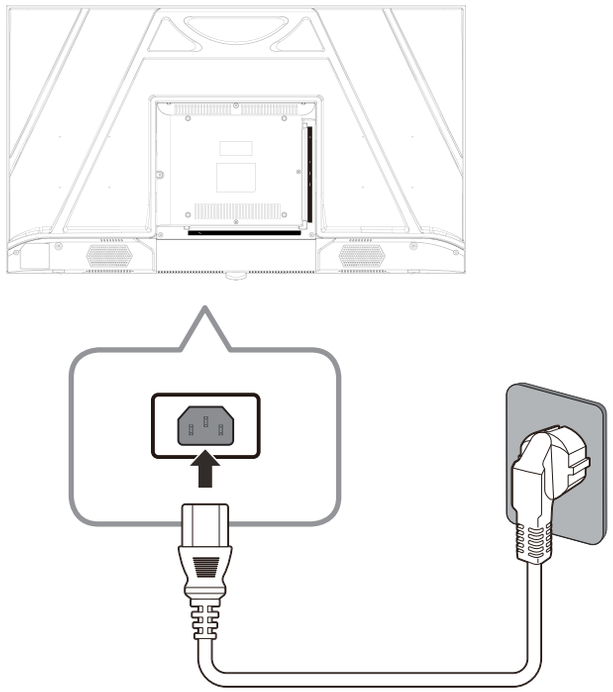

HDMI cable connection method

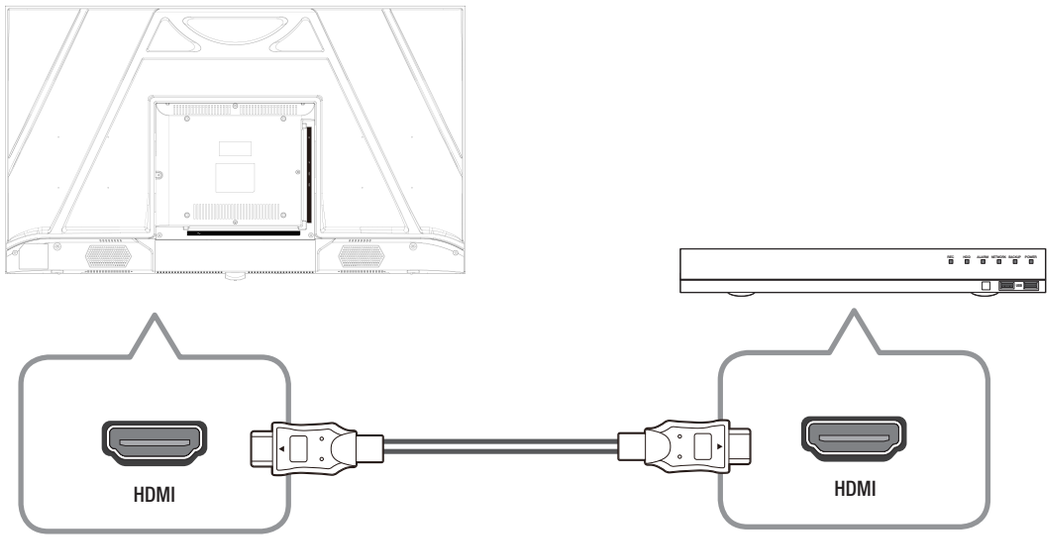

menu settings

The screen adjustment menu can be set.

SCREEN (OSD) MENU SETTINGS

Selecting external input menu

You can select the input mode by pressing the [**SOURCE**] button on the remote controller or through menu settings.

- HDMI : Select this when connected to a HDMI device.
- DP : Select this when connected to a DP device.

- If the selected input signal and external input are different, the screen may appear abnormal.

Selecting OSD menu

You can select the OSD menu by pressing the [**MENU**] button on the remote controller .

1. Press the [**MENU**] button to display the main menu.
2. Press the ▲/▼ buttons to select the main menu, and then press the [**OK**] button.
3. Press the ▲/▼ buttons to select the sub-menu, and then press the [**OK**] button.
4. Press the ▲/▼ buttons to select your desired menu, and then press the [**OK**] button.
   (For the adjustment menu, press the ◄/► buttons to adjust the adjustment value.)
5. Press the [**MENU**] button to exit.

- To return to the previous screen, press the [**MENU**] button.
- If you do not press any buttons for a certain period of time, the OSD menu screen will disappear.
  - You can set the time up to 60 seconds in <**OSD settings**> ➞ <**OSD time out**>.

VIDEO SETTINGS

Sets the screen brightness, color, etc.

1. Press the [**MENU**] button to enter the main menu.
2. Press the ▲/▼ button to select [ ] icon, and then press the [**OK**] button.

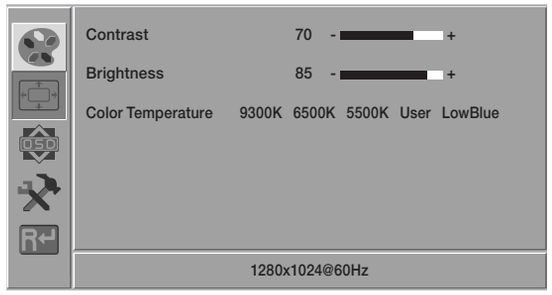

- Contrast : Adjusts the difference in brightness between the object and the environment.
- Brightness : Adjusts the brightness of the screen.
- Color Temperature : The color temperature can be adjusted and used depending on the monitor color.
  You can select from 9300k, 6500k, 5500k, User, or LowBlue.
  - User : Red/Green/Blue values can be adjusted manually.
  - LowBlue : Low Blue Light mode can be selected.
    Blue light decreases based on the selected level.

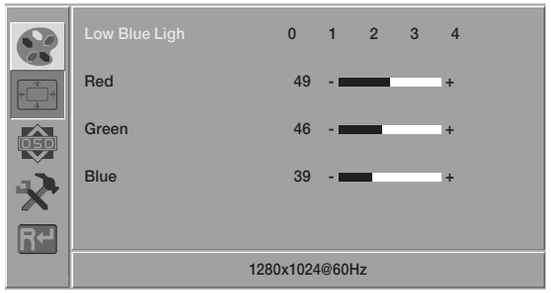

OSD SETTINGS

Sets up OSD values.

1. Press the [**MENU**] button to enter the main menu.
2. Press the ▲/▼ button to select [ ] icon, and then press the [**OK**] button.

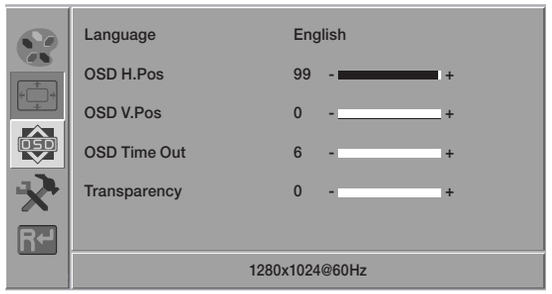

- Language : Select the screen language. The initial value is set to <**English**>.
- OSD H.Pos : Moves the screen of the menu to the left or right.
- OSD V.Pos : Moves the screen position of the menu up or down.
- OSD Time Out : The menu screen disappears if the screen does not change for a certain period of time.
- Transparency : Sets the transparency of the menu screen.

SYSTEM SETTINGS

Configures the system.

1. Press the [**MENU**] button to enter the main menu.
2. Press the ▲/▼ button to select [ ] icon, and then press the [**OK**] button.

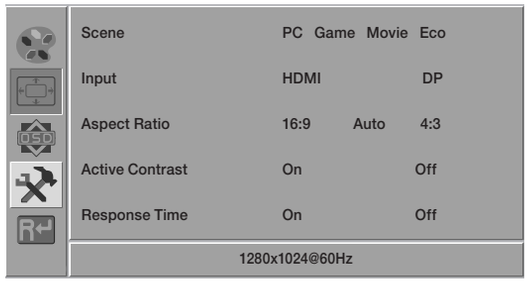

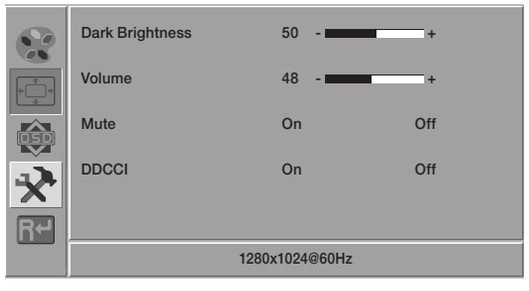

- Scene : Select a screen mode appropriate for your viewing environment.
  - PC : A screen mode appropriate for document editing and internet environment.
  - Game : A screen mode appropriate for games.
  - Movie : A screen mode appropriate for movies.
  - Eco : A screen mode that saves energy by adjusting the screen brightness.
- Input : You can select an input mode.
- Aspect Ratio : You can select a screen size you want.
  - 16:9 : Screen ratio is 16:9.
  - Auto : The optimal aspect ratio changes to 4:3 or 16:9 depending on the input signal.
  - 4:3 : Screen ratio is 4:3.
- Active Contrast : Setting Active Contrast to [**On**] adjusts the contrast of the screen.
- Response Time : Determines the use of the response time.
- Dark Brightness : Adjusts the dark intensity of the screen.
- Volume : Adjusts the volume.
- Mute : Determines the use of the mute function.
- DDCCI : Determines the use of the communication between computer and monitor.

RESET

Resets the monitor settings to default.

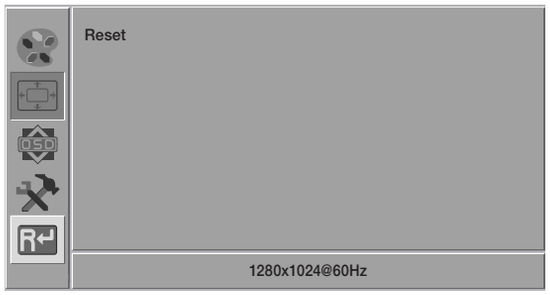

PRODUCT OVERVIEW

Unit : mm

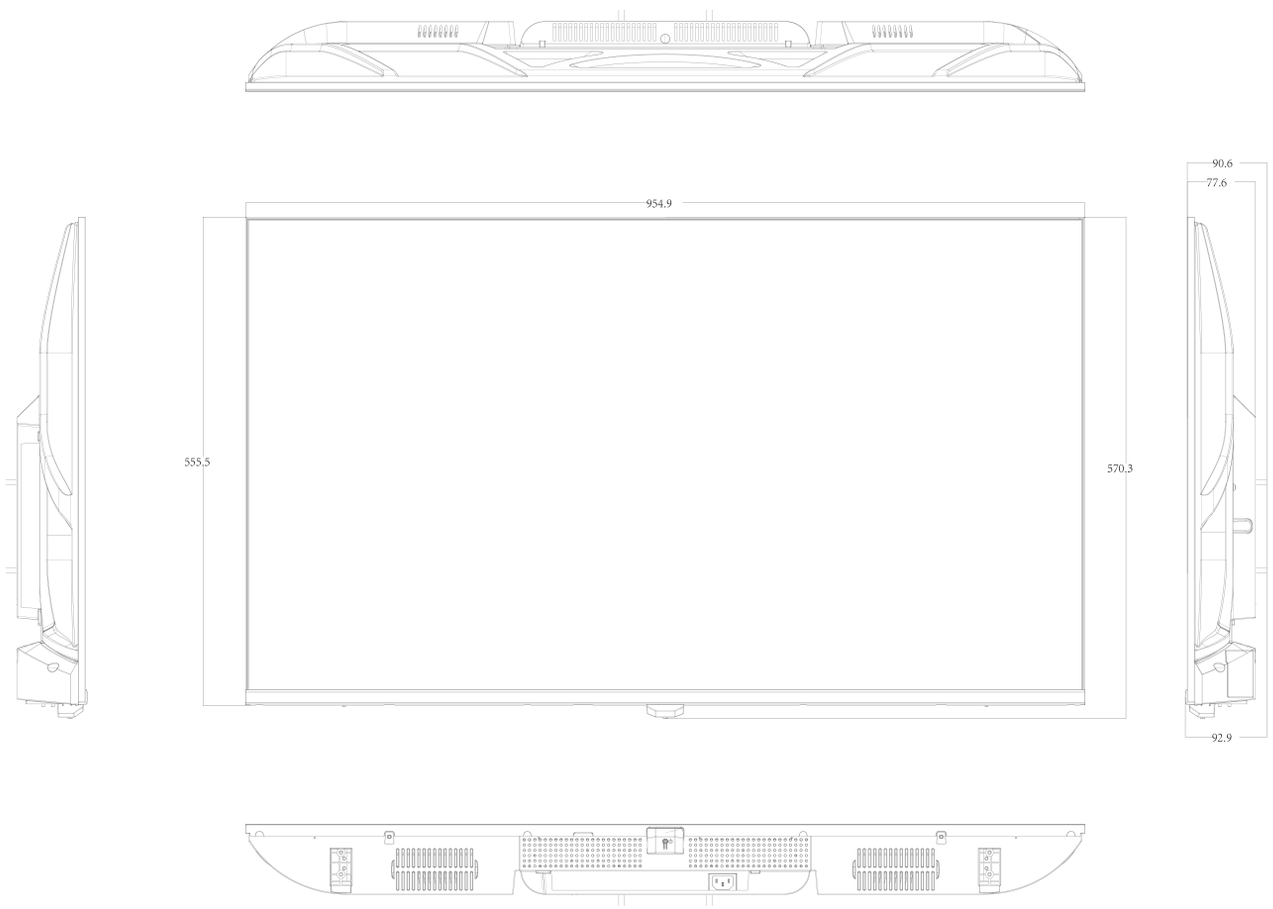

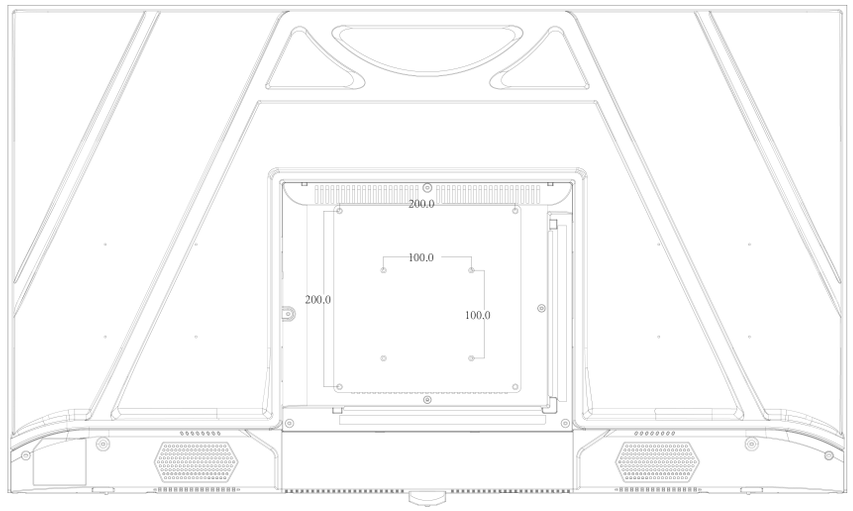

TROUBLESHOOTING

Problems and Symptoms	Troubleshooting
The screen appears and disappears repeatedly.	• Check the cable connection between the product and the external device, and check the locking status of the connection device.
The screen will not switch on.	• Confirm that the power cable is properly connected.
A "NO SIGNAL" message appears on the screen.	• Confirm that the cable is properly connected to the product. • Confirm that the power to the product is turned on.
The screen seems to be flowing down.	• Check the cable connected to the product.
The screen is too bright. The screen is too dark.	• Adjust the brightness and contrast.
The product spontaneously turns itself off.	• Confirm that the power cable is firmly connected to the product and to the power outlet.
The image on the screen appears strange.	• Video compression in scenes with fast transitions, such as sports or action movies, can cause screen distortion. • Low signal level or poor quality may cause screen distortion. This is not a product issue. • Cellular phones within a 1 meter radius may cause interference with analog/ digital products.
The brightness and color are strange.	• Adjust the screen options (Screen mode / Color depth / Brightness / Sharpness) using the screen menu. • Reset the screen with the default screen settings.
I can see a dotted line on the edge of the screen.	• If the screen is the original size, try changing it to 16:9.
I can see lines (red, green, blue) on the screen.	• This occurs due to a fault in the DATA SOURCE DRIVER IC of the monitor. Contact Hanhwa Techwin Service Center to solve the problem.
The screen is unstable and stops.	• Screen pauses may occur when the resolution is different from the recommended resolution, or when the signal is unstable. To solve this problem, change the resolution of the external device to the recommended resolution.
The image is not displayed on the full screen.	• Try adjusting the screen size option of the product or external device.
I cannot hear any sound.	• Check the connection of the audio cable or adjust the volume. • Check the volume.
The sound is too quiet.	• Try adjusting the volume.

Problems and Symptoms	Troubleshooting
The image appears but no sound plays.	• When using external devices ▪ Make sure that the audio cable is properly connected to the audio input terminal of the product. ▪ Check the audio output options of the external device. (For example, if HDMI is connected to the monitor, you may need to change the audio options of the cable box to HDMI.) • If the product is connected using a DVI to HDMI cable, you will need a separate audio cable. • Re-connect the device's power cable and reboot the connected device.
I can hear a strange noise from the speaker.	• Check the cable connections. Make sure that the video cable is not connected to the audio input. • If the cable is connected, check the signal strength. • Sound may be distorted due to a low signal level.
Even when I change the sound mode, the monitor sound remains the same.	• The sound settings of the main speakers are independent of the product's internal speakers. In other words, the sound settings of the external device do not affect the internal speaker sound.
The remote control does not work.	• Confirm that the +/- alignment of the batteries is correct. • Check whether the batteries are dead. • Make sure it is blackout. • Make sure the power cable is connected. • Make sure that the special fluorescent and neon sign light is on nearby.
The product smells of plastic.	• This is a normal smell, and will disappear over time.
Audio or video is intermittently interrupted.	• Check the cable connection and try again. • If you use cables that are too stiff or too thick, you may lose your audio or video connection. Make sure the cable is flexible enough to last a long time. When mounting the product on a wall, it is recommended to connect a 90 degree bent cable.
When connected with a DVI-HDMI cable in HDMI mode, the speaker does not sound.	• The connection via the DVI cable does not transmit any audio data. Therefore, you must connect the audio cable to the appropriate input jack for audio playback.
I cannot hear any sound in HDMI mode.	• If you connect an external device that supports some lower versions of HDMI to a product that supports the latest HDMI standard, the colors displayed on the screen may not be normal, or the audio or video may not play. If this happens, connect both the HDMI cable and a separate audio cable.

Hanwha Techwin cares for the environment at all product manufacturing stages, and is taking measures to provide customers with more environmentally friendly products.
The Eco mark represents Hanwha Techwin's devotion to creating environmentally friendly products, and indicates that the product satisfies the EU RoHS Directive.

Correct Disposal of This Product (Waste Electrical & Electronic Equipment)

(Applicable in the European Union and other European countries with separate collection systems)

This marking on the product, accessories or literature indicates that the product and its electronic accessories (e.g. charger, headset, USB cable) should not be disposed of with other household waste at the end of their working life. To prevent possible harm to the environment or human health from uncontrolled waste disposal, please separate these items from other types of waste and recycle them responsibly to promote the sustainable reuse of material resources.

Household users should contact either the retailer where they purchased this product, or their local government office, for details of where and how they can take these items for environmentally safe recycling.

Business users should contact their supplier and check the terms and conditions of the purchase contract. This product and its electronic accessories should not be mixed with other commercial wastes for disposal.

Correct disposal of batteries in this product

(Applicable in the European Union and other European countries with separate battery return systems.)

This marking on the battery, manual or packaging indicates that the batteries in this product should not be disposed of with other household waste at the end of their working life. Where marked, the chemical symbols Hg, Cd or Pb indicate that the battery contains mercury, cadmium or lead above the reference levels in EC Directive 2006/66. If batteries are not properly disposed of, these substances can cause harm to human health or the environment.

To protect natural resources and to promote material reuse, please separate batteries from other types of waste and recycle them through your local, free battery return system.

Hanwha
Vision

Photographs-01 Page-1

Photographs-02 Page-1

Photographs-03 Page-1

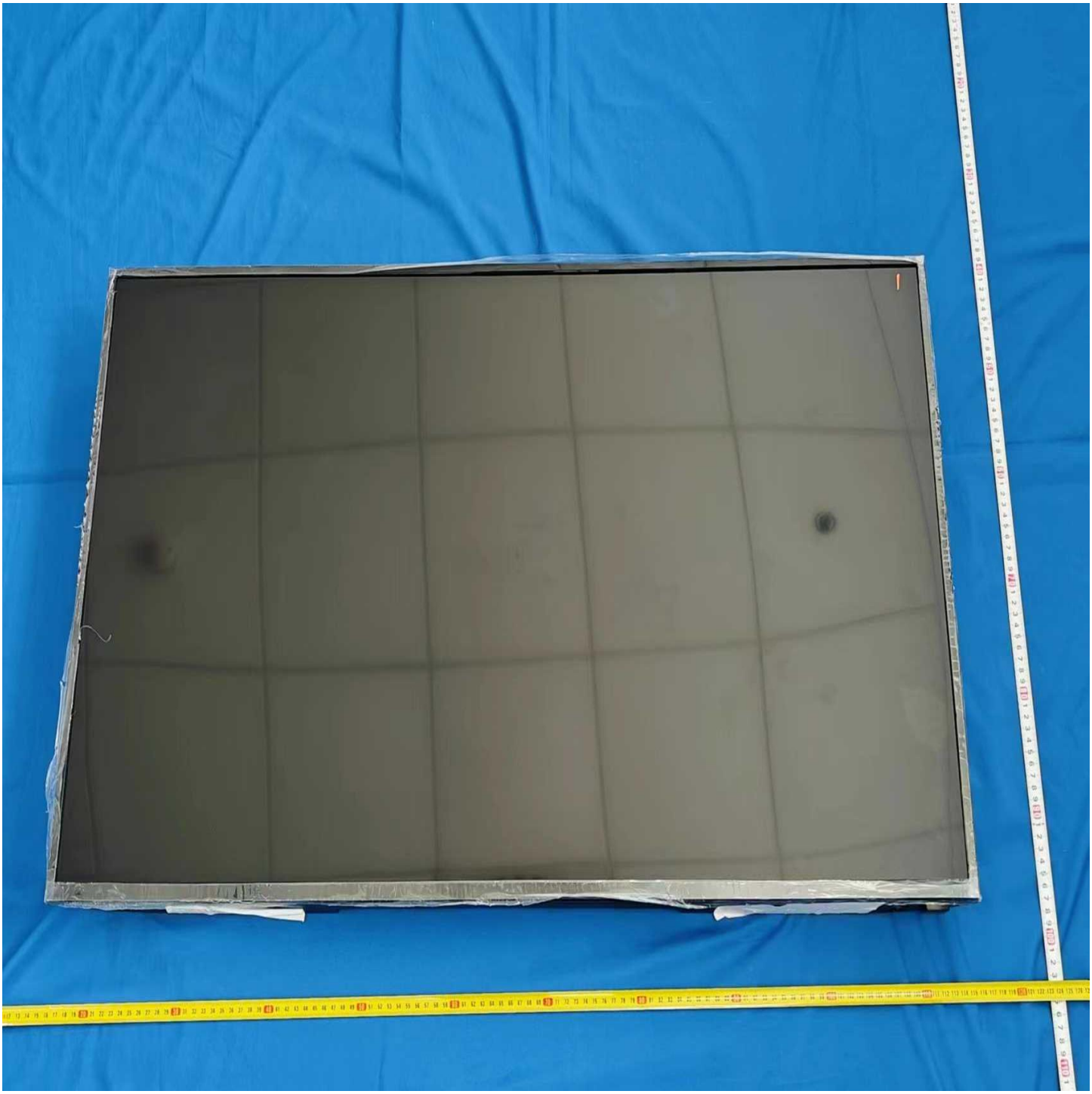

Photographs-04 Page-1

Photographs-05 Page-1

Photographs-09 Page-1

Photographs-10 Page-1

Photographs-11 Page-1

Photographs-12 Page-1

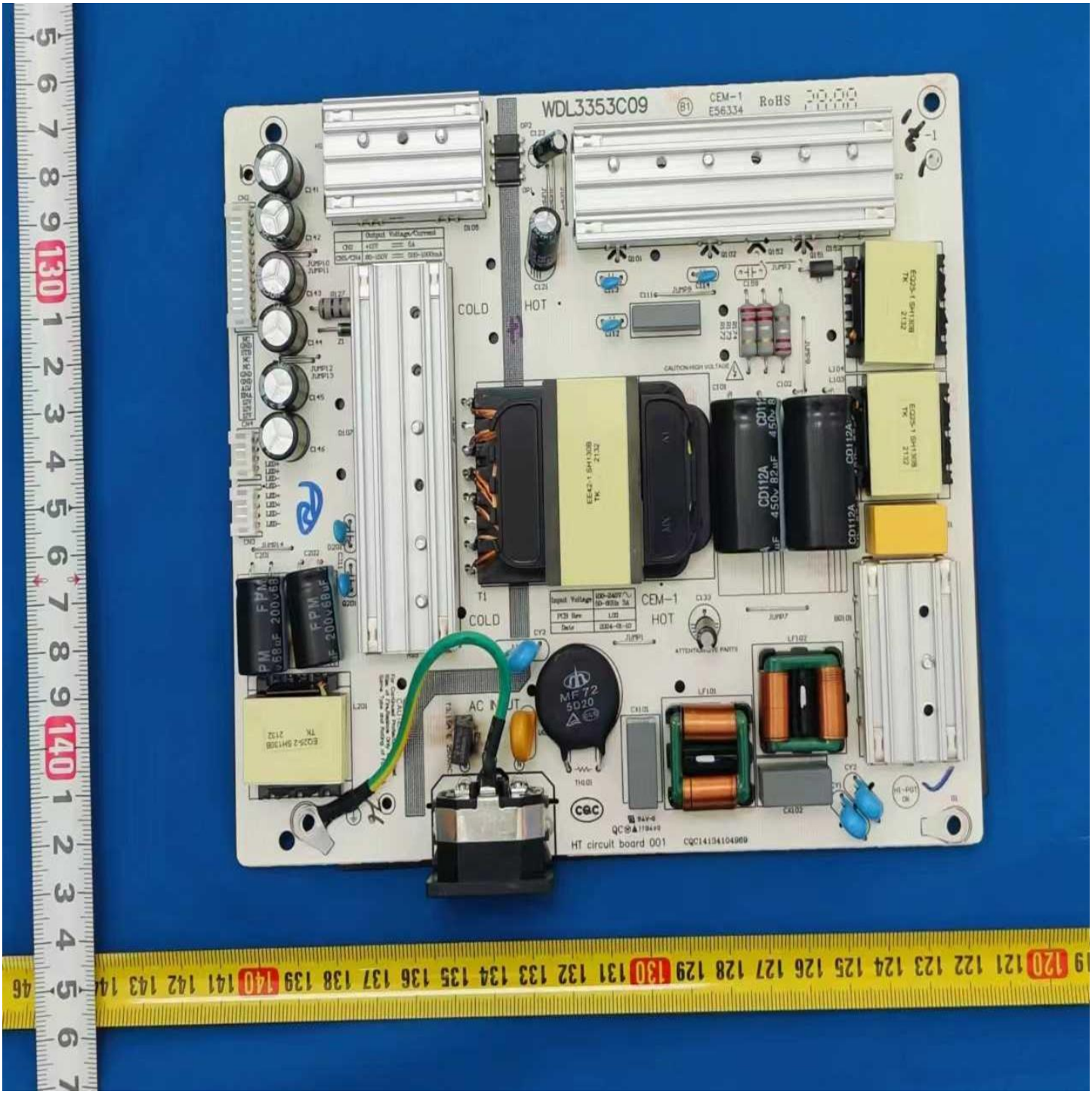

Photographs-13 Page-1

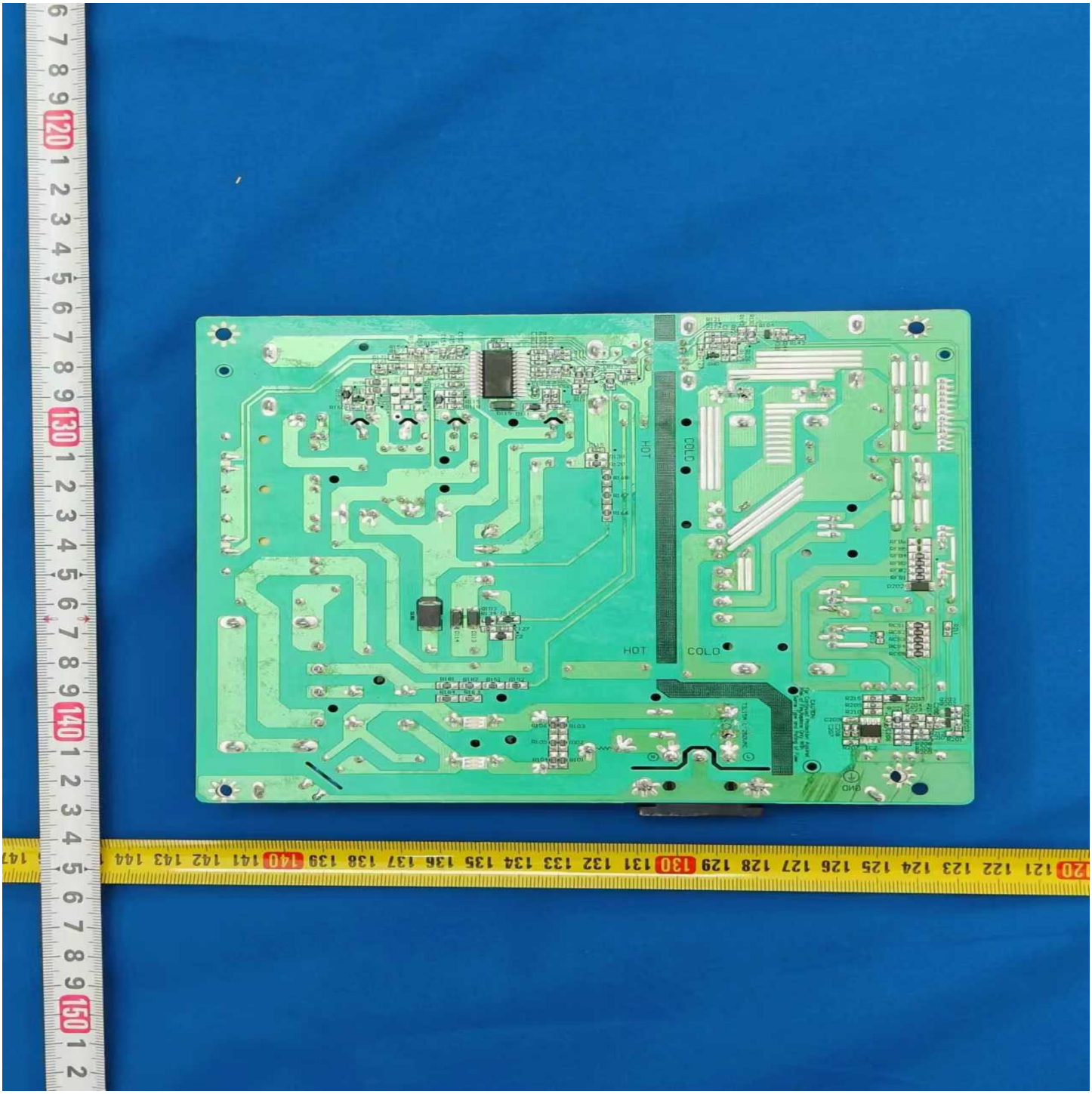

Photographs-14 Page-1

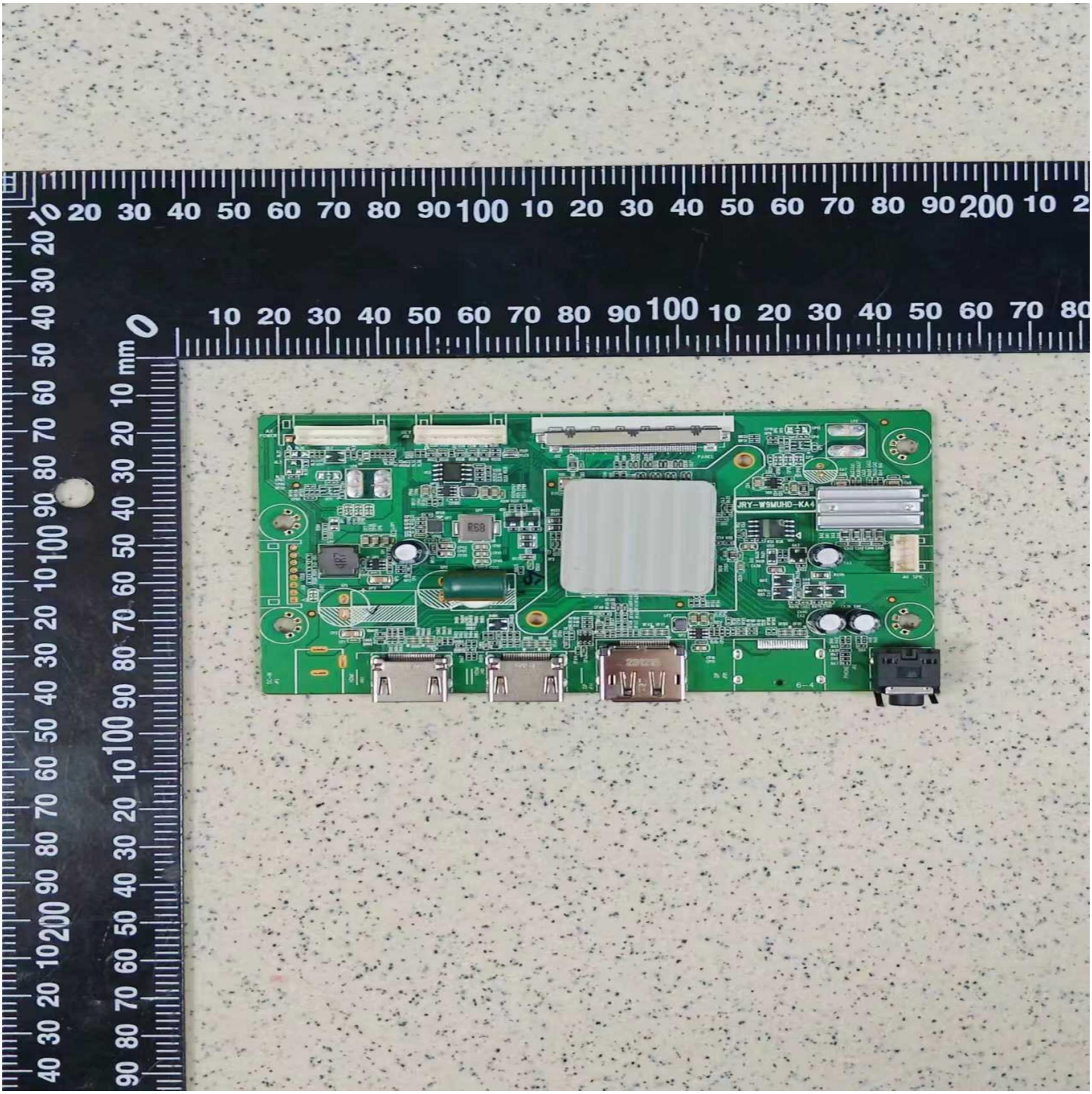

Photographs-15 Page-1

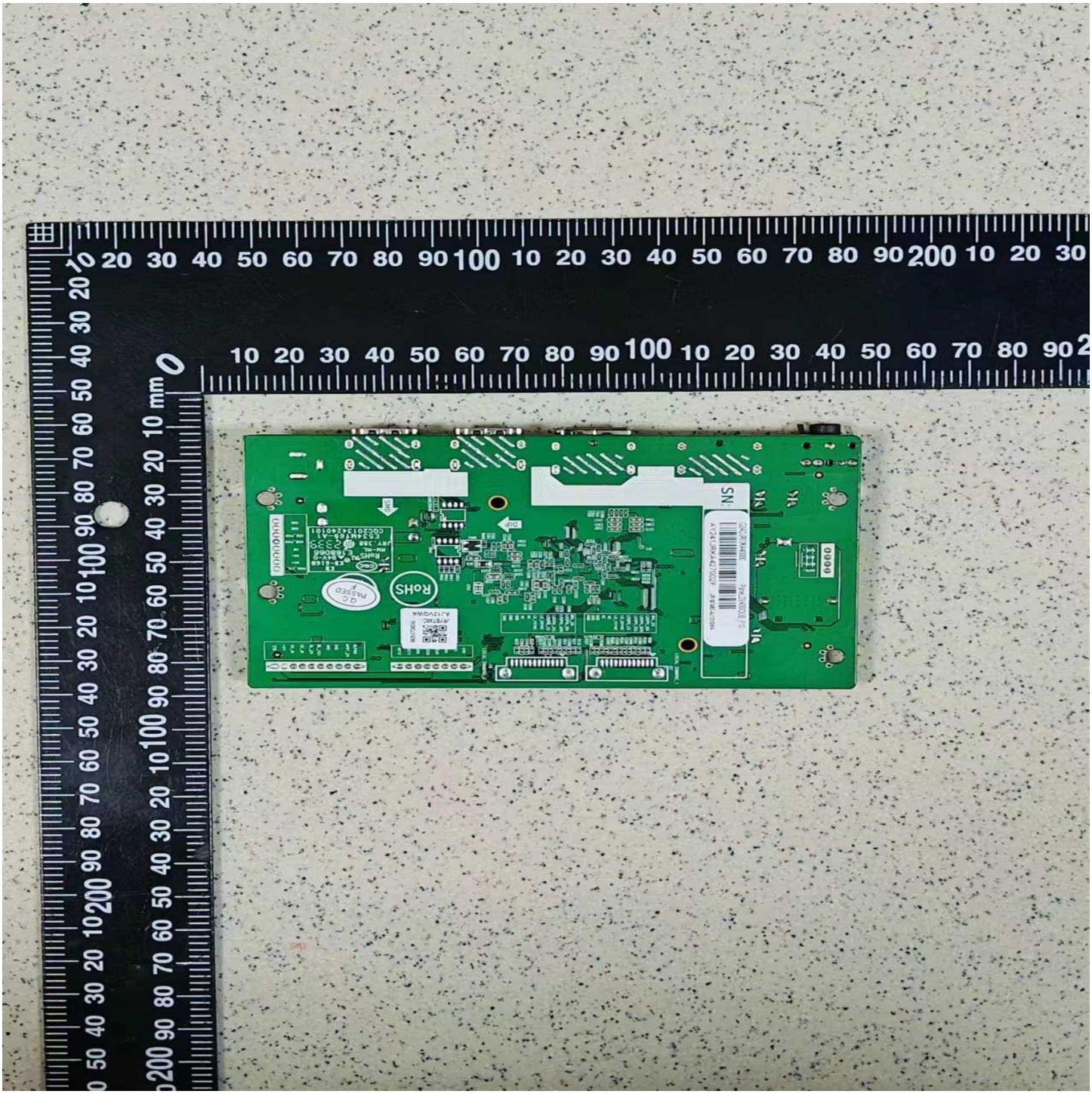

Photographs-16 Page-1

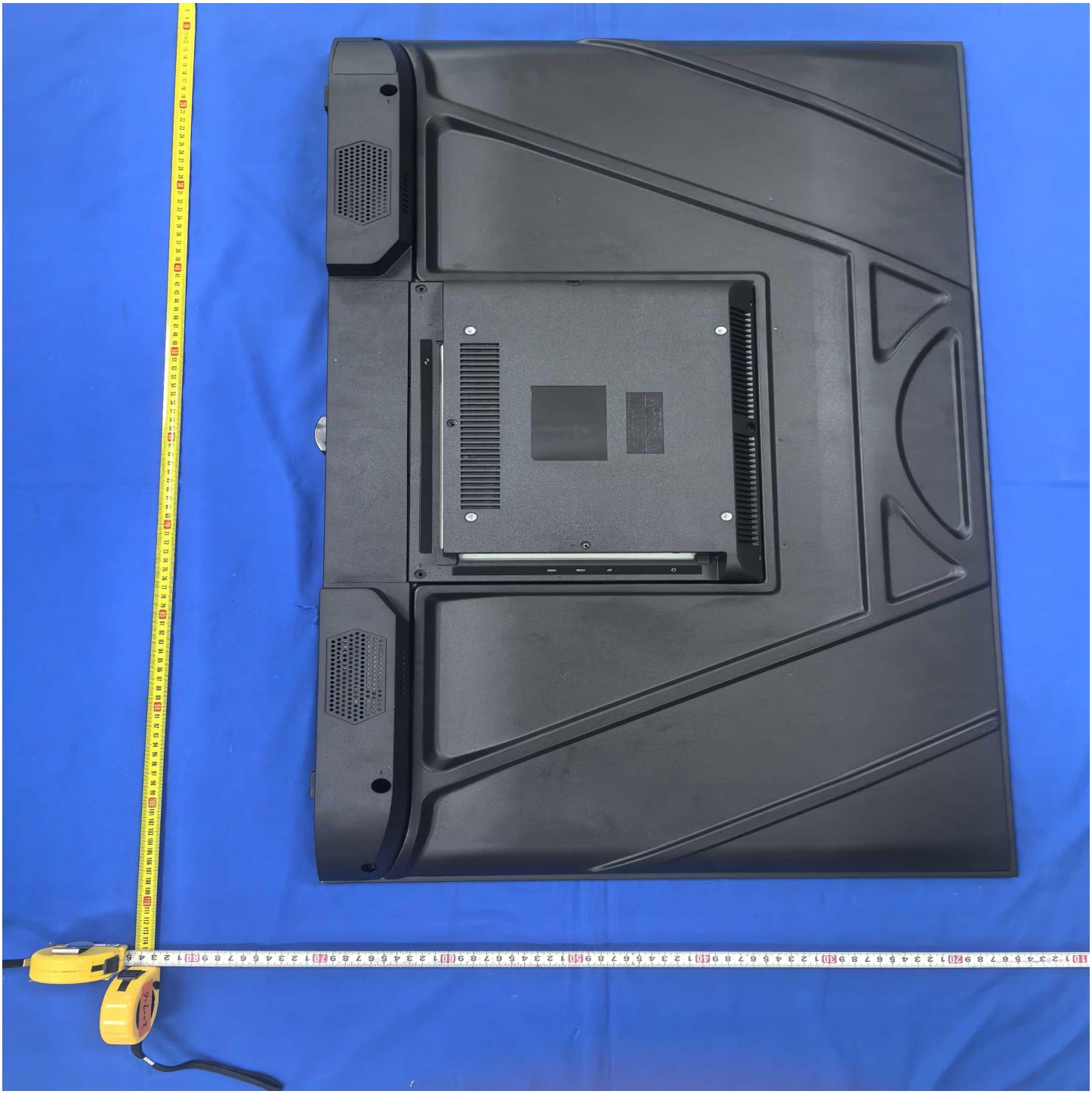

Photographs-17 Page-1

Photographs-18 Page-1

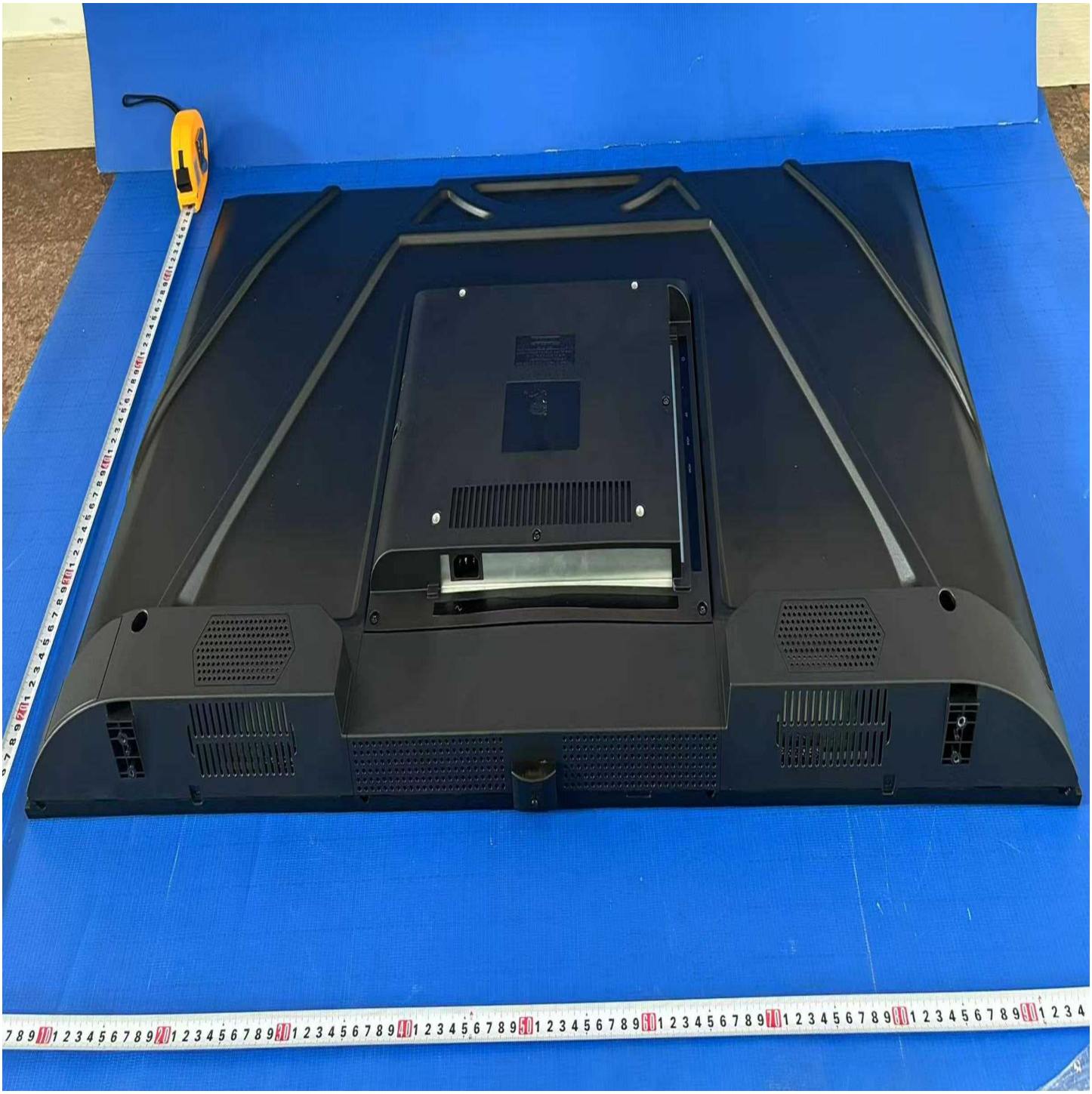

Photographs-19 Page-1

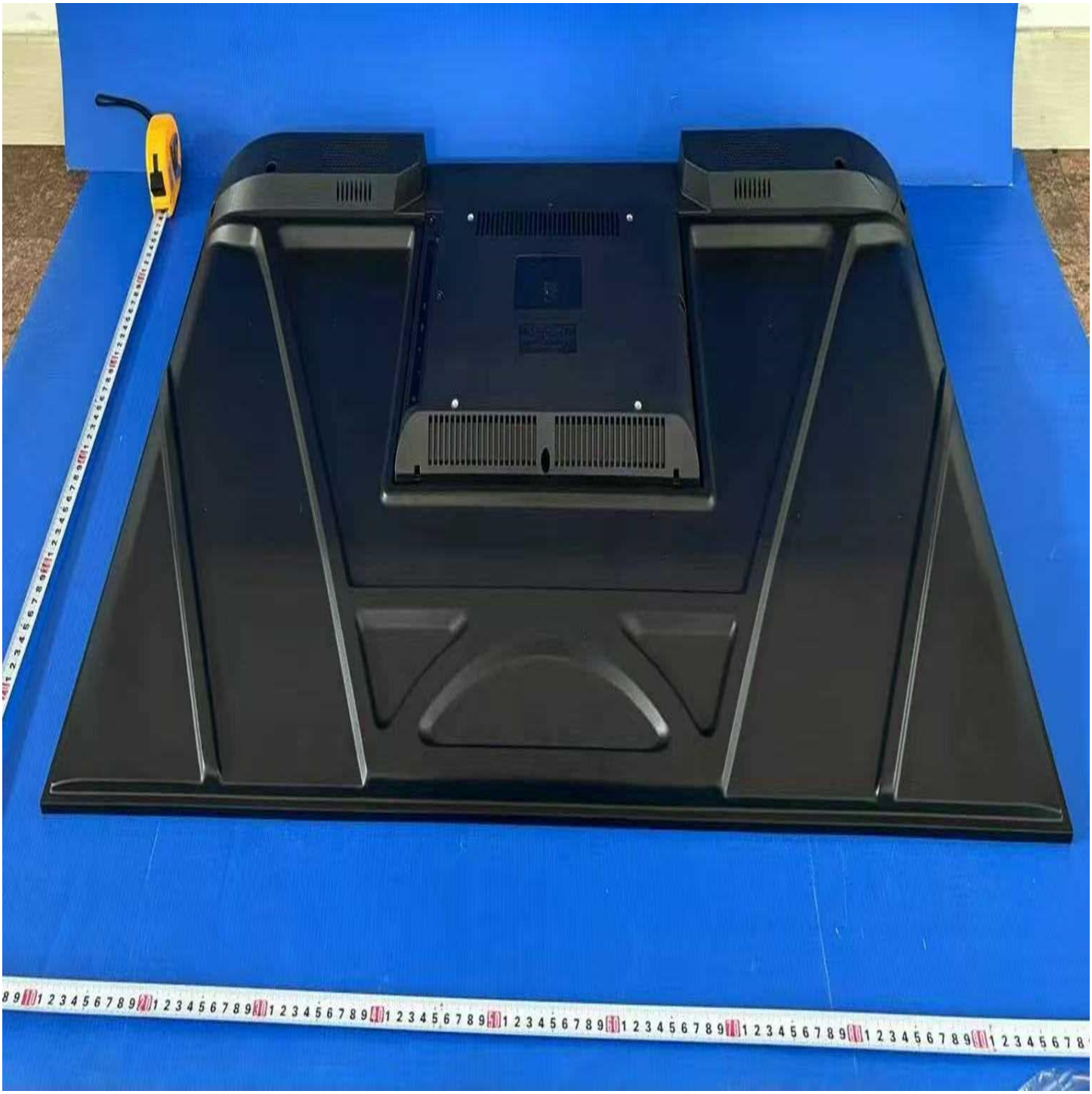

Photographs-20 Page-1

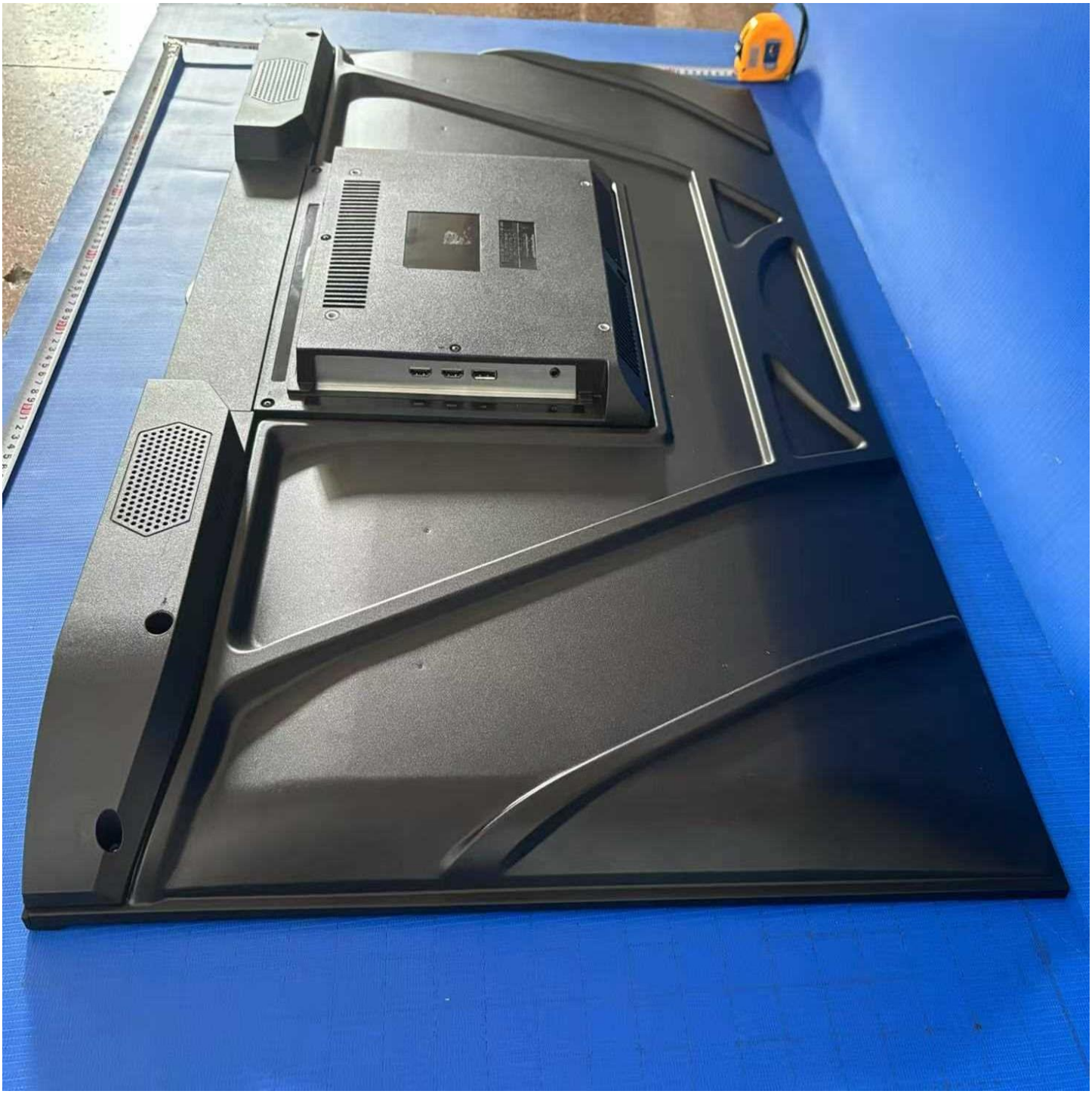

Photographs-21 Page-1

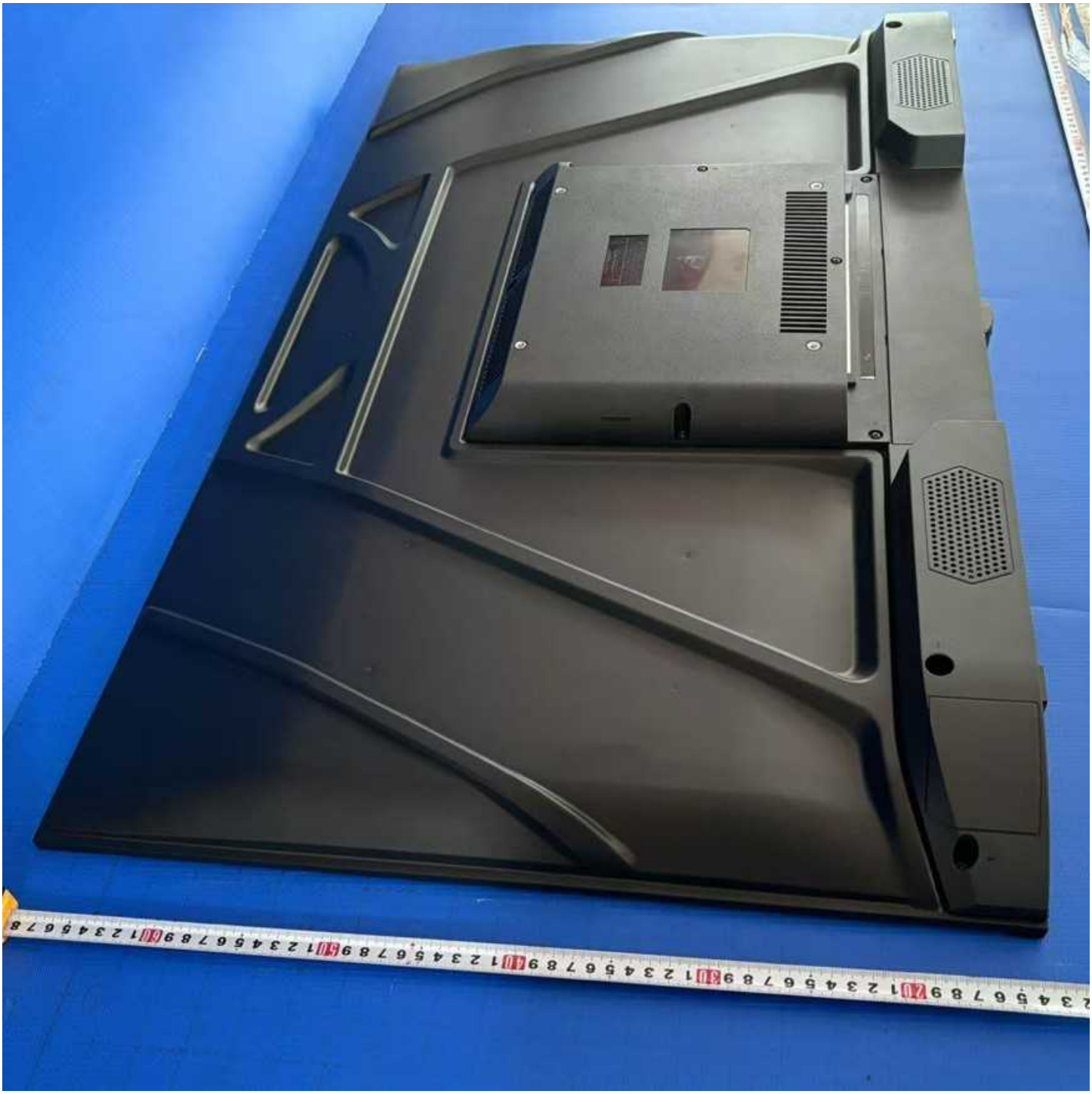

Photographs-22 Page-1

Photographs-23 Page-1

Photographs-24 Page-1

Photographs-25 Page-1

The following Page(s) are related to Schematics-01. The next supplement, if applicable, will be identified with a new Supplement Page Heading.

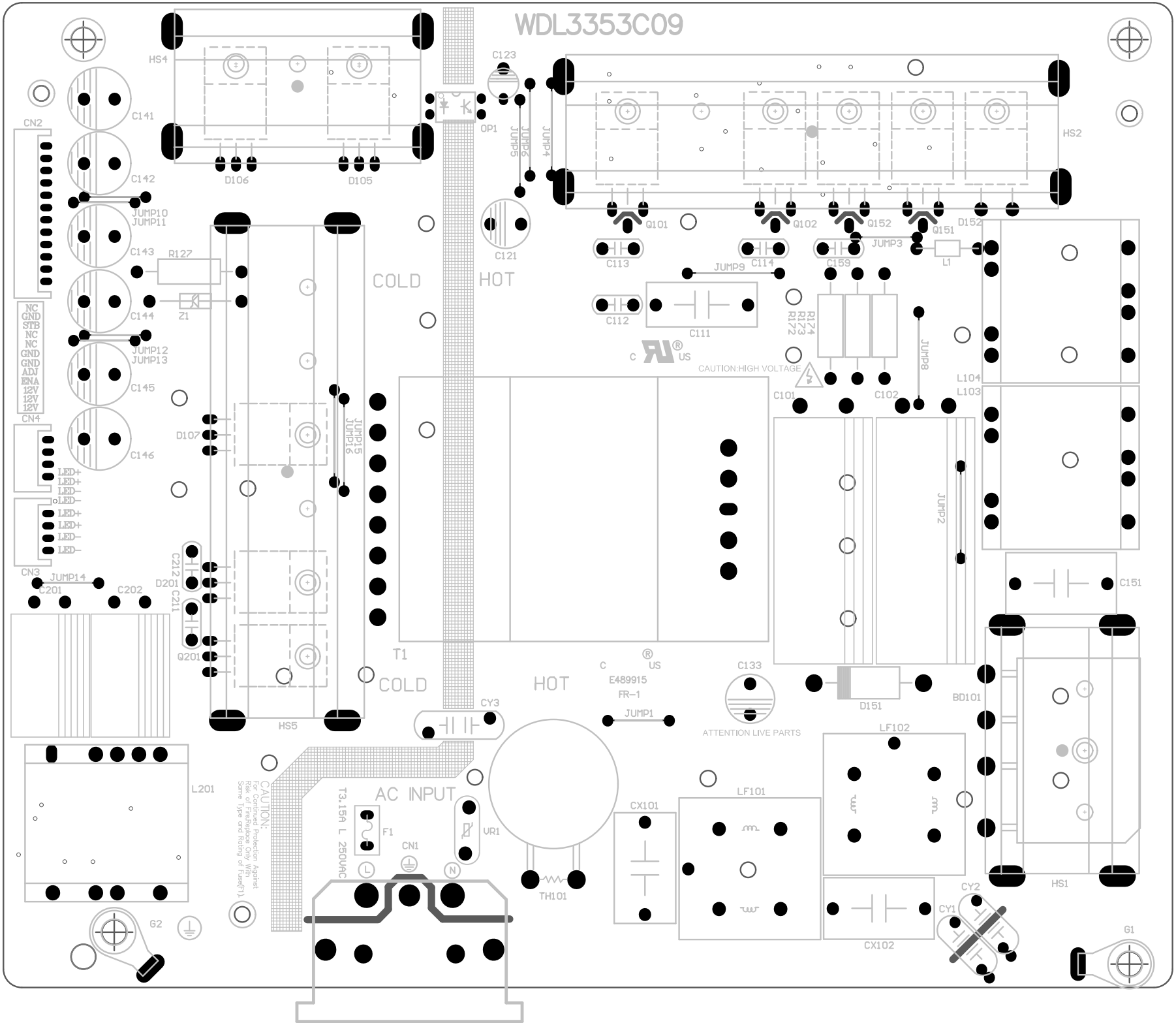
WDL3353C09
HS4
C123
OP1
JUMP5
JUMP6
JUMP4
HS2
C141
CN2
D106
D105
C142
JUMP10
JUMP11
Q101
Q102
Q152
Q151
D152
C143
R127
C121
C113
C114
C159
JUMP3
L1
JUMP9
COLD
HOT
C144
Z1
C112
C111
R174
R173
R172
JUMP8
NC
GND
STB
NC
NC
GND
GND
ADJ
ENA
12V
12V
12V
JUMP12
JUMP13
CAUTION:HIGH VOLTAGE
C101
C102
L104
L103
C145
CN4
D107
JUMP15
JUMP16
C146
LED+
LED+
LED−
LED−
LED+
LED+
LED−
LED−
JUMP2
C212
D201
C211
Q201
CN3
JUMP14
C201
C202
C151
T1
C133
D151
BD101
E489915
FR-1
JUMP1
ATTENTION LIVE PARTS
CY3
HS5
LF102
L201
AC INPUT
T3.15A L 250VAC
F1
CN1
VR1
CX101
LF101
TH101
CAUTION:
For Continued Protection Against
Risk of Fire, Replace only with
Same Type and Rating of Fuse(F1).
HS1
CY2
CY1
CX102
G2
G1

The following Page(s) are related to Schematics-02. The next supplement, if applicable, will be identified with a new Supplement Page Heading.

HOT
COLD
HOT
COLD
T3.15A L 250VAC
CAUTION:
For continued Protection Against
Fire, replace only with
same Type and Rating of fuse